CHARTER TOWNSHIP OF YPSILANTI BOARD OF TRUSTEES

Supervisor

BRENDA L. STUMBO

Clerk

HEATHER JARRELL ROE

Treasurer

STAN ELDRIDGE

Trustees

RYAN HUNTER
JOHN P. NEWMAN II
GLORIA PETERSON
DEBBIE SWANSON

August 15, 2023

Work Session – 5:00 pm
Regular Meeting – 7:00 p.m.

Ypsilanti Township Civic Center
7200 S. Huron River Drive
Ypsilanti, MI 48197

DEPARTMENTAL REPORTS

CHARTER TOWNSHIP OF YPSILANTI FIRE DEPARTMENT

222 South Ford Boulevard, Ypsilanti, MI 48198

MONTHLY REPORT FOR JULY, 2023

Fire Department staffing levels are as follows:

1 Fire Chief	3 Shift Captains	16 Fire Fighters
1 Fire Marshal	3 Shift Lieutenants	1 Clerk III/Staff Support

All fire department response personnel are licensed as Emergency Medical Technicians by the State of Michigan Public Health. During the month, the fire department responded to requests **495** for assistance. Of those requests, **277** were medical emergency service calls, with the remaining **218** incidents classified as non-medical and/or fire related.

Department activities for the month of July 2023:

1) Smoke Alarms
    a) 835 Lamay Avenue
    b) 1211 Rambling

2) Fire fighters received training in the following areas:

3) Pub Education
    a) Bike Parade & Truck Demo
    b) 4th of July Parade
    c) Ypsilanti Township Rosie Show @North Bay Park

The Fire Marshal had these activities / events for the month of July 2023:

1. Fire Investigations:
2. Fire Investigations interview:
3. Fire Investigations follow up:
4. Food Truck Development Program:
5. Building Inspections: 32
6. Building Re-inspections:
7. Business Tour:
8. Plan Reviews: 9
9. Hood / Fire Suppression Inspections: 3
10. Meetings: 5
11. Fire Alarm Inspections: 1
12. Occupant Load Certificates: 2
13. Burn Permit: 1
14. Burn Complaints: 3
15. Knox Box:
16. Fire Department Site Tours:
17. Training:
18. Business/Community Engagement:
19. Citizen Engagement: 2
20. Safety Inspections:
21. Addressing: 2
22. Code Research: Weekly

The Fire Chief attended these meetings / events for the month of July 2023:

Chief Copeland has retired from Ypsilanti Township Fire Department

There was 0 injuries and 0 deaths reported this month for civilians.
There was 0 injuries and 0 deaths reported this month for fire fighters.

This month the total fire loss, including vehicle fires, is estimated at ***$139,300.00.*** All occurred at the following locations:

DATE OF LOSS	ADDRESS	ESTIMATED LOSS	
1) 7/01/2023	1035 Washtenaw	$ .00	(Building Fire)
2) 7/04/2023	549 Woburn	$ .00	(Trash/rubbish fire)
3) 7/5/2023	2305 Shelly	$ 75,000.00	(Building Fire)
4) 7/5/2023	2881 Bynan Drive	$ 800.00	(Cooking Fire)
5) 7/5/2023	48850 Denton	$ .00	(Mutual Aid-Van Buren)
6) 7/5/2023	5065 Bosuns Way	$ .00	(Trash/rubbish Fire)
7) 7/5/2023	7791 Hampton	$ 25,000.00	(Vehicle fire)
8) 7/13/2023	312 N. River	$ 0.00	(Mutual Aid-Ypsi City)
9) 7/15/2023	2511 International	$ 0.00	(Cooking Fire)
10)7/20/2023	1282 Medford	$ 8,500.00	(Buidling Fire)
11)7/21/2023	1262 E Cross	$ 30,000.00	(Building Fire)
12)7/22/2023	Tyler Road	$ 0.00	(Trash Fire)
13)7/28/2023	8539 Barrington Drive	$ 0.00	(Mutual Aid-Superior)
14)7/31/2023	11150 Oak	$ 0.00	(Mutual Aid-Van Buren)

Respectfully submitted,

Maria Batianis
Charter Township of Ypsilanti Fire Department

Attachment: Image Trend Incident Type Report (Summary): 07/01/2023 – 07/31/2023

Incident Type Report (Summary) 2023

Basic Incident Type Code And Description (FD1.21)	Total Incidents	Total Incidents Percent of Incidents	Total Property Loss	Total Content Loss	Total Loss	Total Loss Percent of Total
Incident Type Category (FD1.21): 1 - Fire						
111 - Building fire	8	1.62%	70000.00	43500.00	113500.00	81.48%
112 - Fires in structure other than in a building	1	0.20%	0.00	0.00	0.00	0.00%
113 - Cooking fire, confined to container	2	0.40%	400.00	400.00	800.00	0.57%
118 - Trash or rubbish fire, contained	3	0.61%	0.00	0.00	0.00	0.00%
131 - Passenger vehicle fire	1	0.20%	25000.00	0.00	25000.00	17.95%
140 - Natural vegetation fire, other	1	0.20%				
142 - Brush or brush-and-grass mixture fire	1	0.20%				
150 - Outside rubbish fire, other	1	0.20%				
154 - Dumpster or other outside trash receptacle fire	2	0.40%	0.00	0.00	0.00	0.00%
	Total: 20	**Total: 4.04%**	**Total: 95400.00**	**Total: 43900.00**	**Total: 139300.00**	**Total: 100.00%**
Incident Type Category (FD1.21): 3 - Rescue & Emergency Medical Service Incident						
300 - Rescue, EMS incident, other	6	1.21%				
311 - Medical assist, assist EMS crew	132	26.67%				
320 - Emergency medical service, other	41	8.28%				
321 - EMS call, excluding vehicle accident with injury	77	15.56%				
322 - Motor vehicle accident with injuries	10	2.02%				
323 - Motor vehicle/pedestrian accident (MV Ped)	1	0.20%				
324 - Motor vehicle accident with no injuries.	8	1.62%				
350 - Extrication, rescue, other	1	0.20%				
352 - Extrication of victim(s) from vehicle	1	0.20%				
	Total: 277	**Total: 55.96%**	**Total: 0.00**	**Total: 0.00**	**Total: 0.00**	**Total: 0.00%**
Incident Type Category (FD1.21): 4 - Hazardous Condition (No Fire)						
400 - Hazardous condition, other	2	0.40%				
412 - Gas leak (natural gas or LPG)	1	0.20%				
424 - Carbon monoxide incident	6	1.21%				
440 - Electrical wiring/equipment problem, other	6	1.21%				
444 - Power line down	19	3.84%				
445 - Arcing, shorted electrical equipment	1	0.20%				
461 - Building or structure weakened or collapsed	1	0.20%				
	Total: 36	**Total: 7.27%**	**Total: 0.00**	**Total: 0.00**	**Total: 0.00**	**Total: 0.00%**
Incident Type Category (FD1.21): 5 - Service Call						
500 - Service call, other	6	1.21%				
510 - Person in distress, other	1	0.20%				
511 - Lock-out	1	0.20%				
522 - Water or steam leak	1	0.20%				
531 - Smoke or odor removal	4	0.81%				
541 - Animal problem	1	0.20%				
542 - Animal rescue	1	0.20%				
550 - Public service assistance, other	1	0.20%				
551 - Assist police or other governmental agency	2	0.40%				
552 - Police matter	1	0.20%				
553 - Public service	3	0.61%				
554 - Assist invalid	5	1.01%				
561 - Unauthorized burning	2	0.40%				

Basic Incident Type Code And Description (FD1.21)	Total Incidents	Total Incidents Percent of Incidents	Total Property Loss	Total Content Loss	Total Loss	Total Loss Percent of Total
	Total: 29	**Total: 5.86%**	**Total: 0.00**	**Total: 0.00**	**Total: 0.00**	**Total: 0.00%**
Incident Type Category (FD1.21): 6 - Good Intent Call						
600 - Good intent call, other	2	0.40%				
611 - Dispatched and cancelled en route	89	17.98%				
622 - No incident found on arrival at dispatch address	5	1.01%				
651 - Smoke scare, odor of smoke	2	0.40%				
	Total: 98	**Total: 19.80%**	**Total: 0.00**	**Total: 0.00**	**Total: 0.00**	**Total: 0.00%**
Incident Type Category (FD1.21): 7 - False Alarm & False Call						
700 - False alarm or false call, other	13	2.63%				
730 - System malfunction, other	1	0.20%				
733 - Smoke detector activation due to malfunction	2	0.40%				
735 - Alarm system sounded due to malfunction	6	1.21%				
736 - CO detector activation due to malfunction	1	0.20%				
740 - Unintentional transmission of alarm, other	1	0.20%				
743 - Smoke detector activation, no fire - unintentional	1	0.20%				
745 - Alarm system activation, no fire - unintentional	9	1.82%				
746 - Carbon monoxide detector activation, no CO	1	0.20%				
	Total: 35	**Total: 7.07%**	**Total: 0.00**	**Total: 0.00**	**Total: 0.00**	**Total: 0.00%**
	Total: 495	**Total: 100.00%**	**Total: 95400.00**	**Total: 43900.00**	**Total: 139300.00**	**Total: 100.00%**

Township Supervisor
Brenda L. Stumbo
Township Clerk
Heather Jarrell Roe
Township Treasurer
Stan Eldridge

YPSILANTI TOWNSHIP
— HYDRO DAM OPERATIONS —

Trustees
John Newman II
Gloria Peterson
Debbie Swanson
Jimmie Wilson Jr

Date: August 9, 2023

To: **Clerk's Office**

CC: **Brenda Stumbo, Supervisor**

From: Michael Saranen, Operation Manager

Subject: Department Report (activities in July 2023)

Activities:

Ford Lake Dam (Hydro Station)

General Operation Summary:
The Hydro Station continues to operate safely and continues to get routine safety inspections and preventive maintenance. Operators had 4 after-hour call-ins for the month.

Average precipitation for the month of is around 3.51", this year it was about 5.37".

Regulatory Status:

For 2023-

- DSSMR, **Complete & Filed**
- Owners Dam Safety Program Review – In progress
- EAP annual update and test-
- EAP First Responder Training- **Complete**
- WQ Report – **Started, collecting data**
- Nuisance Plant Plan Report – **Started**
- Wildlife Plan Report –
- Historical Activity Report –
- Gate Certification –
- Security Review – Planning
- FERC Security Inspection/Compliance-
- FERC Annual Dam Safety Inspection **– Complete**
- Annual DEQ Lake Operation Monitoring Report- **Out for Review**
- Spillway Assessment Action Plan- **Filed, addressing comments by FERC, Ongoing**
- Public Safety Plan Update- **Started**
- Fish & Sediment Analysis - **Started**

Future Items:

- Shoreline Restoration, Ford Lake Park
- PMF Study for watershed
- Part 12 Inspection - 2025
- Shoreline Erosion Survey – 2025
- Protective Relay testing – 2024
- Emergency Gen Testing – 2025
- Downstream Concrete repairs – 2025
- Powerhouse windows and concrete repairs – 2025
- EAP Table Top Exercise – 2024
- EAP Rewrite - 2025

Projects:

Concrete Repairs- **Delayed**, approved by the Board to go out to bid. Construction was planned for summer 2023, however the cost came in doubled and the project will be rebid in coming months.

Sluice Gate Stress Analysis- Delayed, the FERC has requested a detailed study of the spillway gates. This is a common industry request from FERC as they continuously look at safety involving dams. We are currently working with engineering to develop a procedure to complete this task. This task is now planned for 2024.

Powerhouse Service Power Upgrades- the high voltage cable from the house transformer to the transfer switch needs to be replaced due to inadequate sizing for the load. This is planned for 2023 during station down time.

Turbine Inspections and Maintenance- Conduct cleaning, inspection and maintenance on turbine equipment and associated spaces. #2 was inspected and found to be satisfactory. #1 is planned in the 4th quarter of the year.

Tailrace Safety Buoys- Install new buoys across the spillway. With the spillway gates being automated, additional safety precautions to prevent boats from getting too close when the gates open automatically.

Operation Summary

2023	**July**	**YTD**	**5 Year Ave.**
Precipitation total (inches)[1]	5.37	22.51	39.1
Days Online	30.8	210.4	359.6
Generation MWH (estimated)	455.296	5,692.551	10,728.8
Generation MWH **lost** (estimated)*	7.781	188.699	582.9
After Hour Call In			
Water levels	4	12	39
Mechanical/Electrical	0	1	4
Other	0	1	2
Totals	4	14	45

Recent History	**2018**	**2019**	**2020**	**2021**	**2022**
Precipitation total (inches)	42.2	45.4	41.4	40.0	26.37
Days Online	364.2	350.6	359.7	360.0	363.5
Generation MWH (estimated)	10,635.0	12,576.7	10,722.7	10,524.5	9,185.151
Generation MWH **lost** (estimated)*	552.9	1,005.8	570.2	423.2	362.5
After Hour Call In					
Water levels	26	30	69	3	36
Mechanical/Electrical	5	3	4	9	0
Other	3	0	2	0	4
Totals	34	33	75	42	40

[1] Preliminary totals from NOAA for Detroit

*losses related to scheduled & unscheduled maintenance and water quality discharges.

Gate Spilling Summary:

Releasing water from the sluice gates is primary done to maintain lake level when flow exceeds the powerhouse. At certain times, we can use the gates to help keep the lake mixed to maintain oxygen levels (effectiveness depends on a number of factors) at the bottom of the lake.

The water quality monitoring begins on June 1st and will end on September 30th; operators monitor the water quality conditions and take readings as outline in the WQ Plan. The dam releases water from the bottom gates to maintain run of river and/or help with water quality in Ford Lake. The Federal License requires us to pass water with a minimum of 5mg/l of dissolved oxygen all the time. Therefore, spilling from the bottom gates in the summer to improve the lake is not always possible.

Sluice Gate Usage Summary:

Current Year **2023**	Current Year Days Spilled	Current Year Lost KWh*	Current Year Lost KW$*	Prior Yr. Lost KW$*
January	0	0	0	0
February	1.2	0	0	0
March	13.8	0	0	0
April	13.4	0	0	0
May	4.6	25,759	$ 1,597	$ 58
June	29.2	133,476	$ 8,241	$ 7495
July	6.7	6,057	$373	$ 2,054
August				$ 6,303
September				$ 279
October				0
November				0
December				0
Totals	68.9	165,292	$ 10,211	$ 21,690

*Estimated losses from diverting water away from generators for the **purpose of improving WQ**.

Sargent Charles Dam

This dam continues to get routine safety inspections and appropriate maintenance.

In 2023, this dam will get periodic safety inspection by the state, no date has been set.

Township Supervisor
Brenda L. Stumbo
Township Clerk
Heather Jarrell Roe
Township Treasurer
Stan Eldridge

YPSILANTI TOWNSHIP
— WHERE YOUR FUTURE GROWS —

Trustees
John Newman II
Gloria Peterson
Debbie Swanson
Ryan Hunter

OFFICE OF COMMUNITY STANDARDS

Building Safety • Planning & Zoning • Ordinance Enforcement

To: Board of Trustees

From: Belinda Kingsley, Community Compliance Director
Dave Bellers, Chief Building Official
Jason Iacoangeli, Planning Director
Tom Greenwood, Executive Coordinator

Re: OFFICE OF COMMUNITY STANDARDS ACTIVITY REPORT – July 2023

Date: August 7, 2023

Attached are reports for the following areas of activity within the Office of Community Standards for the period of July 1, 2023, thru July 31, 2023.

1. ACTIVE LITIGATION CASES
2. NEW CODE ENFORCEMENT CASES
3. NEW RENTAL HOUSING CERTIFICATIONS
4. NEW VACANT STRUCTURE APPLICATIONS
5. BUILDING DEPARTMENT PERMITS ISSUED
6. BUILDING CERTIFICATES OF OCCUPANCY ISSUED
7. PLANNING & DEVELOPMENT PROJECTS

COURT CASE REVIEW

0	Dir	Address	Defendant	Nature of Case	Status	Updated Notes	Date Last Reviewed	Next Court Date	Case No.:
1005		Emerick	GV, LLC (Robert Hull) Gault Village Shopping Center	Public Nuisance	AUTHORIZED AND FILED	Demo approved by Twp Board and Court, and underway.	8/2/2023		16-437-CZ
2355		Wiard	D&G Auto Salvage & Randy Clark	Public Nuisance	AUTHORIZED AND FILED	Taxes to be paid prior to moving forward with approval and dismissal. Order to be entered - need site plan and licenses.	8/2/2023		17-96-CZ
924-940		Minion	Circular Investments LLC (Issa)	Zoning/Woodland Protection/Soil Erosion	AUTHORIZED AND FILED	Site Plan has been approved - preliminary. Waiting for revised plans. Attorney refused meeting regarding noise. Site plan on hold.	8/2/2023	9/22/23 @ 1:30	17-809-CZ
1405		Ecorse	Elks Club	Public Nuisance	AUTHORIZED AND FILED	Several violations of the Court Order have occurred. Judge Connors ordered shut down.	8/2/2023	9/21/23 Status Conf	18-1259-CZ
1503		E. Michigan	Malek& Jenias Mohammed-KH Hamami	Public Nuisance	AUTHORIZED AND FILED	Continuously overparked on site. Legal meeting 4/25/23. Site inspection 5/22/23. Proposed Order sent to defense attorney.	8/2/2023	8/24/23 @ 3:30 Status Conf	19-1123-CZ
1474		Ecorse	Ypsi Motown Properties - Township Plaza	Public Nuisance	AUTHORIZED AND FILED	Front parking lot paved, alley will be in 2023. Façade and other work needs to be completed. Vacant inspection by court order 8/3/23. Woodlawn bldg use?	8/2/2023	9/21/23 @ 3:30	
399		Elder	Dabney	Public Nuisance	AUTHORIZED AND FILED	Lien placed against against the property ($19,000).	8/2/2023		

COURT CASE REVIEW

0	Dir	Address	Defendant	Nature of Case	Status	Updated Notes	Date Last Reviewed	Next Court Date	Case No.:
281		Ohio	Kinzerb Homes	Public Nuisance	AUTHORIZED AND FILED ESTATE	Probate closed. Property sold. Vacant or rental? Send offer to inspect/check current status.	8/2/2023		
1448		Nash	Ali Mohamed Usman	Public Nuisance	AUTHORIZED AND FILED ESTATE	Foreclosed with a new owner. Probate closed. Deed recorded 8/29/22. Send offer to inspect/check current status	8/2/2023		
2835		Coolidge Ave	Jason Bombrisk	Junkyard Licensing	AUTHORIZED AND FILED	Junkyard inspection request denied. Deliquent taxes. Inspected 4/23 by EGLE. Litigation filed - Judge Connors. Meeting on-site 8/15 @ 11:00	8/2/2023	8/24/23 @ 1:30	
8950/ 9070		Charlotte Ct	Oaks of Ypsilanti, LLC and Oaks of Golden Pond, LLC	Blight	AUTHORIZED AND FILED	TG did exterior inspection - sign, sidewalks and trash. Multi-family rental inspections in progress. List of violations sent to Denny.	8/2/2023		
1106	E	Michigan Avenue	Tri-County Cremations / Burrell Vault / Oneil Swanson	Public Nuisance	AUTHORIZED AND FILED	Plans submitted - under review. Transfer to Judge Connors. LARA dismissed. Exterior violations sent to attorney - TG send NOV.	8/2/2023	8/17/23 @ 1:30	
1221		Desoto	Swain Holdings	Public Nuisance	AUTHORIZED AND FILED	Work is being done to rehab the house. Swain Holdings LLC is new owner. TG check status of garage repairs.	8/2/2023		
6050	S	Ivanhoe	Timothy Yerebeck	Public Nuisance	AUTHORIZED AND FILED	Vacant house with blight and mold damage. Property sold. Bldg Dept to contact new owner, Timothy Yerebeck, regarding addition issues. Bldg walk-thru 3/29/23.	8/2/2023		

COURT CASE REVIEW

0	Dir	Address	Defendant	Nature of Case	Status	Updated Notes	Date Last Reviewed	Next Court Date	Case No.:
6630		Rawsonville	Motown Holdings	Public Nuisance	FILED AND SERVED	Illegal truck parking operation. Plans submitted and under review.	8/2/2023	9/21/23 @ 3:30	
386	S	Ford Blvd	Wolverine Auto Repair	Public Nuisance	PREVIOUS ORDER ENTERED	Unpermitted expansion of legal non-conforming business. Added towing and storage. Contempt hearing held 6/23/23.	8/2/2023	8/11/23 - final argument due	
8		June St	Hedger Breed	Public Nuisance	AUTHORIZED AND FILED	Tenant is overparking the site, second story condemned by Bldg Dept. Meeting on 1/31/23 with attorneys. FM and Bldg inspection on 6/13/23.	8/2/2023	8/23/23 @ 9:00 a.m.	
5970		Bridge	Round Haus	Zoning Violation	AUTHORIZED	Parking lot in disrepair. Site plan approved to demo and re-build building, and pre-con held. Litigation not filed. Ready to start work late July.	8/2/2023		
521		Eugene	Go America LLC	Public Nuisance	FILED AND SERVED	Foreclosed/Condemned House - Default Order to abate nuisance. Sold. Outstanding invoices.	8/2/2023		
2041		Parkwood	Harvey Properties Rental Mgmt	Public Nuisance	AUTHORIZED AND FILED	Accessory structure and container on-site. Order to be entered removing container in 30 days and secure the building. Six months to remove building or submit a site plan.	8/2/2023		
1473		Ecorse Rd	Hani Auto LLC	Zoning Violation	AUTHORIZED AND FILED	Parking lot needs to be completed. Pre-con mtg held. Site inspection 4/17 with attorneys. Order - Public Nuisance to be entered to vacate.	8/2/2023	8/23/23 @ 1:30	

COURT CASE REVIEW

0	Dir	Address	Defendant	Nature of Case	Status	Updated Notes	Date Last Reviewed	Next Court Date	Case No.:
1255		W Michigan	Jeffrey Murillo - Auto One	Zoning Violation	AUTHORIZED AND FILED	Major automotive repair business opened without approval. Also U-Haul and flea market businesses in the building.	8/2/2023		
550		Oaklawn	Jerry Baker	Public Nuisance - Fire	AUTHORIZED AND FILED	Fire in August 2021 - No insurance - Blight - Bringing in dumpsters to clean yard week of 4/17.	8/2/2023		
544		Oaklawn	Jerry Baker	Public Nuisance	PREVIOUS ORDER ENTERED	Blight in yard. Contempt hearing scheduled. Cleaned up in May.	8/2/2023		
835		George	Katherine Cerda and Thersa Cerda	Public Nuisance	PREVIOUSLY AUTHORIZED AND FILED	Will not permit rental inspections. PO ordered to provide notice to tenants re: inspection needs to be done and provide proof to court by 7/13. Order to be entered requiring tenants to allow inspections. Post	8/2/2023		
1254		Ecorse	Pet City Pets	Public Nuisance	AUTHORIZED AND FILED	Blight and zoning violations. Send Orkin for treatment?	8/2/2023	**9/6/23 @ 9:00**	
3011	E	Michigan Avenue	Men Like Us	Public Nuisance	AUTHORIZED AND FILED	Zoning Use Violation	8/2/2023	**8/24/23 @ 1:30**	
1769 - 1781		Cadillac	Jacob Lebo	Public Nuisance	AUTHORIZED	House rented without certificate. Commericial building used for grow op and auto use.	8/2/2023		

New Code Enforcement Cases - July 2023

Enforcement	Category	Date Filed	Subdivision	Address Display String
EN23-1473	Vegetation	07/03/2023	HOLMES ROAD AREA	1150 E CLARK RD
EN23-1474	Property Maintenance	07/03/2023	SOUTH DISTRICT	9575 FALMOUTH DR
EN23-1476	Blight	07/03/2023	SOUTH DISTRICT	8068 CREEK BEND DR
EN23-1477	Blight - Fire	07/03/2023		533 VILLA DR
EN23-1478	Blight	07/03/2023	OAKLAWN/HAWTHORNE AREA	1241 DAVIS ST
EN23-1479	Vegetation	07/03/2023	OAKLAWN/HAWTHORNE AREA	1300 PARKWOOD AVE
EN23-1480	Blight	07/03/2023	LAKEVIEW AREA	2095 IDE AVE
EN23-1481	Property Maintenance - Motor Vehicle	07/03/2023	OAKLAWN/HAWTHORNE AREA	476 WOODLAWN AVE
EN23-1482	Blight	07/03/2023	THURSTON AREA	223 OREGON ST
EN23-1483	Blight	07/03/2023	WEST WILLOW	1034 NASH AVE
EN23-1484	Blight	07/03/2023	LAKEVIEW AREA	2170 WOODALE AVE
EN23-1485	Blight	07/03/2023	OAKLAWN/HAWTHORNE AREA	1255 DUNCAN AVE
EN23-1486	Vegetation	07/03/2023	SOUTH DISTRICT	7807 BERWICK DR
EN23-1487	MULTI	07/03/2023	SOUTH DISTRICT	7380 HOMESTEAD RD
EN23-1488	Zoning	07/05/2023	WEST WILLOW	1770 TYLER RD
EN23-1489	Zoning	07/05/2023	OAKLAWN/HAWTHORNE AREA	842 HAWTHORNE AVE
EN23-1490	Vegetation	07/05/2023	SOUTH DISTRICT	5408 WHITTAKER RD
EN23-1491	Vegetation	07/05/2023		924 MINION ST
EN23-1492	Solid Waste	07/05/2023	GAULT VILLAGE AREA	1072 LEVONA ST
EN23-1493	Property Maintenance	07/05/2023	OAKLAWN/HAWTHORNE AREA	1155 PARKWOOD AVE
EN23-1494	Vegetation	07/05/2023	WEST WILLOW	1151 WOODGLEN AVE
EN23-1495	Solid Waste	07/05/2023	WEST WILLOW	1144 WOODGLEN AVE
EN23-1496	Property Maintenance	07/05/2023	WEST WILLOW	1156 WOODGLEN AVE
EN23-1497	Vegetation	07/05/2023	LAKEVIEW AREA	1961 GROVE RD
EN23-1498	Vegetation	07/05/2023	HOLMES ROAD AREA	1502 E CLARK RD
EN23-1499	Vegetation	07/05/2023	HOLMES ROAD AREA	1524 E CLARK RD
EN23-1500	Vegetation	07/05/2023	GAULT VILLAGE AREA	1011 COLEMAN ST
EN23-1501	Vegetation	07/05/2023	GAULT VILLAGE AREA	1012 GEORGINA DR
EN23-1502	Vegetation	07/05/2023	GAULT VILLAGE AREA	1013 GEORGINA DR
EN23-1503	Vegetation	07/05/2023	GAULT VILLAGE AREA	1010 BORGSTROM AVE
EN23-1504	Vegetation	07/05/2023	SUGARBROOK AREA	1591 MOLLIE ST

EN23-1505	Vegetation	07/05/2023	SUGARBROOK AREA	1607 MOLLIE ST
EN23-1506	Blight	07/05/2023	OAKLAWN/HAWTHORNE AREA	630 KANSAS AVE
EN23-1507	Solid Waste	07/05/2023	WEST WILLOW	1090 DESOTO AVE
EN23-1508	Vegetation	07/05/2023	OAKLAWN/HAWTHORNE AREA	551 GREENLAWN ST
EN23-1509	Vegetation	07/05/2023	SOUTH DISTRICT	7427 WILLOW CREEK DR
EN23-1510	Zoning	07/05/2023	OAKLAWN/HAWTHORNE AREA	532 GREENLAWN
EN23-1511	Solid Waste	07/05/2023	WEST WILLOW	1021 DESOTO AVE
EN23-1512	Solid Waste	07/05/2023	SOUTH DISTRICT	7403 WILLOW CREEK DR
EN23-1513	Vegetation	07/05/2023	OAKLAWN/HAWTHORNE AREA	570 GREENLAWN ST
EN23-1514	Blight	07/05/2023	SOUTH DISTRICT	7319 WILLOW CREEK DR
EN23-1515	Vegetation	07/05/2023	WEST WILLOW	908 DESOTO AVE
EN23-1516	MULTI	07/05/2023	WEST WILLOW	571 NASH AVE
EN23-1517	Blight	07/05/2023	SOUTH DISTRICT	7424 WILLOW CREEK DR
EN23-1518	Vegetation	07/05/2023	WEST WILLOW	900 DESOTO AVE
EN23-1519	Solid Waste	07/05/2023	WEST WILLOW	1070 DESOTO AVE
EN23-1520	Vegetation	07/05/2023	HOLMES ROAD AREA	1144 E CLARK RD
EN23-1521	Vegetation	07/05/2023	HOLMES ROAD AREA	1180 E CLARK RD
EN23-1522	Solid Waste	07/05/2023	WEST WILLOW	1192 WOODGLEN AVE
EN23-1523	Vegetation	07/05/2023	WEST WILLOW	1338 NASH AVE
EN23-1524	Blight	07/05/2023	WEST WILLOW	1346 NASH AVE
EN23-1525	Vegetation	07/05/2023	WEST WILLOW	1011 NASH AVE
EN23-1526	Blight	07/05/2023	WEST WILLOW	1022 NASH AVE
EN23-1527	Solid Waste	07/05/2023	WEST WILLOW	1192 WOODGLEN AVE
EN23-1528	Vegetation	07/05/2023	WEST WILLOW	1074 NASH AVE
EN23-1529	Solid Waste	07/05/2023	WEST WILLOW	1792 TYLER RD
EN23-1530	Solid Waste	07/05/2023	WEST WILLOW	543 ONANDAGA AVE
EN23-1531	MULTI	07/06/2023	WEST WILLOW	1252 WOODGLEN AVE
EN23-1532	Solid Waste	07/06/2023	WEST WILLOW	1285 WOODGLEN AVE
EN23-1533	Zoning	07/06/2023	OAKLAWN/HAWTHORNE AREA	513 OAKLAWN AVE
EN23-1536	Solid Waste	07/06/2023	BUD/BLOSSOM AREA	1341 BLOSSOM AVE
EN23-1537	Rental - Unregistered	07/07/2023	BUD/BLOSSOM AREA	1341 BLOSSOM AVE
EN23-1538	Vegetation	07/06/2023	SUGARBROOK AREA	1465 ANDREA ST
EN23-1539	Blight	07/06/2023	OAKLAWN/HAWTHORNE AREA	647 GLENWOOD AVE
EN23-1540	Vegetation	07/06/2023	GAULT VILLAGE AREA	1049 GAULT DR

EN23-1541	Property Maintenance	07/06/2023	APPLERIDGE AREA	1274 RIDGE RD
EN23-1543	Vegetation	07/06/2023	SOUTH DISTRICT	7334 HOGAN DR
EN23-1544	Vegetation	07/06/2023	SOUTH DISTRICT	7295 WILLOW CREEK DR
EN23-1545	Blight	07/06/2023	LAY GARDENS AREA	1395 E MICHIGAN AVE
EN23-1546	Blight	07/06/2023	LAY GARDENS AREA	1379 E MICHIGAN AVE
EN23-1547	Vegetation	07/06/2023	WEST WILLOW	1950 MARY CATHERINE ST
EN23-1548	Blight	07/06/2023	LAY GARDENS AREA	564 E GRAND BLVD
EN23-1549	Blight	07/06/2023	LAY GARDENS AREA	563 E GRAND BLVD
EN23-1550	Vegetation	07/06/2023	LAY GARDENS AREA	563 E GRAND BLVD
EN23-1551	Vegetation	07/06/2023	WEST WILLOW	1961 MARY CATHERINE ST
EN23-1552	Property Maintenance - Motor Vehicle	07/06/2023	HOLMES ROAD AREA	938 N RIVER ST
EN23-1553	Vegetation	07/06/2023	WEST WILLOW	1972 MARY CATHERINE ST
EN23-1554	Blight	07/06/2023	OAKLAWN/HAWTHORNE AREA	424 WOODLAWN AVE
EN23-1555	Vegetation	07/06/2023	OAKLAWN/HAWTHORNE AREA	989 HAWTHORNE AVE
EN23-1556	Vacant Property/Building Investigation	07/06/2023	HOLMES ROAD AREA	922 N RIVER ST
EN23-1557	Vegetation	07/06/2023	WEST WILLOW	1965 MARY CATHERINE ST
EN23-1558	Blight	07/06/2023	WEST WILLOW	1985 MARY CATHERINE ST
EN23-1559	Vegetation	07/06/2023	WEST WILLOW	1341 DESOTO AVE
EN23-1560	Vegetation	07/06/2023	WEST WILLOW	1305 DESOTO AVE
EN23-1561	Vegetation	07/06/2023	WEST WILLOW	1355 DESOTO AVE
EN23-1562	Vegetation	07/06/2023	WEST WILLOW	1478 DESOTO AVE
EN23-1563	MULTI	07/06/2023	WEST WILLOW	1364 DESOTO AVE
EN23-1564	Vegetation	07/06/2023	WEST WILLOW	1990 CHEVROLET AVE
EN23-1565	Vegetation	07/06/2023	WEST WILLOW	1376 DESOTO AVE
EN23-1566	Blight	07/07/2023	GAULT VILLAGE AREA	1073 GEORGINA DR
EN23-1567	Vegetation	07/07/2023	SUGARBROOK AREA	1815 HEATHERRIDGE ST
EN23-1568	Vegetation	07/07/2023	SOUTH DISTRICT	7310 HOGAN DR
EN23-1569	Blight	07/07/2023	OAKLAWN/HAWTHORNE AREA	1030 HAWTHORNE AVE
EN23-1570	Blight	07/07/2023	OAKLAWN/HAWTHORNE AREA	969 HAWTHORNE AVE
EN23-1571	Vegetation	07/07/2023	SUGARBROOK AREA	1431 ANDREA ST
EN23-1572	MULTI	07/07/2023	SUGARBROOK AREA	1423 ANDREA ST
EN23-1573	Property Maintenance	07/07/2023	OAKLAWN/HAWTHORNE AREA	957 HAWTHORNE AVE
EN23-1574	Solid Waste	07/07/2023	SUGARBROOK AREA	1621 FOLEY AVE
EN23-1575	Vegetation	07/07/2023	OAKLAWN/HAWTHORNE AREA	524 OAKLAWN AVE

EN23-1576	Vegetation	07/07/2023	SUGARBROOK AREA	1624 FOLEY AVE
EN23-1577	Vegetation	07/07/2023	SUGARBROOK AREA	1633 FOLEY AVE
EN23-1578	Vegetation	07/07/2023	SUGARBROOK AREA	1704 FOLEY AVE
EN23-1579	Vegetation	07/07/2023	OAKLAWN/HAWTHORNE AREA	874 AUBURNDALE AVE
EN23-1580	Vegetation	07/07/2023	SUGARBROOK AREA	1722 FOLEY AVE
EN23-1581	Vegetation	07/07/2023	OAKLAWN/HAWTHORNE AREA	920 AUBURNDALE AVE
EN23-1582	Vegetation	07/07/2023	OAKLAWN/HAWTHORNE AREA	935 AUBURNDALE AVE
EN23-1583	Vegetation	07/07/2023	SUGARBROOK AREA	1428 FOLEY AVE
EN23-1584	Vegetation	07/07/2023	SUGARBROOK AREA	1361 ANDREA ST
EN23-1585	Vegetation	07/07/2023	SUGARBROOK AREA	1543 FOLEY AVE
EN23-1586	Vegetation	07/07/2023	OAKLAWN/HAWTHORNE AREA	516 OAKLAWN AVE
EN23-1587	Solid Waste	07/07/2023	OAKLAWN/HAWTHORNE AREA	517 OAKLAWN AVE
EN23-1588	Blight	07/10/2023	WEST WILLOW	568 ONANDAGA AVE
EN23-1589	Solid Waste	07/10/2023	WEST WILLOW	574 ONANDAGA AVE
EN23-1590	Property Maintenance	07/10/2023	WEST WILLOW	521 EUGENE ST
EN23-1591	Solid Waste	07/10/2023	SOUTH DISTRICT	5212 APPLEWOOD DR
EN23-1592	Zoning	07/10/2023		1198 E CROSS ST 3
EN23-1593	Property Maintenance - Motor Vehicle	07/10/2023	SOUTH DISTRICT	6478 ENCHANTED DR
EN23-1594	Vegetation	07/10/2023	HOLMES ROAD AREA	1466 N PROSPECT RD
EN23-1595	Vegetation	07/10/2023	HOLMES ROAD AREA	1470 N PROSPECT RD
EN23-1596	Vegetation	07/10/2023	WEST WILLOW	1472 NASH AVE
EN23-1597	Vegetation	07/10/2023	WEST WILLOW	885 DESOTO AVE
EN23-1598	Blight	07/10/2023	SOUTH DISTRICT	7885 WINTERFIELD DR
EN23-1599	Zoning	07/10/2023	HOLMES ROAD AREA	1220 PAGEANT AVE
EN23-1600	Blight	07/10/2023	HOLMES ROAD AREA	944 N RIVER ST
EN23-1601	Vacant Property/Building Investigation	07/10/2023	HOLMES ROAD AREA	944 N RIVER ST
EN23-1602	Blight	07/10/2023	HOLMES ROAD AREA	940 N RIVER ST
EN23-1604	Vacant Property/Building Investigation	07/10/2023	LAY GARDENS AREA	743 BAGLEY AVE
EN23-1605	Vegetation	07/10/2023	WEST WILLOW	1306 NASH AVE
EN23-1606	Vegetation	07/10/2023	WEST WILLOW	1354 NASH AVE
EN23-1607	Vegetation	07/10/2023	HOLMES ROAD AREA	1075 SWEET RD
EN23-1608	Rental - Unregistered	07/10/2023	HOLMES ROAD AREA	1075 SWEET RD
EN23-1610	Rental - Unregistered	07/10/2023	SOUTH DISTRICT	8813 TAMARACK LN
EN23-1611	Blight	07/10/2023	SOUTH DISTRICT	8813 TAMARACK LN

EN23-1612	Zoning	07/10/2023	SOUTH DISTRICT	2010 WHITTAKER (KROGER) I
EN23-1613	Solid Waste	07/10/2023	GAULT VILLAGE AREA	1248 S HARRIS RD
EN23-1614	Blight	07/10/2023	WEST WILLOW	709 FOX AVE
EN23-1615	Vegetation	07/10/2023	GAULT VILLAGE AREA	1184 S HARRIS RD
EN23-1616	Vegetation	07/10/2023	LAKEVIEW AREA	2027 IDE AVE
EN23-1617	MULTI	07/10/2023	OAKLAWN/HAWTHORNE AREA	553 KANSAS AVE
EN23-1618	Vegetation	07/10/2023		1473 ECORSE RD
EN23-1619	Vegetation	07/10/2023	WEST WILLOW	730 FOX AVE
EN23-1620	Blight	07/10/2023	WEST WILLOW	667 ONANDAGA AVE
EN23-1621	Vegetation	07/10/2023	WEST WILLOW	696 OSWEGO AVE
EN23-1622	Vegetation	07/10/2023	WEST WILLOW	709 FOX AVE
EN23-1623	Blight	07/10/2023	WEST WILLOW	676 OSWEGO AVE
EN23-1624	Blight	07/10/2023	THURSTON AREA	363 KANSAS AVE
EN23-1625	Blight	07/10/2023	THURSTON AREA	327 KANSAS AVE
EN23-1626	Vegetation	07/10/2023	WEST WILLOW	719 OSWEGO AVE
EN23-1627	Vegetation	07/10/2023	WEST WILLOW	680 DESOTO AVE
EN23-1628	Vegetation	07/10/2023		1133 E MICHIGAN AVE
EN23-1629	Vegetation	07/10/2023	LAKEVIEW AREA	2217 LAKEVIEW AVE
EN23-1630	Solid Waste	07/10/2023	HOLMES ROAD AREA	1126 E CLARK RD
EN23-1631	Vegetation	07/10/2023	WEST WILLOW	730 CALDER AVE
EN23-1632	Vegetation	07/10/2023	HOLMES ROAD AREA	1075 SWEET RD
EN23-1633	Vegetation	07/10/2023	LAKEVIEW AREA	2213 LAKEVIEW AVE
EN23-1634	Vegetation	07/10/2023	HOLMES ROAD AREA	1248 E CLARK RD
EN23-1635	Blight	07/10/2023	GAULT VILLAGE AREA	1186 GAULT DR
EN23-1636	Rental - Unregistered	07/11/2023	SUGARBROOK AREA	1315 HARRY ST
EN23-1637	Vegetation	07/11/2023	WEST WILLOW	542 HUDSON ST
EN23-1638	Vegetation	07/11/2023	HOLMES ROAD AREA	1186 N PROSPECT RD
EN23-1639	Vegetation	07/11/2023	HOLMES ROAD AREA	1175 N PROSPECT RD
EN23-1640	Solid Waste	07/11/2023	OAKLAWN/HAWTHORNE AREA	599 PINEWOOD ST
EN23-1641	Zoning	07/11/2023	THURSTON AREA	382 KANSAS AVE
EN23-1642	Vegetation	07/11/2023	OAKLAWN/HAWTHORNE AREA	589 KENNEDY AVE
EN23-1643	Blight	07/11/2023	WEST WILLOW	643 NASH AVE
EN23-1644	Blight	07/11/2023	WEST WILLOW	785 DESOTO AVE
EN23-1645	Blight	07/11/2023	WEST WILLOW	789 NASH AVE

EN23-1646	Vegetation	07/11/2023	SOUTH DISTRICT	5968 BIG PINE DR
EN23-1647	Blight	07/11/2023	SOUTH DISTRICT	6052 TUTTLE HILL RD
EN23-1648	Vegetation	07/11/2023	SOUTH DISTRICT	6007 S MIAMI ST
EN23-1649	Zoning	07/11/2023	OAKLAWN/HAWTHORNE AREA	439 HAYES ST
EN23-1650	Zoning	07/11/2023	OAKLAWN/HAWTHORNE AREA	918 HAWTHORNE AVE
EN23-1651	Blight	07/11/2023	WEST WILLOW	2364 BROOKTREE CT
EN23-1652	Blight	07/11/2023	OAKLAWN/HAWTHORNE AREA	1167 DAVIS ST
EN23-1653	Solid Waste	07/11/2023	LAKEVIEW AREA	2160 CRITTENDON AVE
EN23-1654	MULTI	07/11/2023	OAKLAWN/HAWTHORNE AREA	1205 DAVIS ST
EN23-1655	MULTI	07/11/2023	LAKEVIEW AREA	2056 GEORGE AVE
EN23-1656	Vegetation	07/11/2023	SUGARBROOK AREA	1427 GATTEGNO ST
EN23-1657	Blight	07/11/2023	WEST WILLOW	550 ONANDAGA AVE
EN23-1658	Blight	07/11/2023	WEST WILLOW	1212 NASH AVE
EN23-1659	Solid Waste	07/11/2023	PINEVIEW AREA	5445 PINEVIEW DR
EN23-1660	Vegetation	07/11/2023	CREEKSIDE SOUTH AREA	8899 MEADOW LN
EN23-1661	Solid Waste	07/11/2023	HOLMES ROAD AREA	1075 SWEET RD
EN23-1662	MULTI	07/11/2023	HOLMES ROAD AREA	1220 PAGEANT AVE
EN23-1663	Blight	07/11/2023	OAKLAWN/HAWTHORNE AREA	561 WOODLAWN AVE
EN23-1664	Blight	07/11/2023	THURSTON AREA	1624 PARKWOOD AVE
EN23-1665	Vegetation	07/11/2023	THURSTON AREA	278 OREGON ST
EN23-1666	Litigation	07/12/2023	OAKLAWN/HAWTHORNE AREA	580 KANSAS AVE
EN23-1667	Solid Waste	07/12/2023	OAKLAWN/HAWTHORNE AREA	942 MAPLEWOOD AVE
EN23-1668	Solid Waste	07/12/2023	SOUTH DISTRICT	7304 SEA MIST DR
EN23-1669	Vegetation	07/12/2023	LAKEVIEW AREA	2194 MCGREGOR RD
EN23-1670	Zoning	07/12/2023	THURSTON AREA	149 S HARRIS RD
EN23-1671	Blight	07/12/2023	SUGARBROOK AREA	1515 GROVE RD
EN23-1672	Vegetation	07/12/2023	LAY GARDENS AREA	634 BAGLEY AVE
EN23-1673	Vegetation	07/12/2023	LAY GARDENS AREA	649 N IVANHOE AVE
EN23-1674	Blight	07/12/2023	SUGARBROOK AREA	1353 ANDREA ST
EN23-1675	Blight	07/12/2023	OAKLAWN/HAWTHORNE AREA	576 MONTREAL AVE
EN23-1676	Vegetation	07/12/2023	WESTLAWN AREA	3127 SOUTHLAWN ST
EN23-1677	Solid Waste	07/12/2023	SOUTH DISTRICT	7171 HOGAN DR
EN23-1678	Blight	07/12/2023	WESTLAWN AREA	535 RICE AVE
EN23-1679	Vegetation	07/12/2023	LAY GARDENS AREA	551 N MIAMI AVE

EN23-1680	Blight	07/12/2023	LAY GARDENS AREA	1060 E FOREST AVE
EN23-1681	Parking	07/12/2023	CREEKSIDE SOUTH AREA	7306 MERIDIAN DR
EN23-1682	Vegetation	07/12/2023	SOUTH DISTRICT	9263 PARKLAND DR
EN23-1683	Vegetation	07/12/2023	SOUTH DISTRICT	9203 PARKLAND DR
EN23-1684	Blight	07/12/2023	LAKEVIEW AREA	1841 EMERSON AVE
EN23-1685	Blight	07/12/2023	LAKEVIEW AREA	2068 MOELLER AVE
EN23-1686	Solid Waste	07/12/2023	LAKEVIEW AREA	1896 EMERSON AVE
EN23-1687	Blight	07/12/2023	LAKEVIEW AREA	1979 S PASADENA ST
EN23-1688	Vegetation	07/12/2023	LAKEVIEW AREA	2168 MOELLER AVE
EN23-1689	Blight	07/12/2023	LAKEVIEW AREA	2054 MCGREGOR RD
EN23-1690	Blight	07/12/2023	LAKEVIEW AREA	2032 MOELLER AVE
EN23-1691	Property Maintenance	07/12/2023	WEST WILLOW	1112 ZEPHYR ST
EN23-1692	Blight	07/13/2023	HOLMES ROAD AREA	1221 REDLEAF LN
EN23-1693	Vegetation	07/13/2023	LAY GARDENS AREA	850 ALLEN RD
EN23-1694	Blight	07/13/2023	OAKLAWN/HAWTHORNE AREA	217 OAKLAWN AVE
EN23-1695	Solid Waste	07/13/2023	WEST WILLOW	670 EUGENE ST
EN23-1696	MULTI	07/13/2023	GAULT VILLAGE AREA	1220 BORGSTROM AVE
EN23-1697	Vegetation	07/13/2023	OAKLAWN/HAWTHORNE AREA	903 HAWTHORNE AVE
EN23-1698	Vegetation	07/13/2023	HEWITT ROAD AREA	2040 S CONGRESS ST
EN23-1699	Vegetation	07/13/2023	WEST WILLOW	2360 CEDARCLIFF AVE
EN23-1700	Vegetation	07/13/2023	WEST WILLOW	2348 CEDARCLIFF AVE
EN23-1701	Solid Waste	07/13/2023	THURSTON AREA	290 OHIO ST
EN23-1702	Blight	07/13/2023	OAKLAWN/HAWTHORNE AREA	650 PINEWOOD ST
EN23-1703	Vegetation	07/13/2023	OAKLAWN/HAWTHORNE AREA	580 KENNEDY AVE
EN23-1704	Vegetation	07/13/2023	SOUTH DISTRICT	5196 APPLEWOOD DR
EN23-1705	Blight	07/13/2023	THURSTON AREA	357 OHIO ST
EN23-1706	Vegetation	07/13/2023	THURSTON AREA	130 OHIO ST
EN23-1707	Solid Waste	07/13/2023	THURSTON AREA	42 OHIO ST
EN23-1708	Solid Waste	07/13/2023	OAKLAWN/HAWTHORNE AREA	611 PINEWOOD ST
EN23-1709	Solid Waste	07/13/2023	THURSTON AREA	105 KANSAS AVE
EN23-1710	Blight	07/13/2023	THURSTON AREA	115 KANSAS AVE
EN23-1711	Assist Other Agency	07/13/2023	THURSTON AREA	299 DAKOTA AVE
EN23-1712	Assist Other Agency	07/13/2023	THURSTON AREA	290 OHIO ST
EN23-1713	Vegetation	07/13/2023	THURSTON AREA	229 DEVONSHIRE RD

EN23-1714	Vegetation	07/13/2023	THURSTON AREA	98 DEVONSHIRE RD
EN23-1715		07/13/2023	THURSTON AREA	117 DEVONSHIRE RD
EN23-1716	Vegetation	07/13/2023	THURSTON AREA	20 DEVONSHIRE RD
EN23-1717	Blight	07/13/2023	THURSTON AREA	14 DEVONSHIRE RD
EN23-1718	Vegetation	07/13/2023	THURSTON AREA	275 DEVONSHIRE RD
EN23-1719	Vegetation	07/13/2023	THURSTON AREA	96 DEVONSHIRE RD
EN23-1720	Vegetation	07/13/2023	THURSTON AREA	392 DAKOTA AVE
EN23-1721	MULTI	07/13/2023	WEST WILLOW	1976 MARY CATHERINE ST
EN23-1722	Blight	07/13/2023	WEST WILLOW	2377 BROOKTREE CT
EN23-1723	Zoning	07/13/2023	THURSTON AREA	24 OREGON ST
EN23-1724	Property Maintenance	07/13/2023	THURSTON AREA	30 OHIO ST
EN23-1725	Blight	07/13/2023	LAKEVIEW AREA	1839 CRITTENDON AVE
EN23-1726	Blight	07/13/2023	THURSTON AREA	228 OREGON ST
EN23-1727	Zoning	07/13/2023	OAKLAWN/HAWTHORNE AREA	842 HAWTHORNE AVE
EN23-1728	Blight	07/13/2023	LAKEVIEW AREA	1711 SMITH ST
EN23-1729	Blight	07/13/2023	THURSTON AREA	333 OREGON ST
EN23-1730	Vegetation	07/13/2023	LAKEVIEW AREA	1802 PATRICK ST
EN23-1731	Vegetation	07/13/2023	WEST WILLOW	2359 SUNNYGLEN AVE
EN23-1732	Blight	07/13/2023	WEST WILLOW	993 DESOTO AVE
EN23-1733	Vegetation	07/13/2023	THURSTON AREA	298 OREGON ST
EN23-1734	Blight	07/13/2023	THURSTON AREA	263 OREGON ST
EN23-1735	Vegetation	07/14/2023	SOUTH DISTRICT	6934 POPLAR DR
EN23-1736	Property Maintenance - Motor Vehicle	07/14/2023	SOUTH DISTRICT	5382 TEXTILE RD
EN23-1737	Vegetation	07/14/2023	BUD/BLOSSOM AREA	1313 BLOSSOM AVE
EN23-1738	Vegetation	07/14/2023	BUD/BLOSSOM AREA	1404 BLOSSOM AVE
EN23-1739	Blight	07/14/2023	GAULT VILLAGE AREA	1334 SHIRLEY DR
EN23-1740	Vegetation	07/14/2023	WEST WILLOW	913 NASH AVE
EN23-1741	Blight	07/14/2023	WEST WILLOW	1455 DESOTO AVE
EN23-1742	Blight	07/14/2023	LAKEVIEW AREA	1753 EMERSON AVE
EN23-1743	Solid Waste	07/14/2023	WEST WILLOW	762 OSWEGO AVE
EN23-1744	Vegetation	07/14/2023	WEST WILLOW	819 EUGENE ST
EN23-1745	Vegetation	07/14/2023	WEST WILLOW	2312 CEDARCLIFF AVE
EN23-1746	Vegetation	07/14/2023	WEST WILLOW	847 EUGENE ST
EN23-1747	Blight	07/14/2023	WEST WILLOW	835 EUGENE ST

EN23-1748	Vegetation	07/14/2023	LAY GARDENS AREA	603 N IVANHOE AVE
EN23-1749	Solid Waste	07/14/2023	LAY GARDENS AREA	525 HOLLIS AVE
EN23-1750	Solid Waste	07/14/2023	LAY GARDENS AREA	529 BAGLEY AVE
EN23-1751	Vegetation	07/14/2023	LAY GARDENS AREA	600 N IVANHOE AVE
EN23-1752	Solid Waste	07/14/2023	LAY GARDENS AREA	571 HOLLIS AVE
EN23-1753	Blight	07/14/2023	THURSTON AREA	158 OHIO ST
EN23-1754	Vegetation	07/14/2023	SOUTH DISTRICT	7294 WILLOW CREEK DR
EN23-1755	Blight	07/17/2023	WEST WILLOW	1075 NASH AVE
EN23-1756	Vegetation	07/17/2023	SOUTH DISTRICT	5608 JUSTIN CT
EN23-1757	Blight	07/17/2023	HOLMES ROAD AREA	1230 REDLEAF LN
EN23-1758	Blight	07/17/2023	HOLMES ROAD AREA	1240 REDLEAF LN
EN23-1759	Parking	07/17/2023	HOLMES ROAD AREA	931 RUE DEAUVILLE BLVD
EN23-1760	Vegetation	07/17/2023	SOUTH DISTRICT	5769 SUNSET TRL
EN23-1761	Vegetation	07/17/2023	SOUTH DISTRICT	6573 MEADOWLARK LN
EN23-1762	Rental - Unregistered	07/17/2023	APPLERIDGE AREA	2705 PEACHCREST ST
EN23-1763	Blight	07/17/2023		743 OSWEGO AVE
EN23-1764	Vegetation	07/17/2023	GAULT VILLAGE AREA	1110 RUTH AVE
EN23-1765	Property Maintenance - Motor Vehicle	07/17/2023	PINEVIEW AREA	5925 PINEVIEW DR
EN23-1766	Solid Waste	07/17/2023	SOUTH DISTRICT	7889 RAINTREE DR
EN23-1767	Vegetation	07/17/2023	WEST WILLOW	535 NASH AVE
EN23-1768	Vegetation	07/17/2023	WEST WILLOW	633 NASH AVE
EN23-1769	Vegetation	07/17/2023	WEST WILLOW	2351 SUNNYGLEN AVE
EN23-1770	MULTI	07/17/2023	WESTLAWN AREA	472 BERGEN AVE
EN23-1771	Blight	07/17/2023	LAY GARDENS AREA	511 N MIAMI AVE
EN23-1772	Vegetation	07/17/2023	LAKEVIEW AREA	2174 BRADLEY AVE
EN23-1773	Vegetation	07/17/2023	LAKEVIEW AREA	2160 BRADLEY AVE
EN23-1774	Solid Waste	07/17/2023	WEST WILLOW	1006 ZEPHYR ST
EN23-1775	Solid Waste	07/17/2023	SOUTH DISTRICT	8035 VALLEYVIEW DR
EN23-1776	BB HOOP	07/17/2023	SOUTH DISTRICT	5860 BIG PINE DR
EN23-1777	Vegetation	07/17/2023	SOUTH DISTRICT	5384 INDIAN TRL
EN23-1778	Vegetation	07/17/2023	SUGARBROOK AREA	1773 DOROTHY ST
EN23-1779	Vegetation	07/17/2023	SUGARBROOK AREA	1792 DOROTHY ST
EN23-1780	Vegetation	07/17/2023	SOUTH DISTRICT	9714 WHITE TAIL DR
EN23-1781	Solid Waste	07/17/2023	SOUTH DISTRICT	9751 WHITE TAIL DR

EN23-1782	Vegetation	07/17/2023	SUGARBROOK AREA	1622 MOLLIE ST
EN23-1783	Vegetation	07/17/2023	SOUTH DISTRICT	9660 WHITE TAIL DR
EN23-1784	Vegetation	07/17/2023	HOLMES ROAD AREA	930 HUNTER AVE
EN23-1785	Blight	07/17/2023	SOUTH DISTRICT	5406 HIGH RIDGE DR
EN23-1786	Solid Waste	07/17/2023	HOLMES ROAD AREA	1250 REDLEAF LN
EN23-1787	Vegetation	07/17/2023	HOLMES ROAD AREA	942 HUNTER AVE
EN23-1788	Solid Waste	07/17/2023	SUGARBROOK AREA	1610 CONWAY ST
EN23-1789	Parking	07/17/2023	GAULT VILLAGE AREA	1172 LESTER AVE
EN23-1790	Vegetation	07/17/2023	GAULT VILLAGE AREA	1148 LESTER AVE
EN23-1791	Vegetation	07/18/2023	GAULT VILLAGE AREA	1023 LEVONA ST
EN23-1792	Vegetation	07/18/2023	SOUTH DISTRICT	5754 PRINCETON PL
EN23-1793	Blight	07/18/2023	GAULT VILLAGE AREA	1133 EVELYN AVE
EN23-1794	MULTI	07/18/2023	SUGARBROOK AREA	1729 KNOWLES ST
EN23-1795	Vegetation	07/18/2023	SOUTH DISTRICT	7268 MAPLELAWN DR
EN23-1796	Vegetation	07/18/2023	HOLMES ROAD AREA	1398 HUNTER AVE
EN23-1797	BB HOOP	07/18/2023	SOUTH DISTRICT	8843 TAMARACK LN
EN23-1798	Vegetation	07/18/2023	SOUTH DISTRICT	5977 S MOHAWK AVE
EN23-1799	BB HOOP	07/18/2023	SOUTH DISTRICT	8870 TAMARACK LN
EN23-1800	Solid Waste	07/18/2023	SOUTH DISTRICT	6012 S IVANHOE AVE
EN23-1801	Vegetation	07/18/2023	WEST WILLOW	1151 WOODGLEN AVE
EN23-1802	Solid Waste	07/18/2023	HOLMES ROAD AREA	1384 HUNTER AVE
EN23-1803	Vegetation	07/18/2023	HOLMES ROAD AREA	1299 HUNTER AVE
EN23-1804	Blight	07/19/2023	OAKLAWN/HAWTHORNE AREA	600 WHARTON ST
EN23-1805	Vegetation	07/19/2023	BUD/BLOSSOM AREA	1318 BLOSSOM AVE
EN23-1806	Vegetation	07/19/2023	BUD/BLOSSOM AREA	1312 BLOSSOM AVE
EN23-1807	Vegetation	07/19/2023	SOUTH DISTRICT	6178 EAGLE TRACE DR
EN23-1808	Blight	07/19/2023	LAY GARDENS AREA	1503 E MICHIGAN AVE
EN23-1809	Solid Waste	07/19/2023	LAY GARDENS AREA	507 HUNT PL
EN23-1810	Blight	07/19/2023	LAY GARDENS AREA	621 HOLLIS AVE
EN23-1811	Vegetation	07/19/2023	GAULT VILLAGE AREA	1100 LESTER AVE
EN23-1812	MULTI	07/19/2023	GAULT VILLAGE AREA	1211 SHARE AVE
EN23-1813	MULTI	07/19/2023	SUGARBROOK AREA	1499 GROVE RD
EN23-1814	Vegetation	07/19/2023	WEST WILLOW	1125 ZEPHYR ST
EN23-1815	Blight	07/19/2023	WEST WILLOW	683 ONANDAGA AVE

EN23-1816	Blight	07/19/2023	LAY GARDENS AREA	533 HUNT PL
EN23-1817	Solid Waste	07/19/2023	GAULT VILLAGE AREA	1187 EVELYN AVE
EN23-1818	Blight	07/19/2023	WEST WILLOW	1100 ZEPHYR ST
EN23-1819	Vegetation	07/19/2023	WEST WILLOW	1113 ZEPHYR ST
EN23-1820	Vegetation	07/19/2023	SOUTH DISTRICT	5958 BIG PINE DR
EN23-1821	Blight	07/19/2023	SOUTH DISTRICT	6585 ENCHANTED DR
EN23-1822	Vegetation	07/19/2023	SOUTH DISTRICT	5658 SUNSET TRL
EN23-1823	Solid Waste	07/19/2023	LAY GARDENS AREA	504 BROWNING ST
EN23-1824	Vegetation	07/19/2023	SOUTH DISTRICT	5863 S IVANHOE AVE
EN23-1825	Vegetation	07/19/2023	WEST WILLOW	1027 WOODGLEN AVE
EN23-1826	Vegetation	07/19/2023	SOUTH DISTRICT	5659 SUNSET TRL
EN23-1827	Vegetation	07/19/2023	THURSTON AREA	223 OHIO ST
EN23-1828	Vegetation	07/19/2023	THURSTON AREA	133 OHIO ST
EN23-1829	Zoning	07/19/2023	LAY GARDENS AREA	2628 E MICHIGAN AVE
EN23-1830	Vegetation	07/19/2023	LAY GARDENS AREA	571 HOLLIS AVE
EN23-1831	Vegetation	07/19/2023	SOUTH DISTRICT	5667 SUNSET TRL
EN23-1832	Solid Waste	07/19/2023	LAY GARDENS AREA	2628 E MICHIGAN AVE
EN23-1833	Solid Waste	07/19/2023	LAY GARDENA AREA	1690 HOLMES RD
EN23-1834	Vegetation	07/19/2023	THURSTON AREA	26 OHIO ST
EN23-1835	Vegetation	07/19/2023	SOUTH DISTRICT	5681 SUNSET TRL
EN23-1836	MULTI	07/20/2023	LAKEVIEW AREA	3240 GROVE RD
EN23-1837	Vegetation	07/20/2023	LAY GARDENS AREA	460 BROWNING ST
EN23-1838	Vegetation	07/20/2023	LAY GARDENS AREA	430 BROWNING ST
EN23-1839	Vegetation	07/28/2023	HOLMES ROAD AREA	1135 LEXINGTON PKWY
EN23-1840	Blight	07/20/2023	OAKLAWN/HAWTHORNE AREA	590 WOODLAWN AVE
EN23-1841	Property Maintenance - Motor Vehicle	07/20/2023	OAKLAWN/HAWTHORNE AREA	541 WOODLAWN AVE
EN23-1842	MULTI	07/20/2023		521 WOODLAWN AVE
EN23-1843	MULTI	07/20/2023	OAKLAWN/HAWTHORNE AREA	601 WOODLAWN AVE
EN23-1844	Blight	07/20/2023	OAKLAWN/HAWTHORNE AREA	610 WOODLAWN AVE
EN23-1845	Property Maintenance - Motor Vehicle	07/20/2023	OAKLAWN/HAWTHORNE AREA	611 WOODLAWN AVE
EN23-1846	Blight	07/20/2023	OAKLAWN/HAWTHORNE AREA	650 WOODLAWN AVE
EN23-1847	MULTI	07/20/2023	OAKLAWN/HAWTHORNE AREA	637 GREENLAWN ST
EN23-1848	Blight	07/20/2023		1424 ECORSE RD
EN23-1849	Property Maintenance - Motor Vehicle	07/20/2023	OAKLAWN/HAWTHORNE AREA	587 GREENLAWN ST

EN23-1850	Vegetation	07/20/2023	OAKLAWN/HAWTHORNE AREA	560 GREENLAWN ST
EN23-1851	Blight	07/20/2023	OAKLAWN/HAWTHORNE AREA	551 GREENLAWN ST
EN23-1852	Zoning	07/20/2023	OAKLAWN/HAWTHORNE AREA	541 GREENLAWN ST
EN23-1853	Vegetation	07/20/2023	WEST WILLOW	559 NASH AVE
EN23-1854	Vacant Property/Building Investigation	07/20/2023	APPLERIDGE AREA	2754 APPLERIDGE ST
EN23-1855	Vacant Property/Building Investigation	07/20/2023		2500 HOLMES RD
EN23-1856	Vacant Property/Building Investigation	07/20/2023		3011 E MICHIGAN AVE
EN23-1857	Vacant Property/Building Investigation	07/20/2023	HOLMES ROAD AREA	1143 LAUREL CT
EN23-1858	Vacant Property/Building Investigation	07/20/2023	LAY GARDENS AREA	869 ALLEN RD
EN23-1859	Vacant Property/Building Investigation	07/20/2023	LAY GARDENS AREA	832 JEROME AVE
EN23-1860	Vacant Property/Building Investigation	07/20/2023		880 N FORD BLVD
EN23-1861	Vacant Property/Building Investigation	07/20/2023	LAY GARDENS AREA	793 N FORD BLVD
EN23-1862	Vacant Property/Building Investigation	07/20/2023		1601 E MICHIGAN AVE
EN23-1863	Vacant Building Property Maintenance Inspec	07/20/2023	HOLMES ROAD AREA	1241 RAMBLING RD
EN23-1864	Vacant Property/Building Investigation	07/20/2023	HOLMES ROAD AREA	1270 WENDELL AVE
EN23-1865	Vacant Property/Building Investigation	07/20/2023	HOLMES ROAD AREA	966 N PROSPECT RD
EN23-1866	Vacant Property/Building Investigation	07/20/2023	LAY GARDENS AREA	860 TWIN TOWERS ST
EN23-1867	Vacant Property/Building Investigation	07/20/2023	LAY GARDENS AREA	408 CAMPBELL AVE
EN23-1868	Vacant Property/Building Investigation	07/20/2023	LAY GARDENS AREA	626 LYNNE AVE
EN23-1869	Vacant Property/Building Investigation	07/20/2023	LAY GARDENS AREA	664 N IVANHOE AVE
EN23-1870	Vacant Property/Building Investigation	07/20/2023	LAY GARDENS AREA	551 N HARRIS RD
EN23-1871	Vacant Property/Building Investigation	07/20/2023	LAY GARDENS AREA	1241 E CROSS ST
EN23-1872	Vacant Property/Building Investigation	07/20/2023	HOLMES ROAD AREA	415 W CLARK RD
EN23-1873	Vacant Property/Building Investigation	07/20/2023	HEWITT ROAD AREA	2436 BURNS AVE
EN23-1874	Vacant Property/Building Investigation	07/20/2023	HEWITT ROAD AREA	2411 DRAPER AVE
EN23-1875	Vacant Property/Building Investigation	07/20/2023	LAY GARDENS AREA	109 JOHNSON ST
EN23-1876	Vacant Property/Building Investigation	07/20/2023	OAKLAWN/HAWTHORNE AREA	161 ECORSE RD
EN23-1877	Vacant Property/Building Investigation	07/20/2023	OAKLAWN/HAWTHORNE AREA	1018 MAPLEWOOD AVE
EN23-1878	Vacant Property/Building Investigation	07/20/2023	THURSTON AREA	58 OREGON ST
EN23-1879	Vacant Property/Building Investigation	07/20/2023	THURSTON AREA	287 KANSAS AVE
EN23-1880	Vacant Property/Building Investigation	07/20/2023	THURSTON AREA	281 OHIO ST
EN23-1881	Vacant Property/Building Investigation	07/20/2023		336 S FORD BLVD
EN23-1882	Vacant Property/Building Investigation	07/20/2023		330 S FORD BLVD
EN23-1883	Vacant Property/Building Investigation	07/20/2023		1474 ECORSE RD

EN23-1884	Vacant Property/Building Investigation	07/20/2023	WEST WILLOW	802 DORSET AVE
EN23-1885	Vacant Property/Building Investigation	07/20/2023	WEST WILLOW	579 ONANDAGA AVE
EN23-1886	Vacant Property/Building Investigation	07/20/2023	WEST WILLOW	660 EUGENE ST
EN23-1887	Vacant Property/Building Investigation	07/20/2023	WEST WILLOW	735 OSWEGO AVE
EN23-1888	Vacant Property/Building Investigation	07/20/2023	WEST WILLOW	885 DESOTO AVE
EN23-1889	Vacant Property/Building Investigation	07/20/2023	WEST WILLOW	900 NASH AVE
EN23-1890	Vacant Property/Building Investigation	07/20/2023		1769 CADILLAC AVE
EN23-1891	Vacant Property/Building Investigation	07/20/2023	WEST WILLOW	1175 NASH AVE
EN23-1892	Vacant Property/Building Investigation	07/20/2023	WEST WILLOW	1053 NASH AVE
EN23-1893	Vacant Property/Building Investigation	07/20/2023	WEST WILLOW	1041 NASH AVE
EN23-1894	Vacant Property/Building Investigation	07/20/2023	WEST WILLOW	1074 NASH AVE
EN23-1895	Vacant Property/Building Investigation	07/20/2023	WEST WILLOW	1051 STUDEBAKER AVE
EN23-1896	Vacant Property/Building Investigation	07/20/2023	WEST WILLOW	1145 STUDEBAKER AVE
EN23-1897	Vacant Property/Building Investigation	07/20/2023	WEST WILLOW	2106 CHEVROLET AVE
EN23-1898	Vacant Property/Building Investigation	07/20/2023	SUGARBROOK AREA	1497 GATTEGNO ST
EN23-1899	Vacant Property/Building Investigation	07/20/2023	SUGARBROOK AREA	1332 ANDREA ST
EN23-1900	Vacant Property/Building Investigation	07/20/2023	SUGARBROOK AREA	1510 MELVIN ST
EN23-1901	Vacant Property/Building Investigation	07/20/2023	SUGARBROOK AREA	1584 WISMER ST
EN23-1902	Vacant Property/Building Investigation	07/20/2023	SUGARBROOK AREA	1535 WISMER ST
EN23-1903	Vacant Property/Building Investigation	07/20/2023	CLIFFS ON THE BAY CONDOS	1740 GROVE RD A-306
EN23-1904	Vacant Property/Building Investigation	07/20/2023	LAKEVIEW AREA	2214 HARMON ST
EN23-1905	Vacant Property/Building Investigation	07/20/2023	LAKEVIEW AREA	1831 PATRICK ST
EN23-1906	Vacant Property/Building Investigation	07/20/2023	GAULT VILLAGE AREA	1191 HULL AVE
EN23-1907	Vacant Property/Building Investigation	07/20/2023	GAULT VILLAGE AREA	1110 RUTH AVE
EN23-1908	Vacant Property/Building Investigation	07/20/2023	GAULT VILLAGE AREA	1205 GEORGINA DR
EN23-1909	Vacant Property/Building Investigation	07/20/2023		1349 S HURON ST
EN23-1910	Vacant Property/Building Investigation	07/20/2023		2515 ELLSWORTH RD
EN23-1911	Vacant Property/Building Investigation	07/20/2023	SOUTH DISTRICT	8045 LAKE CREST DR
EN23-1912	Vacant Property/Building Investigation	07/20/2023	LAKEVIEW AREA	2309 GROVE RD
EN23-1913	Vacant Property/Building Investigation	07/20/2023	HARBOUR COVE CONDOS	9567 HARBOUR COVE CT
EN23-1914	Vacant Property/Building Investigation	07/20/2023	HARBOUR COVE CONDOS	9699 HARBOUR COVE CT
EN23-1915	Vacant Property/Building Investigation	07/20/2023	LAKEVIEW AREA	2120 BRADLEY AVE
EN23-1916	Vacant Property/Building Investigation	07/20/2023	LAKEVIEW AREA	2164 WOODALE AVE
EN23-1917	Vacant Property/Building Investigation	07/20/2023	SOUTH DISTRICT	6052 RAWSONVILLE RD

EN23-1918	Vacant Property/Building Investigation	07/20/2023	SOUTH DISTRICT	6050 RAWSONVILLE RD
EN23-1919	Vacant Property/Building Investigation	07/20/2023	SOUTH DISTRICT	6601 MCKEAN RD
EN23-1920	Vacant Property/Building Investigation	07/20/2023	SOUTH DISTRICT	9822 WOODLAND CT
EN23-1921	Vacant Property/Building Investigation	07/20/2023	SOUTH DISTRICT	6050 S IVANHOE AVE
EN23-1922	Vacant Property/Building Investigation	07/20/2023	SOUTH DISTRICT	6367 JONQUIL LN
EN23-1923	Vacant Property/Building Investigation	07/20/2023	SOUTH DISTRICT	6226 MAPLEHURST DR
EN23-1925	Vacant Property/Building Investigation	07/20/2023	SOUTH DISTRICT	6380 STONY CREEK RD #1
EN23-1926	Vacant Property/Building Investigation	07/20/2023	SOUTH DISTRICT	6380 STONY CREEK RD #2
EN23-1927	Vacant Property/Building Investigation	07/20/2023	SOUTH DISTRICT	5276 TEXTILE RD
EN23-1928	Vacant Property/Building Investigation	07/20/2023	SOUTH DISTRICT	7361 COLCHESTER LN
EN23-1929	Vacant Property/Building Investigation	07/20/2023	STEVENS PARK AREA	617 S HEWITT RD
EN23-1930	Vacant Property/Building Investigation	07/20/2023	STEVENS PARK AREA	39 S HEWITT RD
EN23-1931	Blight	07/20/2023		2171 GROVE RD
EN23-1932	Solid Waste	07/20/2023	SOUTH DISTRICT	5239 APPLEWOOD DR
EN23-1933	Vegetation	07/20/2023	LAY GARDENS AREA	1691 E FOREST AVE
EN23-1934	Vegetation	07/20/2023	WEST WILLOW	921 DESOTO AVE
EN23-1935	Solid Waste	07/20/2023	LAY GARDENS AREA	1096 HOLMES RD
EN23-1936	Property Maintenance - Motor Vehicle	07/20/2023	WEST WILLOW	531 HUDSON ST
EN23-1937	Blight	07/20/2023	WEST WILLOW	630 DESOTO AVE
EN23-1938	Property Maintenance - Motor Vehicle	07/20/2023	WEST WILLOW	855 DESOTO AVE
EN23-1939	Blight	07/20/2023	LAKEVIEW AREA	2217 DAVID AVE
EN23-1940	Vegetation	07/20/2023	SUGARBROOK AREA	1333 HARRY ST
EN23-1941	Blight	07/20/2023	WEST WILLOW	890 DESOTO AVE
EN23-1942	Basketball Hoop	07/19/2023	HOLMES ROAD AREA	1152 RAMBLING RD
EN23-1943	Vegetation	07/19/2023	OAKLAWN/HAWTHORNE AREA	1039 PARKWOOD AVE
EN23-1944	Solid Waste	07/21/2023	OAKLAWN/HAWTHORNE AREA	958 ECORSE RD
EN23-1945	Blight	07/21/2023	WEST WILLOW	1465 DESOTO AVE
EN23-1946	MULTI	07/21/2023	LAKEVIEW AREA	1917 GROVE RD
EN23-1947	Vegetation	07/24/2023	GAULT VILLAGE AREA	1339 MOLNER CT
EN23-1948	Rental - Unregistered	07/24/2023	SOUTH DISTRICT	7186 RAWSONVILLE RD
EN23-1949	Vegetation	07/24/2023	WEST WILLOW	1679 S PASADENA ST
EN23-1950	Vegetation	07/24/2023	WEST WILLOW	1650 MCCARTNEY AVE
EN23-1951	Vegetation	07/24/2023	OAKLAWN/HAWTHORNE AREA	371 S HARRIS RD
EN23-1952	Zoning	07/24/2023	GAULT VILLAGE AREA	1174 GAULT DR

EN23-1953	Solid Waste	07/24/2023	SUGARBROOK AREA	1353 ROLLING CT
EN23-1955	Vegetation	07/24/2023	BUD/BLOSSOM AREA	1341 BLOSSOM AVE
EN23-1956	Vegetation	07/24/2023	LAY GARDENS AREA	145 N FORD BLVD
EN23-1957	Vegetation	07/24/2023	OAKLAWN/HAWTHORNE AREA	580 KENNEDY AVE
EN23-1958	Vegetation	07/24/2023	OAKLAWN/HAWTHORNE AREA	590 KENNEDY AVE
EN23-1959	Solid Waste	07/24/2023	SOUTH DISTRICT	7263 RACHEL DR
EN23-1960	MULTI	07/24/2023		531 WOODLAWN AVE
EN23-1961	MULTI	07/24/2023		1482 ECORSE RD
EN23-1962	Blight	07/24/2023	WEST WILLOW	1016 ZEPHYR ST
EN23-1963	Blight	07/24/2023	WEST WILLOW	2360 CEDARCLIFF AVE
EN23-1964	Vegetation	07/24/2023	GAULT VILLAGE AREA	1144 SHARE AVE
EN23-1965	Solid Waste	07/24/2023	WEST WILLOW	1086 LORI ST
EN23-1966	Solid Waste	07/24/2023	WESTLAWN AREA	2911 SOUTHLAWN ST
EN23-1967	Solid Waste	07/24/2023	APPLERIDGE AREA	2716 WOODRUFF LN
EN23-1968	Property Maintenance	07/24/2023	LAY GARDENS AREA	1246 E FOREST AVE
EN23-1969	Blight	07/24/2023	LAY GARDENS AREA	850 ALLEN RD
EN23-1970	Vacant Property/Building Investigation	07/24/2023	LAY GARDENS AREA	850 ALLEN RD
EN23-1971	Vegetation	07/24/2023	SOUTH DISTRICT	5438 GRAYFIELD CIR
EN23-1972	Blight	07/24/2023	Hewitt Road Area	89 HILLCREST BLVD
EN23-1973	Blight	07/24/2023	SUGARBROOK AREA	1681 CONWAY ST
EN23-1974	Property Maintenance - Motor Vehicle	07/24/2023	SUGARBROOK AREA	1376 MCCARTHY CT
EN23-1975	Vegetation	07/25/2023	SUGARBROOK AREA	1577 WISMER ST
EN23-1976	Solid Waste	07/25/2023	SOUTH DISTRICT	5563 MICHAEL DR
EN23-1977	Solid Waste	07/25/2023	SOUTH DISTRICT	8284 THORNHILL DR
EN23-1978	Vegetation	07/25/2023	HOLMES ROAD AREA	1055 COMMONWEALTH AVE
EN23-1979	Blight	07/25/2023	SOUTH DISTRICT	5933 WILLOWBRIDGE RD
EN23-1980	Vegetation	07/25/2023	HOLMES ROAD AREA	1250 COMMONWEALTH AVE
EN23-1981	Vegetation	07/25/2023	WEST WILLOW	1649 S PASADENA ST
EN23-1982	Solid Waste	07/25/2023	HOLMES ROAD AREA	1365 DELAWARE AVE
EN23-1983	Blight	07/25/2023	SOUTH DISTRICT	5754 PRINCETON PL
EN23-1984	Solid Waste	07/25/2023	SUGARBROOK AREA	1449 HARRY ST
EN23-1985	Vegetation	07/25/2023	WEST WILLOW	1629 S PASADENA ST
EN23-1986	Blight	07/25/2023	SOUTH DISTRICT	5786 SUNSET TRL
EN23-1987	Solid Waste	07/25/2023	SOUTH DISTRICT	6552 ENCHANTED DR

EN23-1988	Vegetation	07/25/2023	SOUTH DISTRICT	5694 HIGH RIDGE DR
EN23-1989	Vegetation	07/25/2023	LAKEVIEW AREA	2065 MOELLER AVE
EN23-1990	MULTI	07/25/2023	LAY GARDENS AREA	872 LAMAY AVE
EN23-1991	Solid Waste	07/25/2023	LAY GARDENS AREA	773 LAMAY AVE
EN23-1992	Vegetation	07/25/2023	WEST WILLOW	656 OSWEGO AVE
EN23-1993	Vegetation	07/25/2023	SOUTH DISTRICT	7865 WINTERFIELD DR
EN23-1994	Solid Waste	07/25/2023	HOLMES ROAD AREA	1197 HUNTER AVE
EN23-1996	Vegetation	07/26/2023	PINEVIEW AREA	5512 N EAGLE CT
EN23-1997	Vegetation	07/26/2023	LAY GARDENS AREA	820 N HARRIS RD
EN23-1998	Solid Waste	07/26/2023	SHERMAN OAKS AREA	1132 ELLIS RD
EN23-1999	Vegetation	07/26/2023	LAY GARDENS AREA	800 N HARRIS RD
EN23-2000	Solid Waste	07/26/2023	PINEVIEW AREA	5611 S EAGLE CT
EN23-2001	Solid Waste	07/26/2023	LAKEVIEW AREA	2194 MCGREGOR RD
EN23-2002	Solid Waste	07/26/2023	OAKLAWN/HAWTHORNE AREA	613 KANSAS AVE
EN23-2003	Blight	07/26/2023	SUGARBROOK AREA	1411 GROVE RD
EN23-2004	Vegetation	07/27/2023	OAKLAWN/HAWTHORNE AREA	439 HAYES ST
EN23-2005	Vegetation	07/27/2023	SOUTH DISTRICT	7389 RED BIRD DR
EN23-2006	Vegetation	07/27/2023	SOUTH DISTRICT	7402 RED BIRD DR
EN23-2007	Property Maintenance	07/27/2023	SCHOONER COVE	8695 SPINNAKER WAY
EN23-2008	Work Without Permits	07/27/2023	WEST WILLOW	576 DESOTO AVE
EN23-2009	Zoning	07/27/2023	LAKEVIEW AREA	2161 WOODALE AVE
EN23-2010	Zoning	07/27/2023	LAKEVIEW AREA	2158 WOODALE AVE
EN23-2011	Vegetation	07/27/2023	WEST WILLOW	1125 DESOTO AVE
EN23-2012	MULTI	07/27/2023	THURSTON AREA	281 OHIO ST
EN23-2013	MULTI	07/27/2023	WEST WILLOW	1448 NASH AVE
EN23-2014	Vegetation	07/27/2023	Hewitt Road Area	89 HILLCREST BLVD
EN23-2015	Property Maintenance - Motor Vehicle	07/27/2023	WEST WILLOW	794 DESOTO AVE
EN23-2016	Vegetation	07/27/2023	WEST WILLOW	785 DESOTO AVE
EN23-2017	Vegetation	07/28/2023	GAULT VILLAGE AREA	1341 MOLNER CT
EN23-2018	Property Maintenance	07/28/2023	OAKLAWN/HAWTHORNE AREA	655 GLENWOOD AVE
EN23-2019	Blight	07/28/2023	OAKLAWN/HAWTHORNE AREA	371 S HARRIS RD
EN23-2020	Blight	07/28/2023	OAKLAWN/HAWTHORNE AREA	366 GREENLAWN ST
EN23-2021	Vegetation	07/28/2023	SOUTH DISTRICT	7142 RACHEL DR
EN23-2022	Vegetation	07/28/2023	SOUTH DISTRICT	7143 RACHEL DR

EN23-2023	Vegetation	07/28/2023	WEST WILLOW	890 NASH AVE
EN23-2024	Vegetation	07/28/2023	WEST WILLOW	579 EUGENE ST
EN23-2025	Vegetation	07/28/2023	WEST WILLOW	670 DESOTO AVE
EN23-2026	Vegetation	07/28/2023	SOUTH DISTRICT	7166 RACHEL DR
EN23-2027	Vegetation	07/28/2023	WEST WILLOW	536 DESOTO AVE
EN23-2028	Solid Waste	07/28/2023	HEWITT ROAD AREA	2959 MAZIN CT
EN23-2029	Solid Waste	07/28/2023	HEWITT ROAD AREA	2983 MAZIN CT
EN23-2030	Vegetation	07/28/2023	HEWITT ROAD AREA	122 GOLFVIEW DR
EN23-2031	Vegetation	07/28/2023	HEWITT ROAD AREA	2964 MAZIN CT
EN23-2032	Vegetation	07/28/2023	SOUTH DISTRICT	7154 RACHEL DR
EN23-2033	Blight	07/28/2023	HEWITT ROAD AREA	122 GOLFVIEW DR
EN23-2034	Vegetation	07/28/2023	SOUTH DISTRICT	7824 THORNHILL DR
EN23-2035	Solid Waste	07/28/2023	LAKEVIEW AREA	2225 GEORGE AVE
EN23-2036	Vacant Property/Building Investigation	07/28/2023	SOUTH DISTRICT	7824 THORNHILL DR
EN23-2037	Blight	07/28/2023	WESTLAWN AREA	2635 NORTHLAWN AVE
EN23-2038	Solid Waste	07/28/2023	STEVENS PARK AREA	32 S MANSFIELD ST
EN23-2039	Vacant Property/Building Investigation	07/28/2023	WESTLAWN AREA	3110 SOUTHLAWN ST
EN23-2040	Assist General	07/31/2023	SOUTH DISTRICT	7200 S HURON RIVER DR
EN23-2041	Condemnation	07/28/2023		9999 TEXTILE RD
EN23-2043	Solid Waste	07/31/2023	HOLMES ROAD AREA	1197 HUNTER AVE
EN23-2044	Vegetation	07/31/2023	HEWITT ROAD AREA	2260 HARDING AVE
EN23-2045	Parking	07/31/2023	GAULT VILLAGE AREA	1174 GAULT DR
EN23-2046	Blight	07/31/2023	SUGARBROOK AREA	1404 MELVIN ST
EN23-2047	MULTI	07/31/2023	LAY GARDENS AREA	841 N FORD BLVD
EN23-2048	Rental - Unregistered	07/31/2023	HEWITT ROAD AREA	2000 MIDVALE ST
EN23-2049	Rental - Unregistered	07/31/2023	THURSTON AREA	357 OHIO ST
EN23-2050	Zoning	07/31/2023	SUGARBROOK AREA	1654 WISMER ST
EN23-2051	Blight	07/31/2023	SOUTH DISTRICT	5196 APPLEWOOD DR
EN23-2052	Vacant Property/Building Investigation	07/31/2023	SUGARBROOK AREA	1428 FOLEY AVE
EN23-2053	Vegetation	07/31/2023	OAKLAWN/HAWTHORNE AREA	1130 ECORSE RD
EN23-2054	Vegetation	07/31/2023	HOLMES ROAD AREA	1346 RAMBLING RD
EN23-2055	Solid Waste	07/31/2023	SHERMAN OAKS AREA	2450 CANYON DR
EN23-2056	Solid Waste	07/31/2023	LAKEVIEW AREA	1925 SMITH ST
EN23-2057	Property Maintenance - Motor Vehicle	07/31/2023	OAKLAWN/HAWTHORNE AREA	361 S HARRIS RD

EN23-2058	Blight	07/31/2023	OAKLAWN/HAWTHORNE AREA	448 WOODLAWN AVE
EN23-2059	Solid Waste	07/31/2023	LAKEVIEW AREA	1864 EMERSON AVE
EN23-2060	Vegetation	07/31/2023	LAKEVIEW AREA	1796 S PASADENA ST
EN23-2061	Vegetation	07/31/2023	WEST WILLOW	542 HUDSON ST
EN23-2062	Property Maintenance - Motor Vehicle	07/31/2023	LAY GARDENS AREA	98 ALLEN RD
EN23-2063	Solid Waste	07/31/2023	WEST WILLOW	670 CALDER AVE
EN23-2064	Solid Waste	07/31/2023	OAKLAWN/HAWTHORNE AREA	534 GLENWOOD AVE
EN23-2065	Solid Waste	07/31/2023	WEST WILLOW	1210 DESOTO AVE
EN23-2066	Vegetation	07/31/2023	LAY GARDENS AREA	722 JEROME AVE
EN23-2067	Solid Waste	07/31/2023	WEST WILLOW	2373 RAVINEWOOD AVE
EN23-2068	Solid Waste	07/31/2023	WEST WILLOW	522 HUDSON ST
EN23-2069	Rental - Unregistered	07/31/2023	WEST WILLOW	1175 NASH AVE
EN23-2070	Blight	07/31/2023	SUGARBROOK AREA	1412 MELVIN ST
EN23-2071	Solid Waste	07/31/2023	LAKEVIEW AREA	1741 VICTOR ST
EN23-2072	Vegetation	07/31/2023	SUGARBROOK AREA	1412 MELVIN ST

New Rental Housing Certifications - July 2023

Parcel Number	Address Display String	Cert Type	Cert Number	Status
K -11-01-204-004	2733 APPLERIDGE ST	Rental 24	CSFR-22-0495	Certified
K -11-01-204-013	2797 APPLERIDGE ST	Rental 24	CSFR-22-0679	Certified
K -11-01-235-015	1445 BUD AVE	Rental 24	CSFR-22-1229	Certified
K -11-02-250-011	1280 LAUREL AVE	Rental 24	CSFR-22-1245	Certified
K -11-02-258-001	1042 HUNTER AVE	Rental 24	CSFR-22-1263	Certified
K -11-02-327-025	715 E GRAND BLVD	Rental 24	CSFR-23-0134	Certified
K -11-03-201-028	1281 RUE DEAUVILLE BLVD	Rental 24	CSFR-23-0052	Certified
K -11-03-300-047	932 HOLMES RD 6	Multi-Family Rental Inspection	CMFR-22-0086	Certified
K -11-03-300-047	934 HOLMES RD 1	Multi-Family Rental Inspection	CMFR-22-0088	Certified
K -11-03-381-011	626 CAMPBELL AVE	Rental 24	CSFR-23-0144	Certified
K -11-11-276-036	264 OREGON ST	Rental 24	CSFR-23-0033	Certified
K -11-14-106-010	1099 BUICK AVE	Rental 24	CSFR-22-1075	Certified
K -11-14-107-017	1185 DESOTO AVE	Rental 24	CSFR-22-1305	Certified
K -11-15-300-001	1632 W LAUREL BAY DR	Multi-Family Rental Inspection	CMFR-22-1356	Certified
K -11-15-300-001	1624 W LAUREL BAY DR	Multi-Family Rental Inspection	CMFR-22-1358	Certified
K -11-15-300-001	1616 W LAUREL BAY DR	Multi-Family Rental Inspection	CMFR-22-1359	Certified
K -11-15-300-001	1608 W LAUREL BAY DR	Multi-Family Rental Inspection	CMFR-22-1360	Certified
K -11-15-300-001	1640 W LAUREL BAY DR	Multi-Family Rental Inspection	CMFR-22-1363	Certified
K -11-15-300-001	1648 W LAUREL BAY DR	Multi-Family Rental Inspection	CMFR-22-1364	Certified
K -11-15-300-001	1656 W LAUREL BAY DR	Multi-Family Rental Inspection	CMFR-22-1366	Certified
K -11-15-300-001	1664 W LAUREL BAY DR	Multi-Family Rental Inspection	CMFR-22-1368	Certified
K -11-15-300-001	1672 W LAUREL BAY DR	Multi-Family Rental Inspection	CMFR-22-1369	Certified
K -11-15-300-001	1694 W LAUREL BAY DR	Multi-Family Rental Inspection	CMFR-22-1379	Certified
K -11-15-300-001	1702 W LAUREL BAY DR	Multi-Family Rental Inspection	CMFR-22-1380	Certified
K -11-15-300-001	1710 W LAUREL BAY DR	Multi-Family Rental Inspection	CMFR-22-1382	Certified
K -11-15-300-001	1718 W LAUREL BAY DR	Multi-Family Rental Inspection	CMFR-22-1383	Certified
K -11-15-300-001	1726 W LAUREL BAY DR	Multi-Family Rental Inspection	CMFR-22-1385	Certified
K -11-15-300-001	1734 W LAUREL BAY DR	Multi-Family Rental Inspection	CMFR-22-1386	Certified
K -11-15-300-001	1742 W LAUREL BAY DR	Multi-Family Rental Inspection	CMFR-22-1388	Certified
K -11-15-300-001	1750 W LAUREL BAY DR	Multi-Family Rental Inspection	CMFR-22-1390	Certified
K -11-15-300-001	1749 E LAUREL BAY DR	Multi-Family Rental Inspection	CMFR-22-1401	Certified

K -11-15-300-001	1757 E LAUREL BAY DR	Multi-Family Rental Inspection	CMFR-22-1402	Certified
K -11-15-300-001	1765 E LAUREL BAY DR	Multi-Family Rental Inspection	CMFR-22-1404	Certified
K -11-15-300-001	1781 E LAUREL BAY DR	Multi-Family Rental Inspection	CMFR-22-1406	Certified
K -11-15-300-001	1789 E LAUREL BAY DR	Multi-Family Rental Inspection	CMFR-22-1408	Certified
K -11-15-300-001	1709 E LAUREL BAY DR LAUNDRY ROOM	Multi-Family Rental Inspection	CMFR-22-1411	Certified
K -11-15-300-001	1709 E LAUREL BAY DR	Multi-Family Rental Inspection	CMFR-22-1412	Certified
K -11-15-300-001	1717 E LAUREL BAY DR	Multi-Family Rental Inspection	CMFR-22-1413	Certified
K -11-15-300-001	1725 E LAUREL BAY DR	Multi-Family Rental Inspection	CMFR-22-1414	Certified
K -11-15-300-001	1733 E LAUREL BAY DR	Multi-Family Rental Inspection	CMFR-22-1415	Certified
K -11-15-300-001	1741 E LAUREL BAY DR	Multi-Family Rental Inspection	CMFR-22-1416	Certified
K -11-15-300-001	1683 E LAUREL BAY DR	Multi-Family Rental Inspection	CMFR-22-1419	Certified
K -11-15-300-001	1675 E LAUREL BAY DR	Multi-Family Rental Inspection	CMFR-22-1420	Certified
K -11-15-300-001	1667 E LAUREL BAY DR	Multi-Family Rental Inspection	CMFR-22-1421	Certified
K -11-15-300-001	1658 E LAUREL BAY DR	Multi-Family Rental Inspection	CMFR-22-1422	Certified
K -11-15-300-001	1666 E LAUREL BAY DR	Multi-Family Rental Inspection	CMFR-22-1423	Certified
K -11-15-300-001	1674 E LAUREL BAY DR	Multi-Family Rental Inspection	CMFR-22-1424	Certified
K -11-15-300-001	1611 E LAUREL BAY DR	Multi-Family Rental Inspection	CMFR-22-1427	Certified
K -11-15-300-001	1619 E LAUREL BAY DR	Multi-Family Rental Inspection	CMFR-22-1428	Certified
K -11-15-300-001	1627 E LAUREL BAY DR	Multi-Family Rental Inspection	CMFR-22-1429	Certified
K -11-15-300-001	1635 E LAUREL BAY DR	Multi-Family Rental Inspection	CMFR-22-1430	Certified
K -11-15-300-001	1643 E LAUREL BAY DR	Multi-Family Rental Inspection	CMFR-22-1431	Certified
K -11-15-300-001	1651 E LAUREL BAY DR	Multi-Family Rental Inspection	CMFR-22-1432	Certified
K -11-15-300-001	1659 E LAUREL BAY DR	Multi-Family Rental Inspection	CMFR-22-1433	Certified
K -11-15-300-001	1610 E LAUREL BAY DR	Multi-Family Rental Inspection	CMFR-22-1435	Certified
K -11-15-300-001	1618 E LAUREL BAY DR	Multi-Family Rental Inspection	CMFR-22-1436	Certified
K -11-15-300-001	1626 E LAUREL BAY DR	Multi-Family Rental Inspection	CMFR-22-1437	Certified
K -11-15-300-001	1607 W LAUREL BAY DR	Multi-Family Rental Inspection	CMFR-22-1439	Certified
K -11-15-300-001	1615 W LAUREL BAY DR	Multi-Family Rental Inspection	CMFR-22-1440	Certified
K -11-15-300-001	1623 W LAUREL BAY DR	Multi-Family Rental Inspection	CMFR-22-1441	Certified
K -11-15-300-001	1631 W LAUREL BAY DR	Multi-Family Rental Inspection	CMFR-22-1442	Certified
K -11-15-300-001	1639 W LAUREL BAY DR	Multi-Family Rental Inspection	CMFR-22-1443	Certified
K -11-15-300-001	1634 E LAUREL BAY DR	Multi-Family Rental Inspection	CMFR-22-1445	Certified
K -11-15-300-001	1642 E LAUREL BAY DR	Multi-Family Rental Inspection	CMFR-22-1446	Certified
K -11-15-300-001	1647 W LAUREL BAY DR	Multi-Family Rental Inspection	CMFR-22-1448	Certified

K -11-15-300-001	1655 W LAUREL BAY DR	Multi-Family Rental Inspection	CMFR-22-1449	Certified
K -11-15-300-001	1679 W LAUREL BAY DR	Multi-Family Rental Inspection	CMFR-22-1452	Certified
K -11-15-300-001	1687 W LAUREL BAY DR	Multi-Family Rental Inspection	CMFR-22-1453	Certified
K -11-15-300-001	1682 E LAUREL BAY DR	Multi-Family Rental Inspection	CMFR-22-1454	Certified
K -11-15-300-001	1690 E LAUREL BAY DR	Multi-Family Rental Inspection	CMFR-22-1455	Certified
K -11-15-300-001	1698 E LAUREL BAY DR	Multi-Family Rental Inspection	CMFR-22-1456	Certified
K -11-15-300-001	1706 E LAUREL BAY DR	Multi-Family Rental Inspection	CMFR-22-1457	Certified
K -11-15-300-001	1722 E LAUREL BAY DR	Multi-Family Rental Inspection	CMFR-22-1459	Certified
K -11-15-300-001	1730 E LAUREL BAY DR	Multi-Family Rental Inspection	CMFR-22-1460	Certified
K -11-15-300-001	1738 E LAUREL BAY DR	Multi-Family Rental Inspection	CMFR-22-1461	Certified
K -11-29-300-030	6560 STONY CREEK RD	Rental 24	CSFR-23-0069	Certified

New Vacant Structure Applications - July 2023

Parcel Number	Address Display String	Cert Type	Cert Number	Status
K -11-01-205-009	2850 APPLERIDGE ST	Vacant Residential	CVR-23-0017	Hold
K -11-11-361-001	1474 ECORSE RD	Vacant Commercial Building	CVC-23-0001	Certified
K -11-14-286-015	1765 LYNN CT	Vacant Residential	CVR-23-0019	Hold
K -11-14-307-035	1654 WISMER ST	Vacant Residential	CVR-23-0020	Hold
K -11-26-400-013	9817 WOODLAND CT	Vacant Residential	CVR-23-0018	Certified

Building Departmant Permits Issued - July 2023

Permit	Category	Date Issued	Permit #	Address Display String	Construction Value	Amount Paid	Date Finaled
Building	Res Alter/Repair	07/03/2023	PB23-0617	3046 ROUNDTREE BLVD	$15,736.00	$245.00	
Building	Res Solar Panel	07/05/2023	PB23-0606	7356 W BROOK DR	$7,040.00	$165.00	
Building	Construction/Sales Trailer	07/06/2023	PB23-0632	7400 KALITTA CT	$1.00	$75.00	
Building	Res Alter/Repair	07/06/2023	PB23-0595	7662 PAINT CREEK DR	$11,300.00	$205.00	07/24/2023
Building	Res Solar Panel	07/06/2023	PB23-0611	7250 NATALIE DR	$7,940.00	$150.00	
Building	Res Alter/Repair	07/06/2023	PB23-0625	7930 VALLEYVIEW DR	$4,490.00	$120.00	07/31/2023
Building	Res Misc.	07/07/2023	PB23-0621	1980 MCKINLEY AVE	$90,000.00	$985.00	
Building	Com Sign	07/11/2023	PB23-0416	2748 WASHTENAW RD	$19,000.00	$125.00	
Building	Church Alter/Repair	07/11/2023	PB23-0635	1800 PACKARD RD	$22,000.00	$565.00	
Building	Res Solar Panel	07/12/2023	PB23-0640	631 LYNNE AVE	$8,347.00	$175.00	07/28/2023
Building	Res Alter/Repair	07/12/2023	PB23-0215	189 N FORD BLVD	$20,000.00	$270.00	
Building	Res Addition	07/13/2023	PB23-0480	100 GREENSIDE ST	$176,000.00	$1,845.00	
Building	Res Misc Concrete	07/13/2023	PB23-0637	6841 SWAN LAKE CT	$6,500.00	$140.00	
Building	Res Addition	07/14/2023	PB23-0510	1055 EVELYN AVE	$40,000.00	$485.00	
Building	Com Alter/Repair	07/17/2023	PB23-0666	214 S HEWITT RD OFFICE	$36,000.00	$405.00	
Building	Com Alter/Repair	07/18/2023	PB23-0672	1100 SHARE AVE	$3,000.00	$75.00	
Building	Res Alter/Repair	07/18/2023	PB23-0653	2584 CANYON DR	$107,300.00	$1,165.00	
Building	Res Alter/Repair	07/18/2023	PB23-0633	8831 TAMARACK LN	$25,000.00	$335.00	
Building	Res Alter/Repair	07/19/2023	PB23-0674	2460 ROANOAKE DR	$7,525.00	$140.00	
Building	Com Sign	07/19/2023	PB23-0646	2120 RAWSONVILLE RD	$1.00	$175.00	
Building	Fire Repair (resid)	07/20/2023	PB23-0655	3007 SOUTHLAWN ST	$7,265.00	$165.00	
Building	Res Misc.	07/21/2023	PB23-0651	7331 SPY GLASS LN	$8,500.00	$175.00	
Building	Demolish Structure	07/24/2023	PB23-0685	7390 TEXTILE RD	$29,000.00	$335.00	
Building	Res Handicap Ramp	07/26/2023	PB23-0677	496 E GRAND BLVD	$10,000.00	$170.00	
Building	Com Alter/Repair	07/27/2023	PB23-0004	1286 ANNA J STEPP	$20,000.00	$545.00	
Building	Fire Repair (resid)	07/27/2023	PB23-0682	883 GROVE RD	$77,901.00	$850.00	
Building	Res Alter/Repair	07/28/2023	PB23-0704	8691 TRILLIUM DR	$23,800.00	$310.00	
Building	Com Roof	07/31/2023	PZP23-0097	850 S HEWITT RD	$206,250.00	$2,115.00	
Electrical	Electrical	07/27/2023	PE23-0331	1720 SMITH ST	$0.00	$75.00	
Electrical	Electrical	07/27/2023	PE23-0333	2580 WOODRUFF LN	$0.00	$75.00	
Electrical	Electrical	07/26/2023	PE23-0330	3046 ROUNDTREE BLVD	$0.00	$78.00	

Electrical	Electrical	07/27/2023	PE23-0332	7954 FAIRCREST DR	$0.00	$75.00	
Electrical	Electrical	07/24/2023	PE23-0324	43 EMERICK ST	$0.00	$441.00	
Electrical	Electrical	07/25/2023	PE23-0329	1251 S HURON ST	$0.00	$0.00	
Electrical	Electrical	07/25/2023	PE23-0328	6236 SCHUSS XING	$0.00	$75.00	
Electrical	Electrical	07/21/2023	PE23-0326	7883 BRIARBROOK DR	$0.00	$136.00	07/24/2023
Electrical	Electrical	07/21/2023	PE23-0327	8831 TAMARACK LN	$0.00	$125.00	
Electrical	Electrical	07/19/2023	PE23-0307	1948 MIDVALE ST	$0.00	$112.00	07/20/2023
Electrical	Electrical	07/19/2023	PE23-0139	189 N FORD BLVD	$0.00	$382.00	
Electrical	Electrical	07/19/2023	PE23-0322	1442 E MICHIGAN AVE	$0.00	$145.00	
Electrical	Electrical	07/19/2023	PE23-0323	2225 WASHTENAW RD	$0.00	$130.00	
Electrical	Electrical	07/18/2023	PE23-0320	7420 DORAL DR	$0.00	$85.00	08/01/2023
Electrical	Electrical	07/17/2023	PE23-0321	1181 WATSON ST	$0.00	$134.00	
Electrical	Electrical	07/14/2023	PE23-0313	1091 STUDEBAKER AVE	$0.00	$112.00	07/17/2023
Electrical	Electrical	07/14/2023	PE23-0316	10208 SWAN LAKE CIR	$0.00	$75.00	07/25/2023
Electrical	Electrical	07/14/2023	PE23-0318	10218 SWAN LAKE CIR	$0.00	$75.00	07/25/2023
Electrical	Electrical	07/14/2023	PE23-0317	10226 SWAN LAKE CIR	$0.00	$75.00	07/25/2023
Electrical	Electrical	07/13/2023	PE23-0315	7350 ROXBURY DR	$0.00	$75.00	
Electrical	Electrical	07/14/2023	PE23-0312	1274 N PROSPECT RD	$0.00	$113.00	
Electrical	Electrical	07/14/2023	PE23-0319	7795 GREENE FARM DR	$0.00	$140.00	07/31/2023
Electrical	Electrical	07/13/2023	PE23-0310	920 AUBURNDALE AVE	$0.00	$75.00	
Electrical	Electrical	07/13/2023	PE23-0305	7099 MISSION HILLS DR	$0.00	$75.00	
Electrical	Electrical	07/13/2023	PE23-0311	1520 S HARRIS RD	$0.00	$76.00	07/18/2023
Electrical	Electrical	07/13/2023	PE23-0314	445 E GRAND BLVD	$0.00	$75.00	
Electrical	Electrical	07/12/2023	PE23-0309	7390 TEXTILE RD	$0.00	$125.00	
Electrical	Electrical	07/12/2023	PE23-0306	631 LYNNE AVE	$0.00	$90.00	07/27/2023
Electrical	Electrical	07/08/2023	PE23-0303	7760 TROTTERS PARK ST	$0.00	$75.00	07/18/2023
Electrical	Electrical	07/10/2023	PE23-0296	145 OUTER LN	$0.00	$85.00	
Electrical	Electrical	07/10/2023	PE23-0304	601 HAYES ST	$0.00	$75.00	07/24/2023
Electrical	Electrical	07/10/2023	PE23-0300	7484 ESSEX DR	$0.00	$75.00	07/25/2023
Electrical	Electrical	07/06/2023	PE23-0295	7250 NATALIE DR	$0.00	$75.00	
Electrical	Electrical	07/06/2023	PE23-0301	1132 STUDEBAKER AVE	$0.00	$85.00	
Electrical	Electrical	07/05/2023	PE23-0292	7356 W BROOK DR	$0.00	$90.00	
Electrical	Electrical	07/06/2023	PE23-0299	8138 STARLING CT	$0.00	$75.00	
Electrical	Electrical	07/06/2023	PE23-0298	1824 HEATHERRIDGE ST	$0.00	$75.00	

Electrical	Electrical	07/01/2023	PE23-0297	2268 WOODALE AVE	$0.00	$75.00	
Fire Alarm	Fire Detection System	07/05/2023	PFA23-0008	251 AIRPORT INDUSTRIAL DF	$0.00	$340.00	
Fire Suppre	Fire Suppression	07/13/2023	PFS23-0009	2643 ELLSWORTH RD	$0.00	$250.00	07/17/2023
Mechanical	Mechanical	07/14/2023	PM23-0852	6561 ROBIN CT	$0.00	$75.00	07/20/2023
Mechanical	Mechanical	07/14/2023	PM23-0853	246 DEVONSHIRE RD	$0.00	$75.00	07/20/2023
Mechanical	Mechanical	07/14/2023	PM23-0841	1091 STUDEBAKER AVE	$0.00	$90.00	07/17/2023
Mechanical	Mechanical	07/13/2023	PM23-0843	7350 ROXBURY DR	$0.00	$105.00	
Mechanical	Mechanical	07/13/2023	PM23-0840	639 KENNEDY AVE	$0.00	$105.00	
Mechanical	Mechanical	07/13/2023	PM23-0810	1577 ANDREA ST	$0.00	$75.00	
Mechanical	Mechanical	07/14/2023	PM23-0849	6728 LOON HOLLOW DR	$0.00	$145.00	
Mechanical	Mechanical	07/14/2023	PM23-0850	7575 DORAL DR	$0.00	$75.00	
Mechanical	Mechanical	07/14/2023	PM23-0851	993 PARKWOOD AVE	$0.00	$148.00	
Mechanical	Mechanical	07/14/2023	PM23-0856	1412 NASH AVE	$0.00	$170.00	07/25/2023
Mechanical	Mechanical	07/12/2023	PM23-0835	1464 BLOSSOM AVE	$0.00	$105.00	
Mechanical	Mechanical	07/11/2023	PM23-0832	1315 HARRY ST	$0.00	$180.00	07/27/2023
Mechanical	Mechanical	07/11/2023	PM23-0831	1860 MEADOW WOODS BLV	$0.00	$75.00	
Mechanical	Mechanical	07/11/2023	PM23-0830	10218 SWAN LAKE CIR	$0.00	$198.00	
Mechanical	Mechanical	07/11/2023	PM23-0833	10226 SWAN LAKE CIR	$0.00	$215.00	
Mechanical	Mechanical	07/11/2023	PM23-0834	10208 SWAN LAKE CIR	$0.00	$215.00	
Mechanical	Mechanical	07/11/2023	PM23-0828	7107 COPPER CREEK CT	$0.00	$148.00	
Mechanical	Mechanical	07/12/2023	PM23-0839	2688 EASTLAWN AVE	$0.00	$155.00	
Mechanical	Mechanical	07/12/2023	PM23-0836	7262 LOCHMOOR DR	$0.00	$105.00	
Mechanical	Mechanical	07/12/2023	PM23-0829	7625 KENTON CT	$0.00	$135.00	
Mechanical	Mechanical	07/13/2023	PM23-0842	7410 RED BIRD DR	$0.00	$135.00	07/27/2023
Mechanical	Mechanical	07/12/2023	PM23-0844	7562 CARLTON DR	$0.00	$75.00	
Mechanical	Mechanical	07/13/2023	PM23-0845	445 E GRAND BLVD	$0.00	$90.00	
Mechanical	Mechanical	07/13/2023	PM23-0847	1420 CANDLEWOOD LN	$0.00	$75.00	
Mechanical	Mechanical	07/05/2023	PM23-0804	2981 INTERNATIONAL DR 20	$0.00	$75.00	
Mechanical	Mechanical	07/03/2023	PM23-0803	6800 APPLE HILL DR	$0.00	$75.00	
Mechanical	Mechanical	07/05/2023	PM23-0808	8762 AMARANTH LN	$0.00	$90.00	
Mechanical	Mechanical	07/01/2023	PM23-0801	2268 WOODALE AVE	$0.00	$75.00	
Mechanical	Mechanical	07/02/2023	PM23-0765	8191 HUMMINGBIRD CT	$0.00	$115.00	
Mechanical	Mechanical	07/03/2023	PM23-0798	214 S CLUBVIEW DR	$0.00	$75.00	
Mechanical	Mechanical	07/03/2023	PM23-0799	3019 ROUNDTREE BLVD B1	$0.00	$75.00	

Mechanical Mechanical	07/03/2023	PM23-0780	8699 SPINNAKER WAY C2	$0.00	$75.00	
Mechanical Mechanical	07/06/2023	PM23-0806	1330 MCCARTHY CT	$0.00	$75.00	
Mechanical Mechanical	07/06/2023	PM23-0807	1824 HEATHERRIDGE ST	$0.00	$75.00	
Mechanical Mechanical	07/06/2023	PM23-0818	2727 APPLERIDGE ST	$0.00	$75.00	
Mechanical Mechanical	07/06/2023	PM23-0817	1065 WOODGLEN AVE	$0.00	$75.00	
Mechanical Mechanical	07/06/2023	PM23-0811	276 CARRIAGE WAY	$0.00	$115.00	
Mechanical Mechanical	07/06/2023	PM23-0809	7418 GREENFIELD ST	$0.00	$141.00	
Mechanical Mechanical	07/06/2023	PM23-0812	8138 STARLING CT	$0.00	$128.00	
Mechanical Mechanical	07/06/2023	PM23-0815	6685 E SUMMERDALE CT	$0.00	$105.00	07/17/2023
Mechanical Mechanical	07/06/2023	PM23-0813	7206 BELLE MEADE CT	$0.00	$75.00	
Mechanical Mechanical	07/06/2023	PM23-0814	618 PINEWOOD ST	$0.00	$75.00	
Mechanical Mechanical	07/10/2023	PM23-0827	7760 TROTTERS PARK ST	$0.00	$178.00	
Mechanical Mechanical	07/10/2023	PM23-0826	276 CARRIAGE WAY	$0.00	$105.00	
Mechanical Mechanical	07/10/2023	PM23-0825	6457 OAKBROOK DR	$0.00	$98.00	
Mechanical Mechanical	07/10/2023	PM23-0710	2667 PEACHCREST ST	$0.00	$145.00	07/25/2023
Mechanical Mechanical	07/10/2023	PM23-0823	601 HAYES ST	$0.00	$75.00	07/24/2023
Mechanical Mechanical	07/10/2023	PM23-0802	5757 TUTTLE HILL RD	$0.00	$75.00	08/02/2023
Mechanical Mechanical	07/10/2023	PM23-0820	2350 RAVINEWOOD AVE	$0.00	$75.00	
Mechanical Mechanical	07/07/2023	PM23-0821	939 MAPLEWOOD AVE	$0.00	$75.00	
Mechanical Mechanical	07/18/2023	PM23-0857	7420 DORAL DR	$0.00	$90.00	08/02/2023
Mechanical Mechanical	07/18/2023	PM23-0732	2352 GEORGE AVE	$0.00	$75.00	
Mechanical Mechanical	07/18/2023	PM23-0864	1285 WATSON ST	$0.00	$340.00	
Mechanical Mechanical	07/18/2023	PM23-0863	5169 MORGAN RD	$0.00	$105.00	
Mechanical Mechanical	07/18/2023	PM23-0746	5 VALLEY DR	$0.00	$75.00	
Mechanical Mechanical	07/18/2023	PM23-0860	1690 DOROTHY ST	$0.00	$115.00	07/21/2023
Mechanical Mechanical	07/18/2023	PM23-0858	6322 JONQUIL LN	$0.00	$145.00	
Mechanical Mechanical	07/19/2023	PM23-0816	1275 S HURON ST (MARRIOT	$0.00	$75.00	
Mechanical Mechanical	07/19/2023	PM23-0837	1948 MIDVALE ST	$0.00	$120.00	
Mechanical Mechanical	07/19/2023	PM23-0859	1098 STUDEBAKER AVE	$0.00	$75.00	
Mechanical Mechanical	07/19/2023	PM23-0805	6231 HICKORY RIDGE CT	$0.00	$75.00	
Mechanical Mechanical	07/18/2023	PM23-0861	377 DAKOTA AVE	$0.00	$155.00	07/31/2023
Mechanical Mechanical	07/18/2023	PM23-0846	1436 LEVONA ST	$0.00	$105.00	07/26/2023
Mechanical Mechanical	07/18/2023	PM23-0855	5020 BOSUNS WAY B2	$0.00	$75.00	
Mechanical Mechanical	07/18/2023	PM23-0848	2907 ROUNDTREE BLVD B2	$0.00	$75.00	

Mechanical	Mechanical	07/18/2023	PM23-0854	5015 BOSUNS WAY B2	$0.00	$75.00	
Mechanical	Mechanical	07/18/2023	PM23-0862	8691 SPINNAKER WAY A2	$0.00	$75.00	
Mechanical	Mechanical	07/24/2023	PM23-0865	3775 GOLFSIDE RD	$0.00	$255.00	
Mechanical	Mechanical	07/26/2023	PM23-0878	927 E FOREST AVE	$0.00	$195.00	
Mechanical	Mechanical	07/26/2023	PM23-0876	1866 PACKARD RD	$0.00	$75.00	
Mechanical	Mechanical	07/26/2023	PM23-0877	2429 ELLSWORTH RD	$0.00	$75.00	
Mechanical	Mechanical	07/25/2023	PM23-0875	851 HAWTHORNE AVE	$0.00	$75.00	
Mechanical	Mechanical	07/21/2023	PM23-0867	804 CLIFFS DR 205 F	$0.00	$105.00	
Mechanical	Mechanical	07/26/2023	PM23-0879	1409 JEFFERY ST	$0.00	$75.00	07/31/2023
Mechanical	Mechanical	07/26/2023	PM23-0882	1365 DELAWARE AVE	$0.00	$75.00	
Mechanical	Mechanical	07/27/2023	PM23-0884	7954 FAIRCREST DR	$0.00	$75.00	
Mechanical	Mechanical	07/27/2023	PM23-0886	6196 SCHUSS XING	$0.00	$75.00	
Mechanical	Mechanical	07/27/2023	PM23-0880	2580 WOODRUFF LN	$0.00	$115.00	
Mechanical	Mechanical	07/27/2023	PM23-0881	1720 SMITH ST	$0.00	$105.00	
Mechanical	Mechanical	07/28/2023	PM23-0874	8064 THORNHILL DR	$0.00	$75.00	
Mechanical	Mechanical	07/28/2023	PM23-0871	1014 LORI ST	$0.00	$75.00	
Mechanical	Mechanical	07/31/2023	PM23-0888	9493 LAKESIDE DR	$0.00	$75.00	
Mechanical	Mechanical	07/28/2023	PM23-0868	800 CLIFFS DR 207F	$0.00	$105.00	
Mechanical	Mechanical	07/28/2023	PM23-0824	9629 BAYVIEW DR 205	$0.00	$105.00	
Plumbing	Plumbing	07/28/2023	PP23-0278	8691 TRILLIUM DR	$0.00	$75.00	
Plumbing	Plumbing	07/27/2023	PP23-0274	1286 ANNA J STEPP	$0.00	$323.00	
Plumbing	Plumbing	07/27/2023	PP23-0276	2170 PACKARD RD	$0.00	$435.00	
Plumbing	Plumbing	07/25/2023	PP23-0275	7387 LOCHMOOR DR	$0.00	$75.00	
Plumbing	Plumbing	07/21/2023	PP23-0272	8239 S HURON RIVER DR	$0.00	$75.00	
Plumbing	Plumbing	07/18/2023	PP23-0267	3775 GOLFSIDE RD	$0.00	$479.00	
Plumbing	Plumbing	07/07/2023	PP23-0263	2755 APPLERIDGE ST	$0.00	$75.00	
Plumbing	Plumbing	07/07/2023	PP23-0262	7327 BELLE MEADE ST	$0.00	$75.00	
Plumbing	Plumbing	07/06/2023	PP23-0258	7150 WARWICK DR	$0.00	$75.00	
Plumbing	Plumbing	07/06/2023	PP23-0259	7230 GREENFIELD ST	$0.00	$75.00	07/28/2023
Plumbing	Plumbing	07/06/2023	PP23-0246	7662 PAINT CREEK DR	$0.00	$125.00	07/14/2023
Plumbing	Plumbing	07/06/2023	PP23-0229	611 LYNNE AVE	$0.00	$75.00	07/10/2023
Plumbing	Plumbing	07/06/2023	PP23-0257	222 S FORD BLVD	$0.00	$75.00	07/11/2023
Plumbing	Plumbing	07/06/2023	PP23-0260	9425 MAPLELAWN CT	$0.00	$90.00	
Plumbing	Plumbing	07/12/2023	PP23-0265	9161 FAWN DR	$0.00	$237.00	

Plumbing	Plumbing	07/14/2023	PP23-0153	2985 MONTROSE	$0.00	$75.00	07/28/2023
Plumbing	Plumbing	07/17/2023	PP23-0268	1055 EVELYN AVE	$0.00	$75.00	08/04/2023
Plumbing	Plumbing	07/14/2023	PP23-0266	1274 N PROSPECT RD	$0.00	$75.00	
Plumbing-W	Plumbing	07/17/2023	PP23-0269	436 HAYES ST	$0.00	$75.00	08/02/2023
Plumbing-W	Plumbing	07/12/2023	PP23-0264	725 NASH AVE	$0.00	$75.00	07/14/2023
Plumbing-W	Plumbing	07/03/2023	PP23-0255	2001 CHEVROLET AVE	$0.00	$75.00	
Plumbing-W	Plumbing	07/05/2023	PP23-0256	1120 BUICK AVE	$0.00	$75.00	
Plumbing-W	Plumbing	07/18/2023	PP23-0270	445 E GRAND BLVD	$0.00	$75.00	07/21/2023
Plumbing-W	Plumbing	07/24/2023	PP23-0273	6981 HITCHINGHAM RD	$0.00	$90.00	
Plumbing-W	Plumbing	07/20/2023	PP23-0271	334 OREGON ST	$0.00	$75.00	07/26/2023
Res - Deck	Res Deck	07/25/2023	PB23-0512	6889 POPLAR DR	$10,000.00	$170.00	
Res - Deck	Res Deck	07/18/2023	PB23-0667	6801 MERRITT RD	$4,000.00	$125.00	
Res - Deck	Res Deck	07/17/2023	PB23-0648	6609 WING ST	$18,000.00	$250.00	07/31/2023
Res - Deck	Res Deck	07/27/2023	PB23-0504	1286 WARNER ST	$16,500.00	$255.00	
Res - Deck	Res Deck	07/05/2023	PB23-0607	6922 POPLAR DR	$47,824.00	$550.00	
Res - Deck	Res Deck	07/10/2023	PB23-0630	6607 MAPLELAWN DR	$7,200.00	$165.00	
Res - Deck	Res Deck	07/10/2023	PB23-0599	2333 DRAPER AVE	$11,700.00	$205.00	
Res - Deck	Res Deck	07/11/2023	PB23-0583	8349 THORNHILL DR	$11,500.00	$190.00	
Res - Deck	Res Deck	07/13/2023	PB23-0649	8745 TRILLIUM DR	$6,622.00	$140.00	
Res - Deck	Res Deck	07/17/2023	PB23-0647	7975 BERWICK DR	$12,815.00	$215.00	07/27/2023
Res - Deck	Res Deck	07/13/2023	PB23-0645	7977 FAIRCREST DR	$12,500.00	$215.00	
Res - Egress	Res - Egress Window	07/06/2023	PB23-0500	7525 WARWICK DR	$1,000.00	$100.00	
Res - Egress	Res - Egress Window	07/07/2023	PB23-0562	1060 E FOREST AVE	$3,000.00	$100.00	
Res - Egress	Res - Egress Window	07/06/2023	PB23-0567	6306 MAPLEHURST DR	$4,600.00	$110.00	07/26/2023
Res - Egress	Res - Egress Window	07/25/2023	PB23-0675	2290 VALLEY DR	$5,200.00	$145.00	
Res - Mobil	Res - Mobile Home	07/18/2023	PB23-0432	9905 JOAN CIR 157	$5,000.00	$170.00	
Res - Roof	Res - Roof	07/17/2023	PB23-0665	2439 MCKINLEY AVE	$8,552.00	$135.00	
Res - Roof	Res - Roof	07/18/2023	PB23-0676	1361 GATTEGNO ST	$12,375.00	$190.00	
Res - Roof	Res - Roof	07/25/2023	PB23-0554	1093 DESOTO AVE	$6,600.00	$115.00	07/27/2023
Res - Roof	Res - Roof	07/24/2023	PB23-0110	222 KIRK AVE	$7,668.00	$125.00	07/26/2023
Res - Roof	Res - Roof	07/19/2023	PB23-0671	1476 FOLEY AVE	$15,269.00	$205.00	
Res - Roof	Res - Roof	07/19/2023	PB23-0669	5200 MERRITT RD	$2,500.00	$75.00	07/20/2023
Res - Roof	Res - Roof	07/27/2023	PB23-0699	875 HAWTHORNE AVE	$3,790.00	$85.00	
Res - Roof	Res - Roof	07/27/2023	PB23-0700	1210 ELLIS RD	$14,475.00	$195.00	

Res - Roof	Res - Roof	07/27/2023	PB23-0703	641 HAYES ST	$11,964.00	$165.00	
Res - Roof	Res - Roof	07/27/2023	PB23-0701	315 CARRIAGE WAY	$15,991.00	$205.00	
Res - Roof	Res - Roof	07/27/2023	PB23-0698	5529 PINEVIEW DR	$41,260.00	$465.00	
Res - Roof	Res - Roof	07/28/2023	PB23-0710	7144 ST ANDREWS DR	$11,300.00	$165.00	
Res - Roof	Res - Roof	07/28/2023	PB23-0709	8837 PRAIRIE ST	$15,000.00	$195.00	
Res - Roof	Res - Roof	07/25/2023	PB23-0690	7381 MERIDIAN DR	$20,000.00	$245.00	
Res - Roof	Res - Roof	07/06/2023	PB23-0628	1344 DELAWARE AVE	$11,762.00	$165.00	
Res - Roof	Res - Roof	07/05/2023	PB23-0624	1023 LEVONA ST	$11,700.00	$165.00	
Res - Roof	Res - Roof	07/03/2023	PB23-0626	1984 MARY CATHERINE ST	$9,660.00	$145.00	07/13/2023
Res - Roof	Res - Roof	07/07/2023	PB23-0634	1227 SWEET RD	$22,557.00	$275.00	
Res - Roof	Res - Roof	07/10/2023	PB23-0636	8037 REFLECTION CT	$18,658.00	$250.00	07/27/2023
Res - Roof	Res - Roof	07/10/2023	PB23-0639	326 CARRIAGE WAY	$15,550.00	$205.00	
Res - Roof	Res - Roof	07/17/2023	PB23-0609	1707 KNOWLES ST	$10,980.00	$155.00	
Res - Roof	Res - Roof	07/17/2023	PB23-0618	649 DESOTO AVE	$10,634.00	$155.00	
Res - Roof	Res - Roof	07/13/2023	PB23-0658	1381 GATTEGNO ST	$9,000.00	$135.00	
Res - Roof	Res - Roof	07/13/2023	PB23-0657	1371 GATTEGNO ST	$13,200.00	$185.00	
Res - Roof	Res - Roof	07/13/2023	PB23-0659	8770 LILLY DR	$11,000.00	$155.00	
Res - Roof	Res - Roof	07/13/2023	PB23-0656	6344 OAKBROOK DR	$13,961.00	$185.00	07/20/2023
Res - Roof	Res - Roof	07/12/2023	PB23-0641	1208 LESTER AVE	$10,172.00	$155.00	
Res - Roof	Res - Roof	07/12/2023	PB23-0642	474 EASTMAN AVE	$8,670.00	$135.00	07/24/2023
Res - Siding	Res - Siding	07/25/2023	PB23-0689	1291 DAVIS ST	$32,025.00	$375.00	
Res - Siding	Res - Siding	07/18/2023	PB23-0673	2383 PONDEROSA CT	$24,000.00	$285.00	
Res - Windc	Res - Windows	07/19/2023	PB23-0668	2808 ROUNDTREE BLVD	$4,300.00	$95.00	
Res - Windc	Res - Windows	07/19/2023	PB23-0664	1754 SMITH ST	$6,000.00	$105.00	
Res - Windc	Res - Windows	07/19/2023	PB23-0644	7058 HOGAN DR	$7,403.00	$125.00	
Res - Windc	Res - Windows	07/19/2023	PB23-0680	2151 BRADLEY AVE	$26,987.00	$315.00	
Res - Windc	Res - Windows	07/19/2023	PB23-0670	1124 SHIRLEY DR	$6,339.00	$115.00	
Res - Windc	Res - Windows	07/20/2023	PB23-0604	7995 SPRINGWATER DR	$13,500.00	$200.00	
Res - Windc	Res - Windows	07/20/2023	PB23-0449	7678 GREENE FARM DR	$8,000.00	$125.00	
Res - Windc	Res - Windows	07/20/2023	PB23-0600	6326 SEQUOIA DR	$10,989.00	$155.00	
Res - Windc	Res - Windows	07/28/2023	PB23-0684	10810 TEXTILE RD	$7,800.00	$125.00	
Res - Windc	Res - Windows	07/28/2023	PB23-0692	7454 SPY GLASS LN	$8,649.00	$135.00	
Res - Windc	Res - Windows	07/28/2023	PB23-0691	2285 MCKINLEY AVE	$3,990.00	$85.00	
Res - Windc	Res - Windows	07/26/2023	PB23-0268	7463 WILLOW CREEK DR	$23,590.00	$285.00	08/02/2023

Res - Windc	Res - Windows	07/30/2023	PB23-0708	8274 HUMMINGBIRD DR	$83,146.00	$885.00	
Res - Windc	Res - Windows	07/12/2023	PB23-0643	7881 TROTTERS PARK ST	$17,644.00	$225.00	
Res - Windc	Res - Windows	07/14/2023	PB23-0662	8076 CREEK BEND DR	$1,900.00	$75.00	
Res - Windc	Res - Windows	07/14/2023	PB23-0660	1233 HULL AVE	$1,079.00	$75.00	
Res - Windc	Res - Windows	07/07/2023	PB23-0622	2772 APPLERIDGE ST	$16,904.00	$215.00	
Res - Windc	Res - Windows	07/06/2023	PB23-0627	9361 S HURON RIVER DR	$6,895.00	$115.00	
Res - Windc	Res - Windows	07/06/2023	PB23-0603	24 HILLCREST BLVD	$8,172.00	$135.00	
Soil Erosion	Soil Erosion Residential	07/06/2023	PSE23-0009	8303 S HURON RIVER DR	$0.00	$100.00	
Soil Erosion	Soil Erosion Residential	07/06/2023	PSE23-0008	9335 S HURON RIVER DR	$0.00	$100.00	
Soil Erosion	Soil Erosion Residential	07/06/2023	PSE23-0007	9361 S HURON RIVER DR	$0.00	$100.00	
Zoning	Zoning - Fence	07/06/2023	PZP23-0078	7848 BAY TREE DR	$0.00	$50.00	
Zoning	Zoning - Shed	07/03/2023	PZP23-0074	7008 AMBERLY WAY	$0.00	$50.00	07/13/2023
Zoning	Zoning - Shed	07/03/2023	PZP23-0075	670 WHARTON ST	$0.00	$50.00	
Zoning	Zoning - Fence	07/17/2023	PZP23-0083	7975 BERWICK DR	$9,137.00	$50.00	
Zoning	Zoning - Fence	07/12/2023	PZP23-0077	1396 CRESTWOOD AVE	$0.00	$50.00	
Zoning	Zoning - Fence	07/12/2023	PZP23-0082	266 S WALLACE BLVD	$0.00	$50.00	
Zoning	Zoning - Fence	07/11/2023	PZP23-0081	8164 LAKE CREST DR	$0.00	$50.00	
Zoning	Zoning - Fence	07/11/2023	PZP23-0079	7401 GREENFIELD ST	$0.00	$50.00	
Zoning	Zoning - Fence	07/11/2023	PZP23-0080	6135 BOYNE DR	$0.00	$50.00	
Zoning	Zoning - Driveway	07/31/2023	PZP23-0095	1106 COLEMAN ST	$0.00	$50.00	
Zoning	Zoning - Multiple	07/31/2023	PZP23-0096	5540 GRAYFIELD CIR	$0.00	$50.00	
Zoning	Zoning - Fence	07/27/2023	PZP23-0091	2090 S CONGRESS ST	$0.00	$50.00	
Zoning	Zoning - Fence	07/27/2023	PZP23-0087	9639 HEREFORD DR	$0.00	$50.00	
Zoning	Zoning - Fence	07/20/2023	PZP23-0085	6261 MAPLEHURST DR	$0.00	$50.00	
Zoning	Zoning - Fence	07/25/2023	PZP23-0090	830 JUNEAU RD	$0.00	$50.00	
Zoning	Zoning - Fence	07/25/2023	PZP23-0036	621 WHARTON ST	$0.00	$50.00	
Zoning	Zoning - Multiple	07/25/2023	PZP23-0088	6858 PLAINVIEW ST	$0.00	$50.00	
Zoning	Zoning - Driveway	07/19/2023	PZP23-0086	2492 WHITTIER RD	$0.00	$50.00	
					$1,860,054.00	**$42,822.00**	

Building Certificates of Occupancy Issued - July 2023

C O Number	Address Display String	Status	Date Temp Issued	Date Finaled
OF23-0032	6719 CROSSOVER LN	ISSUED (FINAL)		07/12/2023
OF23-0033	6731 CROSSOVER LN	ISSUED (FINAL)		07/12/2023
OF23-0034	6743 CROSSOVER LN	ISSUED (FINAL)		07/12/2023
OF23-0035	3375 E MICHIGAN 222	ISSUED (FINAL)		07/21/2023
OF23-0036	3375 E MICHIGAN 005	ISSUED (FINAL)		07/14/2023
OF23-0037	1100 SHARE AVE	ISSUED (FINAL)		07/17/2023
OF23-0038	7711 TUTTLE HILL RD	ISSUED (FINAL)		07/19/2023
OF23-0039	6520 WHITTAKER RD	ISSUED (FINAL)		07/20/2023

Township Supervisor
Brenda L. Stumbo
Township Clerk
Heather Jarrell Roe
Township Treasurer
Stan Eldridge

YPSILANTI TOWNSHIP
— PLANNING & ZONING DEPARTMENT —

Trustees
John Newman II
Gloria Peterson
Debbie Swanson
Ryan Hunter

August 2, 2023

Re: Planning Division (OCS) July 2023 Activity Summary

Please be advised of the following activities related to the Planning Department for July 2023.

Zoning verification letters issued:	2
Building and zoning permit applications reviewed:	68
Business registration applications reviewed:	0

Planning Commission: At the July 25, 2023, Planning Commission Meeting, the following items were considered:

A. **ZONING ORDINANCE TEXT AMENDMENT –** TO CONSIDER THE PROPOSED CHANGES TO THE FOLLOWING ZONING ORDINANCES:
   1) ARTICLE 4, SECTION 407. – RESIDENTIAL MULTIPLE-FAMILY: LOW DENSITY
   2) ARTICLE 4, SECTION 408. – RESIDENTIAL MULTIPLE-FAMILY: MEDIUM DENSITY
   3) ARTICLE 4, SECTION 409. – RESIDENTIAL MULTIPLE-FAMILY: HIGH DESNITY
   4) ARTCILE 5, SECTION 506. – TOWN CENTER
   5) ARTICLE 10, SECTION 1005. – EFFECTIVENESS
   6) ARTICLE 11, SECTION 1128. – TEMPORARY SIDEWALK, OUTDOOR AND TENT SALES FOR PRINCIPAL USE.
   7) ARTICLE 13, SECTION 1305. – FENCES AND WALLS
   8) ARTICLE 15, SECTION 1509. – SIGNS

MOTION: Mr. Tawakkul **MOVED** to recommend the zoning ordinance text amendments go before the Township Board of Trustees for two required readings with the following considerations:

- Research and development, including laboratories, prototype development and testing facilities, design and pilot or experimental product development should be permitted in all industrial zoning districts.
- Railroad lines, rail spurs and similar rail transport access facilities should be permitted in all industrial zoning districts.

- Transfer and electricity and gas service buildings and yards should be permitted in all industrial zoning districts.

The **MOTION** was **SECONDED** by Mr. Doe.

Roll Call Vote: Mr. Tawakkul (Yes), Mr. Doe (Yes), Mr. Sinkule (Yes), Ms. Peterson (Yes), Mr. Copeland (Yes).

MOTION PASSED.

Zoning Board of Appeals: At the July 12, 2023, Zoning Board of Appeals Meeting, the following items were considered:

Applicant:	Tapan Patel – Wolverine Eagle Hospitality.
Location:	800 S. Hewitt Road, Ypsilanti, MI 48197
Parcel ID:	K-11-18-100-022
Request:	Article 5 – Sec. 503. Standards: Request for variance to the building height requirements. Article 5 – Sec. 507. Design Standards: Request for variance to building transparency requirements.

MOTION: Mr. Marshall MOVED to approve the variance request of Mr. Tapan Patel representing Wolverine Eagle Hospitality, to permit the transparency of the western façade to be the 11% of the required 30% percent per Ordinance upon the property located at 800 s Hewitt, parcel K-11-18-100-022 as the following practical difficulties have been noted:

- The authorizing of the requested variance will not be a substantial detriment to adjacent property and will not materially impair the purposes of this ordinance or the public interest, and;
- It has been determined and agreed that the subject parcel has exceptional conditions requiring the additional building height.

The motion is further made with the following conditions:

- The applicant shall obtain Final Site Plan and Detailed Engineering Approval; and shall obtain all outside agency permits for the construction of the hotel.

The MOTION was SECONDED by Mr. Hine.

Roll Call Vote: Mr. Marshall (Yes), Mr. Hine (Yes), Ms. El-Assadi (Yes).

MOTION PASSED.

MOTION: Mr. Marshall **MOVED** TO approve the variance request of Mr. Patel representing Wolverine Eagle Hospitality, to permit an increase in the overall height of the proposed building located within the RC, Regional Corridor, Site Type C district from

3 stories or 38-feet to 4 stories or 53-feet to permit the construction of a 59,009 square-foot, 100 room hotel upon the property located at 800 S. Hewitt, Parcel K-11-18-100-022 as the following practical difficulties have been noted:

- The authorizing of the requested variance will not be a substantial detriment to adjacent property and will not materially impair the purposes of this ordinance or the public interest, and;
- It has been determined and agreed that the subject parcel has exceptional conditions requiring the additional building height.

The motion is further made with the following conditions:

- The applicant shall obtain Final Site Plan and Detailed Engineering Approval; and shall obtain all outside agency permits for the construction of the hotel.

The **MOTION** was **SECONDED** by Mr. Hine.

Roll Call Vote: Mr. Marshall (Yes), Mr. Hine (Yes), Ms. El-Assadi (Yes).

MOTION PASSED.

Applicant:	The Lamkin Group, LLC.
Location:	1155 E. Forest Avenue, Ypsilanti, MI 48198
Parcel ID:	K-11-03-400-033
Request:	Article 4 – Sec. 407.3 Dimensional Requirements: Request for variance to the building setback requirements.

MOTION: Mr. Hine **MOVED** to table to the variance request at 1155 E Forest Ave to the setback requirements of Section 407 of the township zoning ordinance for construction of a new apartment office building to consider comments presented during this public hearing.

The **MOTION** was **SECONDED** by Mr. Marshall.

Roll Call Vote: Mr. Hine (Yes), Mr. Marshall (Yes), Ms. El-Assadi (Yes).

ITEM TABLED.

Charter Township of Ypsilanti

7200 S. HURON RIVER DRIVE•YPSILANTI, MI 48197

SUPERVISOR BRENDA STUMBO • CLERK HEATHER JARRELL ROE • TREASURER STAN ELDRIDGE TRUSTEES: RYAN HUNTER • JOHN P. NEWMAN II • GLORIA PETERSON • DEBBIE SWANSON

WORK SESSION AGENDA
CHARTER TOWNSHIP OF YPSILANTI
TUESDAY, AUGUST 15, 2023

5:00pm

1. AGENDA REVIEW ……..SUPERVISOR STUMBO
2. OTHER DISCUSSION…… BOARD MEMBERS

REVIEW AGENDA

A. SUPERVISOR STUMBO WILL REVIEW BOARD MEETING AGENDA

OTHER DISCUSSION

A. BOARD MEMBERS HAVE THE OPPORTUNITY TO DISCUSS ANY OTHER PERTINENT ISSUES

Charter Township of Ypsilanti

7200 S. HURON RIVER DRIVE•YPSILANTI, MI 48197

SUPERVISOR BRENDA STUMBO • CLERK HEATHER JARRELL ROE • TREASURER STAN ELDRIDGE TRUSTEES: RYAN HUNTER • JOHN P. NEWMAN II • GLORIA PETERSON • DEBBIE SWANSON

YPSILANTI TOWNSHIP
— WHERE YOUR FUTURE GROWS —

REGULAR MEETING AGENDA

TUESDAY, AUGUST 15, 2023
7:00 P.M.

1. CALL TO ORDER

2. PLEDGE OF ALLEGIANCE AND INVOCATION

3. PUBLIC COMMENTS

   - THREE MINUTES PER PERSON
   - ALL COMMENTS MUST BE ADDRESSED TO THE CHAIR
   - PUBLIC COMMENTS ARE ALSO WELCOME AS THE BOARD ADDRESSES EACH AGENDA ITEM

4. CONSENT AGENDA

   A. MINUTES OF THE JULY 18, 2023 WORK SESSION AND REGULAR MEETING

   B. STATEMENTS AND CHECKS

      1. STATEMENTS AND CHECKS FOR AUGUST 1, 2023 IN THE AMOUNT OF $2,107,420.27
      2. STATEMENTS AND CHECKS FOR AUGUST 15, 2023 IN THE AMOUNT OF $1,894,618.94
      3. CLARITY HEALTHCARE DEDUCTIBLE ACH FOR JULY 2023 IN THE AMOUNT OF $35,820.48
      4. CLARITY HEALTHCARE ADMIN FEE FOR JULY 2023 IN THE AMOUNT OF $1,443.28

   C. TREASURER'S REPORT JULY 2023

5. ATTORNEY REPORT

   A. GENERAL LEGAL UPDATE

OLD BUSINESS

1. 1ST READING OF PROPOSED ORDINANCE 2023-503, AN ORDINANCE TO AMEND CHAPTER 62, ARTICLE IV, SECTION 62-77 OF THE CODE OF ORDINANCES, CHARTER TOWNSHIP OF YPSILANTI, TO ADJUST SEWER RATES
   (FIRST READING HELD AT THE JULY 18, 2023 REGULAR MEETING)

2. 1ST READING OF PROPOSED ORDINANCE 2023-504, AN ORDINANCE TO AMEND CHAPTER 62, ARTICLE IV, SECTION 62-76 (a)(1) OF THE CODE OF ORDINANCES, CHARTER TOWNSHIP OF YPSILANTI, TO ADJUST WATER SERVICE RATES
   (FIRST READING HELD AT THE JULY 18, 2023 REGULAR MEETING)

NEW BUSINESS

1. 1ST READING OF RESOLUTION 2023-12, PROPOSED ORDINANCE 2023-505, AN ORDINANCE TO AMEND ARTICLES 4, 5, 11, 13 AND 15 OF THE YPSILANTI TOWNSHIP ZONING ORDINANCE

2. RESOLUTION 2023-10, RESOLUTION REQUESTING THE WASHTENAW COUNTY BOARD OF COMMISSIONERS (WCBOC) TO IMMEDIATELY STRIKE FROM THE CONTRACT AWARDED TO THE SUPREME FELONS INC. ON JANUARY 19, 2023 CONTRACT NUMBER BEING 54519 WHICH WAS SIGNED AND RECORDED WITH THE WASHTENAW COUNTY CLERK'S OFFICE AND PROVISION CONTAINED IN PARAGRAPH 5(3) THAT AUTHORIZES AND SANCTIONS THE SUPREME FELONS INC. TO "ESTABLISH A REGULAR DISPATCH AND PATROL SYSTEM FOR FOUR NEIGHBORHOODS IN ZIP CODES 48197 AND 48198," TWO OF WHICH WERE SUBSEQUENTLY IDENTIFIED BY THE WASHTENAW COUNTY ADMINISTRATOR IN AN EMAIL DATED MAY 3, 2023 AS TARGETING THE APPLERIDGE AND SUGARBROOK SUBDIVISIONS

3. REQUEST TO APPROVE L-4029 2023 TAX RATE

4. REQUEST TO FILL THE MUNICIPAL SERVICES DIRECTOR POSITION WITH INTERNAL CANDIDATE JOHN HINES, WITH A STARTING SALARY OF $90,000.00 ANNUALLY

5. REQUEST TO APPROVE AN AGREEMENT WITH ERNAT CONSULTING TO ASSIST THE CHARTER TOWNSHIP OF YPSILANTI'S POLICE STEERING COMMITTEE IN DEVELOPING A REQUEST FOR PROPOSAL IN A NOT TO EXCEED AMOUNT OF $2,500.00 BUDGETED IN LINE ITEM #101-272-801-000 CONTINGENT UPON APPROVAL OF THE AGREEMENT BY THE TOWNSHIP ATTORNEY

6. RESOLUTION 2023-11, APPLICATION FOR LAYING OUT AND DESIGNATING A DRAINAGE DISTRICT

7. REQUEST TO APPROVE THE QUOTE FROM SINGLE SOURCE PROVIDER IMAGE TREND FOR INCIDENT REPORTING SOFTWARE FOR THE FIRE DEPARTMENT IN THE AMOUNT OF $18,803.00 BUDGETED IN LINE ITEM #206-901-980-001 CONTINGENT UPON ATTORNEY APPROVAL OF THE AGREEMENT

8. REQUEST TO APPROVE THE SECOND AGREEMENT WITH THE WASHTENAW COUNTY ROAD COMMISSION FOR STREET SWEEPING IN THE AMOUNT OF $17,113.74 BUDGETED IN LINE ITEM #213-446-982-006

9. REQUEST TO APPROVE THE AGREEMENT WITH STANTEC CONSULTING TO PROVIDE PROFESSIONAL SERVICES RELATED TO THE DESIGN, BID PROCESS AND PROJECT ADMINISTRATION FOR THE YPSILANTI TOWNSHIP COMMUNITY CENTER WATER DAMAGE RENOVATION IN A NOT TO EXCEED AMOUNT OF $47,500.00 BUDGETED IN LINE ITEM #213-901-976-008

10. REQUEST TO APPROVE THE AGREEMENT WITH STANTEC CONSULTING TO PROVIDE PROFESSIONAL SERVICES FOR THE DESIGN, BID PROCESS AND PROJECT ADMINISTRATION FOR THE YPSILANTI TOWNSHIP COMMUNITY CENTER BATHROOMS IN A NOT TO EXCEED AMOUNT OF $98,700.00 BUDGETED IN LINE ITEM #282-901-981-040

11. REQUEST TO APPROVE THE AGREEMENT WITH STANTEC CONSULTING TO PROVIDE PROFESSIONAL SERVICES FOR THE DESIGN, BID PROCESS AND PROJECT ADMINISTRATION FOR THE YPSILANTI TOWNSHIP GREEN OAKS GOLF COURSE BATHROOM IN A NOT TO EXCEED AMOUNT OF $58,300.00 BUDGETED IN LINE ITEM #282-901-981-100

12. REQUEST TO SET A PUBLIC HEARING DATE OF TUESDAY, SEPTEMBER 19, 2023 AT APPROXIMATELY 7:00PM – 2023 SPECIAL ASSESSMENT LEVY

13. BUDGET AMENDMENT #11

AUTHORIZATIONS AND BIDS

1. REQUEST TO AWARD THE QUOTE FOR FLOORING INSTALLATION AT 1405 HOLMES RD TO ANN ARBOR CARPETS INC. IN THE AMOUNT OF $12,408.06 BUDGETED IN LINE ITEM #266-303-975-135

2. REQUEST TO SEEK BIDS FOR THE YPSILANTI TOWNSHIP HELPFUL HANDBOOK AND RECREATION GUIDE

3. REQUEST APPROVAL TO SEEK SEALED BIDS FOR PARK ENTRANCE SIGNAGE DESIGN AND INSTALLATION

4. REQUEST TO SEEK SEALED BIDS FOR THE RENOVATION OF CLUBVIEW PARK TENNIS COURTS AS PART OF THE mDNR LAND AND WATER CONSERVATION FUND DEVELOPMENT PROJECT AGREEMENT

5. REQUEST TO SEEK SEALED BIDS FOR THE RENOVATION OF COMMUNITY CENTER PARK TENNIS COURTS AS PART OF THE mDNR LAND AND WATER CONSERVATION FUND DEVELOPMENT PROJECT AGREEMENT

6. REQUEST TO SEEK SEALED BIDS FOR THE REPAIRS OF FORD LAKE PARK SHELTERS 1-4 AND WEST WILLOW PARK SHELTER AS PART OF THE AMERICAN RESCUE PLAN ACT (ARPA) PROJECT FUNDING

7. REQUEST TO SEEK SEALED BIDS FOR THE RIDGE RD. SIDEWALK PROJECT

OTHER BUSINESS

BOARD MEMBER UPDATES

PUBLIC COMMENTS

CONSENT AGENDA

CHARTER TOWNSHIP OF YPSILANTI
MINUTES OF THE JULY 18, 2023 WORK SESSION

Supervisor Stumbo called the meeting to order at approximately 5:00pm in the Ypsilanti Township Civic Center Board Room, 7200 S. Huron River Drive, Ypsilanti Township.

Members Present: Supervisor Brenda Stumbo (arrived 5:20pm),
Clerk Heather Jarrell Roe and Treasurer Stan Eldridge
Trustees: Ryan Hunter, John Newman II, Gloria Peterson
and Debbie Swanson

Members Absent: None

Legal Counsel: Wm. Douglas Winters

AGENDA

1. POLICE SERVICES COMMITTEE…….... TRUSTEE NEWMAN

Trustee Newman reviewed a letter received by the township from Sheriff Clayton regarding funding and budgeting for police services. He stated this letter states that the township will no longer receive a subsidy from the county for police services. Trustee Newman added that the committee has been requesting financial information from the sheriff's office since February.

Trustee Newman stated that the Police Services Committee has been examining alternatives and would like to engage with a consultant to determine if the township having its own police department is a viable option.

Treasurer Eldridge stated that the possibility of looking elsewhere for police services is in no way reflective of the job being done daily by our current deputies. Treasurer Eldridge added that he has contacted other municipalities with their own police department and those costs were substantially lower than what the township is paying for.

Trustee Hunter thanked Trustee Newman for his work and Treasurer Eldridge for providing so much context and history. He added that the township needed to go with the option that provides the most value to our community.

Trustee Swanson thanked the committee for their and shared her disappointment that the township has not been able to secure information from the sheriff for an analysis. She added that she would like some kind of public announcement about the Police Services Committee and the work that is being done to research costs.

Trustee Newman stated the next step would be for the board to approve a request for a proposal for a consultant.

Clerk Jarrell Roe stated that any item between $10,000 and $15,000 did not need board approval but approval from two full time officials.

Attorney Winters stated that an RFP would need to be drafted that defined what tasks the consultants are being asked to perform.

Supervisor Stumbo reviewed the amount of funding that municipalities in Washtenaw County who have their own police departments are receiving.

Supervisor Stumbo stated that it is unheard of in this day and time for a department to not be held accountable for the taxes that people pay.

2. AGENDA REVIEW……SUPERVISOR STUMBO

1. 1st READING OF PROPOSED ORDINANCE 2023-503, AN ORDINANCE TO AMEND CHAPTER 62, ARTICLE IV, SECTION 62-67 OF THE CODE OF ORDINANCES CHARTER TOWNSHIP OF YPSILANTI, TO ADJUST SEWER RATES

Clerk Jarrell Roe stated that per the ordinance YCUA could raise the water rate by up to 4% without board approval so this ordinance is to allow Municode to be updated with the new rates.

Luke Blackburn, YCUA Director, gave a review of YCUA's budget and for the upcoming year.

2. 1st READING OF PROPOSED ORDINANCE 2023-504, AN ORDINANCE TO AMEND CHAPTER 62, ARTICLE IV, SECTION 62-76 (a)(1) OF THE CODE OF ORDINANCES CHARTER TOWNSHIP OF YPSILANTI, TO ADJUST WATER SERVICE RATES

3. REQUEST APPROVAL FOR CHANGE ORDER #1 FOR THE PURCHASE OF THREE FORD F-150 SNOW PLOW TRUCKS FROM FELDMAN AUTOMOTIVE IN THE AMOUNT OF $8,100.00 BUDGETED IN LINE ITEM #661-268-985-000

John Hines, Recreation Director, stated this change order is due to the addition of the dual battery option for each truck.

4. REQUEST TO CONFIRM AUTHORIZATION FOR CIRCUIT COURT LITIGATION TO ABATE A PUBLIC NUISANCE LOCATED AT 580 KANSAS AVE. BUDGETED IN LINE ITEM #101-729-801-023

Attorney Winters gave an overview of this property.

5. REQUEST TO APPROVE THE RECOMMENDATION OF THE YPSILANTI TOWNSHIP ASSESSMENT DEPARTMENT THAT YPSILANTI TOWNSHIP CONSENT TO THE REVISION TO THE PLAT FOR PATTEE'S ADDITION TO YPSILANTI

Clerk Jarrell Roe stated that when an alley or alleyway is abandoned the adjacent property owners are entitled to add that property to their property description.

Attorney Winters requested that approval for the supervisor and clerk to sign the consent be added to the motion.

6. BUDGET AMENDMENT #10

Supervisor Stumbo reviewed the budget amendment and stated that a grant had been received from Destination Ann Arbor.

AUTHORIZATIONS AND BIDS

1. REQUEST TO SEEK SEALED BIDS FOR FENCE REPLACEMENT AT THE HEWITT RD. FIRE STATION

Supervisor Stumbo stated this would come back to the board.

2. REQUEST TO AWARD THE BID FOR THE PURCHASE OF ONE (1) 2024 12+2 WHEELCHAIR PASSENGER BUS TO TESCO IN THE AMOUNT OF $119,072.00 BUDGETED IN LINE ITEM #282-901-981-045

Supervisor Stumbo stated both buses are being purchased with ARPA funds.

John Hines, Recreation Director, reviewed the purchase of each bus.

3. **REQUEST TO AWARD THE BID FOR THE PURCHASE OF ONE (1) 2024 15 PASSENGER BUS TO HOLLAND BUS COMPANY IN THE AMOUNT OF $84,797.00 BUDGETED IN LINE ITEM #282-901-981-045**

3. OTHER DISCUSSION…….. BOARD MEMBERS

The Work Session meeting was adjourned at approximately 6:21pm.

Respectfully Submitted,

Heather Jarrell Roe, Clerk, Charter Township of Ypsilanti

CHARTER TOWNSHIP OF YPSILANTI
MINUTES OF THE JULY 18, 2023 REGULAR BOARD MEETING

Supervisor Brenda Stumbo called the meeting to order at approximately 7:06pm in the Ypsilanti Township Civic Center Board Room, 7200 S. Huron River Drive, Ypsilanti Township. The Pledge of Allegiance was recited followed by a moment of silent prayer.

Members Present: Supervisor Brenda Stumbo, Clerk Heather Jarrell Roe and Treasurer Stan Eldridge
Trustees: Ryan Hunter, John Newman II, Gloria Peterson and Debbie Swanson

Members Absent: None

Legal Counsel: Wm. Douglas Winters

3. PUBLIC COMMENTS

Eight public comments were given. The concerns raised were as follows: waste management and lack of township communication, concerns for shootings and lack of police presence, a traffic incident, people smoking marijuana in public, parties in the roadway, the lack of police response to calls for concern, public drinking and intoxication, loitering, gun shots fired into local homes, police incident numbers being the same, parties being held in parks, residents not having quality of life in Ypsilanti Township and concerns stated that the township wants a trouble area, not being able to walk in the neighborhood due to lack of safety, lack of police follow up when called, police intimidation towards residents when called and their lack of training, trash and blight in the roadway, no curfew enforcement, parents afraid to leave their homes to go to work, dangerous individuals in the community, request for non-profits to come together and do work in the community to help with crime prevention, ongoing crime between neighborhood groups, lack of quality of life and feeling safe in homes, concerns of releasing dangerous individuals back into the neighborhoods, lack of ordinance and law enforcement within the township, concern that the township isn't spending money appropriately, and that the township is not on board with the communities effort to save lives, has no plan, and that the police department is too political, concerns that the township doesn't care, concern that a white male in a white truck is selling guns to children for $12.00, and that WCSO is aware but not doing anything. These concerns were raised by township residents in Apple Ridge and West Willow neighborhoods.

4. CONSENT AGENDA

A. MINUTES OF THE MAY 16, 2023 WORK SESSION AND REGULAR MEETING
(TABLED AT THE JUNE 20, 2023 REGULAR MEETING)

B. MINUTES OF THE JUNE 20, 2023 WORK SESSION AND REGULAR MEETING

C. STATEMENTS AND CHECKS

1. STATEMENTS AND CHECKS FOR JULY 4, 2023 IN THE AMOUNT OF $1,101,591.59

2. STATEMENTS AND CHECKS FOR JULY 18, 2023 IN THE AMOUNT OF $1,704,302.26
3. CLARITY HEALTHCARE DEDUCTIBLE ACH FOR JUNE 2023 IN THE AMOUNT OF $41,581.26
4. CLARITY HEALTHCARE ADMIN FEE FOR JUNE 2023 IN THE AMOUNT OF $1,436.11

D. TREASURER'S REPORT JUNE 2023

A motion was made by Clerk Jarrell Roe and seconded by Trustee Peterson to remove from table the minutes of the May 16, 2023 work session and regular meeting.

The motion passed unanimously.

A motion was made by Trustee Hunter and seconded by Clerk Jarrell Roe to approve the minutes of the May 16, 2023 work session and regular meeting minutes with additional information on Say Yes to Seniors added to the work session minutes.

The motion passed unanimously.
A motion was made by Clerk Jarrell Roe and seconded by Treasurer Eldridge to approve the remainder of the consent agenda. He added that

The motion passed unanimously.

ATTORNEY REPORT

A. GENERAL LEGAL UPDATE

Attorney Winters spoke about a recent crime in the area that was allegedly perpetrated by a young man who had felony warrants for his arrest and that he is concerned about the number of offenders accused of a violent crime being released on bond.

Attorney Winters gave an update on the Gault Village Demolition stating that the completion date has been extended due to a change order that was recently approved by the board for additional asbestos abatement.

Attorney Winters stated that he was contacted by Captain Fred Anstead who inquired if he had the authorization to sign the estimate for repairs in the absence of Chief Copeland. Attorney Winters suggested this be added to the other business section of the agenda for board approval.

NEW BUSINESS

1. 1st READING OF PROPOSED ORDINANCE 2023-503, AN ORDINANCE TO AMEND CHAPTER 62, ARTICLE IV, SECTION 62-67 OF THE CODE OF ORDINANCES CHARTER TOWNSHIP OF YPSILANTI, TO ADJUST SEWER RATES

Clerk Jarrell Roe read the proposed ordinance into the record.

A motion was made by Clerk Jarrell Roe and seconded by Trustee Peterson to approve the 1st Reading of the proposed ordinance 2023-503, an ordinance to amend chapter 62, article IV, section 62-67 of the Code of Ordinances Charter Township of Ypsilanti, to adjust sewer rates (see attached).

Luke Blackburn, YCUA Director gave a review of YCUA's budget and also spoke about several rebate programs available to help a resident with their water bill.

Supervisor Stumbo stated that she would like to see what could be done to reduce the sewer costs for residents. She added that YCUA has more control over the sewer rates than the water rates because the water has to be purchased.

A roll call vote was held.

Stumbo	Yes	Hunter	Yes	Swanson	Yes
Jarrell Roe	Yes	Newman	Yes		
Eldridge	Yes	Peterson	Yes		

The motion passed unanimously.

2. 1st READING OF PROPOSED ORDINANCE 2023-504, AN ORDINANCE TO AMEND CHAPTER 62, ARTICLE IV, SECTION 62-76 (a)(1) OF THE CODE OF ORDINANCES CHARTER TOWNSHIP OF YPSILANTI, TO ADJUST WATER SERVICE RATES

Clerk Jarrell Roe read the proposed ordinance into the record.

A motion was made by Clerk Jarrell Roe and seconded by Treasurer Eldridge to approve the 1st Reading of the proposed ordinance 2023-504, an ordinance to amend chapter 62, article IV, section 62-76 (a)(1) of the Code of Ordinances Charter Township of Ypsilanti, to adjust water service rates (see attached).

Clerk Jarrell Roe stated that it was in the utility ordinance that YCUA could raise water rates to up to 4% and that the ordinance was being updated so that Municide could be updated.

Stumbo	Yes	Hunter	Yes	Swanson	Yes
Jarrell Roe	Yes	Newman	Yes		
Eldridge	Yes	Peterson	Yes		

The motion carried unanimously.

3. REQUEST APPROVAL FOR CHANGE ORDER #1 FOR THE PURCHASE OF THREE FORD F-150 SNOW PLOW TRUCKS FROM FELDMAN AUTOMOTIVE IN THE AMOUNT OF $8,100.00 BUDGETED IN LINE ITEM #661-268-985-000

A motion was made by Clerk Jarrell Roe and seconded by Trustee Hunter to approve change order #1 for the purchase of three Ford F-150 snow plow trucks from Feldman Automotive in the amount of $8,100.00 budgeted in line item #661-268-985-000.

Clerk Jarrell Roe stated this change order is needed due to a miscalculation in adding dual battery operation to the trucks.

The motion carried unanimously.

4. REQUEST TO CONFIRM AUTHORIZATION FOR CIRCUIT COURT LITIGATION TO ABATE A PUBLIC NUISANCE LOCATED AT 580 KANSAS AVE. BUDGETED IN LINE ITEM #101-729-801-023

A motion was made by Treasurer Eldridge and supported by Trustee Swanson to confirm authorization for circuit court litigation to abate a public nuisance located at 580 Kansas Ave. budgeted in line item #101-729-801-023.

Supervisor Stumbo stated there seems to be a number of vacant houses that have become homes for rats and if it is not treated quickly the problem will spread.

The motion carried unanimously.

5. REQUEST TO APPROVE THE RECOMMENDATION OF THE YPSILANTI TOWNSHIP ASSESSMENT DEPARTMENT THAT YPSILANTI TOWNSHIP CONSENT TO THE REVISION TO THE PLAT FOR PATTEE'S ADDITION TO YPSILANTI

A motion was made by Clerk Jarrell Roe and seconded by Treasurer Eldridge to approve the recommendation of the Ypsilanti Township Assessment Department that Ypsilanti Township consent to the revision to the plat for Pattee's Addition to Ypsilanti.

Clerk Jarrell Roe stated that Attorney Winters had suggested the motion being updated to authorize the Supervisor and Clerk to sign the consent.

The motion carried unanimously.

6. BUDGET AMENDMENT #10

Clerk Jarrell Roe read the budget amendment into the record.

A motion was made by Clerk Jarrell Roe and seconded Treasurer Eldridge to approve Budget Amendment #10 (please see attached).

The motion carried unanimously.

AUTHORIZATIONS AND BIDS

1. REQUEST TO SEEK SEALED BIDS FOR FENCE REPLACEMENT AT THE HEWITT RD. FIRE STATION

A motion was made by Clerk Jarrell Roe and seconded by Treasurer Eldridge to approve the request to seek sealed bids for fence replacement at the Hewitt Rd. fire station.

Supervisor Stumbo stated the bids would come back to the board for approval.

The motion carried unanimously.

2. REQUEST TO AWARD THE BID FO THE PURCHASE OF ONE (1) 2024 12+2 WHEELCHAIR PASSENGER BUS TO TESCO IN THE AMOUNT OF $119,072.00 BUDGETED IN LINE ITEM #282-901-981-045

A motion was made by Treasurer Eldridge and seconded by Trustee Swanson to award the bid for the purchase of one (1) 2021 12+2 wheelchair passenger bus to Tesco in the amount of $119,072.00 budgeted in line item #282-901-981-045.

The motion passed unanimously.

3. REQUEST TO AWARD THE BID FOR THE PURCHASE OF ONE (1) 2024 15 PASSENGER BUS TO HOLLAND BUS COMPANY IN THE AMOUNT OF $84,797.00 BUDGETED IN LINE ITEM #282-901-981-045

A motion was made by Trustee Peterson and seconded by Trustee Swanson to award the bid for the purchase of one (1) 2024 15 passenger bus to Holland Bus Company in the amount of $84,797.00 budgeted in line item #282-901-981-045.

Attorney Winters stated that he had reviewed the documents for the purchases of both buses, and they are in proper form for the Board's consideration.

The motion passed unanimously.

OTHER BUSINESS

1. REQUEST TO AUTHORIZE CAPTAIN FRED ANSTEAD TO SIGN AN ESTIMATE FOR FIRE TRUCK REPAIRS THAT ARE COVERED UNDER WARRANTY

A motion was made by Clerk Jarrell Roe and seconded by Treasurer Eldridge to authorize Captain Fred Anstead to sign an estimate for fire truck repairs that are covered under warranty.

The motion passed unanimously.

BOARD MEMBER UPDATES

Treasurer Eldridge stated he had met with Tamara Cook about an event she was hosting at Prospect Park about the recent shootings in our area.

Supervisor Stumbo stated that the jazz festival has been amazing and thanks to all the volunteers. She also added that this Saturday is the Rosie the Riveter Craft Show.

Trustee Swanson stated that she was sad about comments from residents on crime in their community. She added that it is unacceptable that the township has a five million dollar contract for police services but residents still do not feel safe in their neighborhoods. She added that to solve these problems people have to work together.

A motion to adjourn was made by Clerk Jarrell Roe and seconded by Treasurer Eldridge.

The motion carried unanimously.

The meeting was adjourned at approximately 8:35pm.

Respectfully Submitted,

Brenda L. Stumbo, Supervisor
Charter Township of Ypsilanti

Heather Jarrell Roe, Clerk
Charter Township of Ypsilanti

CHARTER TOWNSHIP OF YPSILANTI
PROPOSED ORDINANCE NO. 2023-503

An ordinance to amend Chapter 62, Article IV, Section 62-77 of the Code of Ordinances, Charter Township of Ypsilanti, to adjust sewage disposal rates.

BE IT ORDERED BY THE CHARTER TOWNSHIP OF YPSILANTI, that:

Section 62-77 of Chapter 62, Article IV of the Code of Ordinances be revised as follows:

For all billings rendered prior to September 1, 2023, existing sewage disposal service rates shall prevail. For all billings rendered on or after September 1, 2023, charges for sewage disposal services shall be as follows, for each bimonthly (two-month) period:

(1) **Readiness-to-serve rates based on size of meter:**

Meter Size (inch)	Sewage Rate
5/8-3/4	$ 18.17
1	$ 45.43
1-1/2	$ 90.86
2	$ 145.38
3	$ 454.30
4	$ 908.61
6	$ 1,817.20
8	$3,180.11
10	$4,997.31
12	$5,905.92

(2) **Commodity rate:** $2.99 per 100 cubic feet

I, Heather Jarrell Roe, Clerk of the Charter Township of Ypsilanti, County of Washtenaw, State of Michigan hereby certify approval of the first reading of Proposed Ordinance No. 2023-503 by the Charter Township of Ypsilanti Board of Trustees assembled at a regular meeting held on July 18, 2023. The second reading is scheduled to be heard on August 15, 2023.

Heather Jarrell Roe

Heather Jarrell Roe, Clerk
Charter Township of Ypsilanti

CHARTER TOWNSHIP OF YPSILANTI
PROPOSED ORDINANCE 2023-504

An ordinance to amend Chapter 62, Article IV, Section 62-76(a)(l) of the Code of Ordinances, Charter Township of Ypsilanti, to adjust water service rates.

BE IT ORDERED BY THE CHARTER TOWNSHIP OF YPSILANTI, that:

Section 62-76(a)(l) of Chapter 62, Article IV of the Code of Ordinances be revised as follows:

For all billings rendered prior to September 1, 2023, existing water service rates shall prevail. For all billings rendered on or after September 1, 2023, charges for water service rates shall be as follows, for each bimonthly (two-month) period:

(1) **Readiness-to-serve rates based on size of meter:**

Meter Size (inch)	Water Rate
5/8-3/4	$ 17.40
1	$ 43.50
1-1/2	$ 87.01
2	$ 139.21
3	$ 435.03
4	$ 870.06
6	$ 1,740.12
8	$ 3,045.21
10	$4,785.32
12	$5,655.38

(2) **Commodity rate:** $3.76 per 100 cubic feet

I, Heather Jarrell Roe, Clerk of the Charter Township of Ypsilanti, County of Washtenaw, State of Michigan hereby certify approval of the first reading of Proposed Ordinance No. 2023-504 by the Charter Township of Ypsilanti Board of Trustees assembled at a regular meeting held on July 18, 2023. The second reading is scheduled to be heard on August 15, 2023.

Heather Jarrell Roe

Heather Jarrell Roe, Clerk
Charter Township of Ypsilanti

CHARTER TOWNSHIP OF YPSILANTI
2023 BUDGET AMENDMENT # 10

July 18, 2023 - REVISED 7/18/23

AMOUNTS ROUNDED UP TO THE NEAREST DOLLAR

101 - GENERAL OPERATIONS FUND

Total Increase $11,043.00

Request to increase the budget for PTO payout at 75%. This will be funded by an appropriation of prior year fund balance.

Revenues:	**Prior Year Fund Balance**	**101-000-699.999**	**$1,052.00**
		Net Revenues	**$1,052.00**
Expenditures:	**Salaries Pay Out**	**101-191-708.004**	**$977.00**
	FICA	**101-191-715.000**	**$75.00**
		Net Expenditures	**$1,052.00**

Request to increase budget and add a new revenue line. This is for hazmat assessment/specifications development study done by SME for Gault Village demolition, which the Washtenaw County Brownfield Redevelopment Authority (WCBRA) has approved for reimbursement. This will be funded by WCBRA grant reimbursement.

Revenues:	**WASHTENAW COUNTY BROWNFIELD**	**101-000-583.000**	**$9,991.00**
		Net Revenues	**$9,991.00**
Expenditures:	**Blight removal - Gault Village**	**101-729-806.091**	**$9,991.00**
		Net Expenditures	**$9,991.00**

230- RECREATION FUND

Total Increase $7,000.00

Request to increase budget for the donation received from Northgate Construction for expenses related to the Rosie Show in July 2023. This will be funded by a donation.

Revenues:	**Contributions - Rosie & Art in the Park**	**230-000-675.008**	**$2,000.00**
		Net Revenues	**$2,000.00**
Expenditures:	**Special Events - Rosie**	**230-754-963.600**	**$2,000.00**
		Net Expenditures	**$2,000.00**

Request to increase budget for the donation received from Destination Ann Arbor for expenses related to the Jazz Concert Series. We budgeted for $5,000 and were given $10,000. This is to account for the additional funds and will be funded by a donation.

Revenues:	**Contributions - Jazz Festival**	**230-000-675.007**	**$5,000.00**
		Net Revenues	**$5,000.00**
Expenditures:	**Special Events - Jazz Festival**	**230-754-963.603**	**$5,000.00**
		Net Expenditures	**$5,000.00**

Motion to Amend the 2023 Budget (#10) REVISED

Move to increase the General Fund budget by $11,043 to $14,608,517 and approve the department line item changes as outlined.

Move to increase the Recreation Fund budget by $7,000 to $779,335 and approve the department line item changes as outlined.

Supervisor
BRENDA L. STUMBO
Clerk
HEATHER JARRELL ROE
Treasurer
STAN ELDRIDGE
Trustees
RYAN HUNTER
JOHN P. NEWMAN II
GLORIA PETERSON
DEBBIE SWANSON

YPSILANTI TOWNSHIP
— WHERE YOUR FUTURE GROWS —

Accounting Department

7200 S. Huron River Drive
Ypsilanti, MI 48197
Phone: (734) 544-4000 Ext 5
Fax: (734) 484-5154

STATEMENTS AND CHECKS

AUGUST 1, 2023 BOARD MEETING

ACCOUNTS PAYABLE CHECKS -	$	277,140.19
HAND CHECKS -	$	1,830,280.08
CREDIT CARDS PURCHASES -	$	0.00
GRAND TOTAL -	**$**	**2,107,420.27**

HAND CHECKS

Check Date	Check	Vendor Name	Amount	
Bank AP AP				
07/14/2023	194190	JUNGA'S ACE HARDWARE	435.26	
07/14/2023	194191	AAATA	525.27	
07/14/2023	194192	AAATA	542.81	
07/14/2023	194193	CONSTELLATION NEW ENERGY	2,431.07	
07/14/2023	194194	LINCOLN SCHOOL DISTRICT	310.75	
07/14/2023	194195	MERS	200,201.00	
07/14/2023	194196	MICHIGAN MUNICIPAL LEAGUE	2,464.00	
07/14/2023	194197	PNC INSTITUTIONAL INVESTMENTS	876,661.00	
07/14/2023	194198	PNC INSTITUTIONAL INVESTMENTS	366,182.00	
07/14/2023	194199	STATE OF MICHIGAN**	32,169.30	
07/14/2023	194200	TARGET SPECIALTY PRODUCTS	729.20	
07/14/2023	194201	VAN BUREN SCHOOL DISTRICT	50.19	
07/14/2023	194202	WASHTENAW COMMUNITY COLLEGE#	2,584.44	
07/14/2023	194203	WASHTENAW COMMUNITY COLLEGE#	2,675.98	
07/14/2023	194204	WASHTENAW COUNTY TREASURER	11,937.57	
07/14/2023	194205	WASHTENAW COUNTY TREASURER	5,616.54	
07/14/2023	194206	WASHTENAW INTERMEDIATE	4,292.37	
07/14/2023	194207	WASHTENAW INTERMEDIATE	4,466.00	
07/14/2023	194208	WAYNE ISD	28.90	
07/14/2023	194209	YPSILANTI COMMUNITY	6,527.47	
07/14/2023	194210	YPSILANTI COMMUNITY SCHOOLS - WR	7,750.83	
07/14/2023	194211	YPSILANTI COMMUNITY SCHOOLS - WR	12,684.57	
07/14/2023	194212	YPSILANTI COMMUNITY SCHOOLS - YP	6,171.78	
07/14/2023	194213	YPSILANTI DISTRICT LIBRARY	3,385.28	
07/14/2023	194214	YPSILANTI DISTRICT LIBRARY	1,964.87	
07/18/2023	194215	CLEAR RATE COMMUNICATIONS, INC	165.84	
07/18/2023	194216	COMCAST CABLE	184.08	
07/18/2023	194217	MR. BUBBLES AUTO SPA	160.00	
07/18/2023	194218	WEX BANK	2,709.52	
07/19/2023	194219	PAUL DIMARCO	100.00	
07/20/2023	194220	JOHN E. LAWRENCE	5,000.00	
07/20/2023	194221	PEARLINE DAVIS	315.35	
07/20/2023	194222	RHETT REYES	2,002.34	
07/26/2023	194223	COMCAST CABLE	9.22	
07/26/2023	194224	DTE ENERGY	81,352.93	
07/26/2023	194225	DTE ENERGY	14,170.99	
07/26/2023	194226	MATTHEW R. AND STEPHANIE M. WINTERS	3,000.00	V
07/26/2023	194227	VERIZON WIRELESS	488.60	
07/26/2023	194228	WASTE MANAGEMENT	1,171.92	
07/26/2023	194229	WASTE MANAGEMENT	5,844.32	
07/26/2023	194230	WASTE MANAGEMENT	3,154.09	
07/26/2023	194231	WASTE MANAGEMENT	75.14	
07/26/2023	194232	WASTE MANAGEMENT	512.59	
07/26/2023	194233	WASTE MANAGEMENT	174.70	
07/26/2023	194234	YAMAHA MOTOR FINANCE CORPORATION	6,900.00	
07/26/2023	194235	MATTHEW R. AND STEPHANIE M. WINTERS	3,000.00	
07/27/2023	194236	WASHTENAW COUNTY TREASURER#	150,000.00	

AP TOTALS:

Total of 47 Checks:	1,833,280.08
Less 1 Void Checks:	3,000.00
Total of 46 Disbursements:	1,830,280.08

A/P Checks

Check Date	Check	Vendor Name	Amount
Bank AP AP			
08/01/2023	194237	A DESIGN LINE	197.85
08/01/2023	194238	AAMCO TRANSMISSIONS AND	1,775.64
08/01/2023	194239	ALL STAR PRO GOLF	503.75
08/01/2023	194240	AMAZON CAPITAL SERVICES	770.11
08/01/2023	194241	ANN ARBOR CLEANING SUPPLY	304.02
08/01/2023	194242	APPLIED INNOVATION	6,927.35
08/01/2023	194243	ASSOCIATED FENCE	9,750.00
08/01/2023	194244	AUTO VALUE YPSILANTI	307.96
08/01/2023	194245	B-BALL SKILLS LLC	375.50
08/01/2023	194246	CAR TECH LLC	590.12
08/01/2023	194247	CARLISLE WORTMAN ASSOCIATES, INC.	840.00
08/01/2023	194248	CARTER LUMBER COMPANY	482.71
08/01/2023	194249	CDW GOVERNMENT INC	788.33
08/01/2023	194250	CGS, INC.	990.00
08/01/2023	194251	CHARTER TOWNSHIP OF SUPERIOR	39.23
08/01/2023	194252	CSI EMERGENCY APPARATUS, LLC	690.00
08/01/2023	194253	DABERKO LLC	388.50
08/01/2023	194254	DEBORAH COPE	100.00
08/01/2023	194255	DIANE RABAA	100.00
08/01/2023	194256	DOHYOUN LEE	40.00
08/01/2023	194257	DUANE COGAR	100.00
08/01/2023	194258	EDGE ONE	354.00
08/01/2023	194259	EDWARD MICHOWSKI	240.00
08/01/2023	194260	EMERGENCY MEDICAL PRODUCTS	306.35
08/01/2023	194261	EMERGENT HEALTH PARTNERS	8,430.55
08/01/2023	194262	ESTHER BARDON	108.00
08/01/2023	194263	EVERSOLE PROPERTIES, LLC	712.50
08/01/2023	194264	GARY STAFFORD	355.00
08/01/2023	194265	GOVERNMENTAL CONSULTANT SERVICES	3,401.79
08/01/2023	194266	GRAINGER	675.02
08/01/2023	194267	GREBORY MCMILLIN	540.00
08/01/2023	194268	GRIFFIN PEST SOLUTIONS	240.00
08/01/2023	194269	HOME DEPOT	2,990.47
08/01/2023	194270	INFINITY FITNESS LLC	315.00
08/01/2023	194271	KONE INC	2,203.02
08/01/2023	194272	LANSING SANITARY SUPPLY, INC	236.47
08/01/2023	194273	LAWRENCE HENDRICKS	70.00
08/01/2023	194274	LOOKING GOOD LAWNS	21,600.00
08/01/2023	194275	LORRAINE TAYLOR	45.00
08/01/2023	194276	LOWE'S	391.28
08/01/2023	194277	LOWER HURON SUPPLY	150.30
08/01/2023	194278	LUBRICATION ENGINEERS	912.42
08/01/2023	194279	MARIALANA BRANCH	160.00
08/01/2023	194280	MAX-VIEW WINDOW WASHING, INC.	1,575.00
08/01/2023	194281	METRO AIRPORT TRUCK	1,599.26
08/01/2023	194282	MICHIGAN CAT	113.40
08/01/2023	194283	MICHIGAN LINEN SERVICE, INC.	1,530.43
08/01/2023	194284	MICHIGAN POWER RODDING	896.00
08/01/2023	194285	MLIVE MEDIA GROUP	2,676.46
08/01/2023	194286	NEXTCARE URGENT CARE MICHIGAN	1,932.00
08/01/2023	194287	OFFICE EXPRESS	36.92
08/01/2023	194288	OOMA, INC.	249.57
08/01/2023	194289	ORCHARD, HILTZ & MCCLIMENT INC	9,287.50
08/01/2023	194290	PARKWAY SERVICES, INC.	1,980.00
08/01/2023	194291	PEARLINE DAVIS	185.50
08/01/2023	194292	PEPSI BEVERAGES COMPANY	403.67
08/01/2023	194293	PET WASTE ELIMINATOR	319.99
08/01/2023	194294	PLANETIZEN	149.50
08/01/2023	194295	PRECISION CONCRETE INC	125,297.81
08/01/2023	194296	PROPUMP AND CONTROLS	3,593.01
08/01/2023	194297	QUADIENT INC	437.90
08/01/2023	194298	RENEE SMITH	127.18
08/01/2023	194299	RHETT REYES	2,308.04
08/01/2023	194300	RICOH USA, INC.	277.45
08/01/2023	194301	ROBERT ACTON	1,150.00
08/01/2023	194302	ROGER JAUSSI	240.00
08/01/2023	194303	SAM'S CLUB DIRECT	49.38
08/01/2023	194304	SHIRLEY DUPREY	27.30
08/01/2023	194305	SHRADER TIRE & OIL	627.53
08/01/2023	194306	SITEONE LANDSCAPE SUPPLY, LLC	625.53
08/01/2023	194307	SME	19,490.25
08/01/2023	194308	SPARTAN DISTRIBUTORS	418.47
08/01/2023	194309	STANDARD PRINTING	175.00
08/01/2023	194310	STATE OF MICHIGAN - MDOT	1,191.83
08/01/2023	194311	STEPHEN BROWN	1,000.00
08/01/2023	194312	TARGET SPECIALTY PRODUCTS	190.00
08/01/2023	194313	TERMINIX PROCESSING CENTER	77.00
08/01/2023	194314	TESS SEIBERT	96.00

Check Date	Check	Vendor Name	Amount
08/01/2023	194315	ULLIANCE	1,084.80
08/01/2023	194316	UTILITIES INSTRUMENTATION SERV	16,197.00
08/01/2023	194317	VERIZON CONNECT FLEET USA	750.35
08/01/2023	194318	WASHTENAW COUNTY LEGAL NEWS	110.00
08/01/2023	194319	WASHTENAW COUNTY WATER RESOURCES	5,643.73
08/01/2023	194320	YPSILANTI ACE HARDWARE	35.95
08/01/2023	194321	YPSILANTI COMMUNITY	2,485.24

AP TOTALS:

Total of 85 Checks:	277,140.19
Less 0 Void Checks:	0.00
Total of 85 Disbursements:	277,140.19

Supervisor
BRENDA L. STUMBO
Clerk
HEATHER JARRELL ROE
Treasurer
STAN ELDRIDGE
Trustees
RYAN HUNTER
JOHN P. NEWMAN II
GLORIA PETERSON
DEBBIE SWANSON

YPSILANTI TOWNSHIP
— WHERE YOUR FUTURE GROWS —

Accounting Department

7200 S. Huron River Drive
Ypsilanti, MI 48197
Phone: (734) 544-4000 Ext 5
Fax: (734) 484-5154

STATEMENTS AND CHECKS

AUGUST 15, 2023 BOARD MEETING

ACCOUNTS PAYABLE CHECKS -	$	1,373,099.57
HAND CHECKS -	$	509,907.70
CREDIT CARD PURCHASES-	$	11,611.67
GRAND TOTAL -	**$**	**1,894,618.94**

Clarity Health Care Deductible –

ACH EFT - $35,820.48 (JULY)
ADMIN FEE - $1,443.28 (JULY)

CHECK NUMBERS 194322 - 194339

HAND CHECKS

Check Date	Check	Vendor Name	Amount
Bank AP AP			
07/31/2023	194322	BLUE CROSS BLUE SHIELD OF MI	199,231.49
07/31/2023	194323	BLUE CROSS BLUE SHIELD OF MI	28,459.75
07/31/2023	194324	DELTA DENTAL PLAN OF MICHIGAN	12,864.33
07/31/2023	194325	STANDARD INSURANCE COMPANY	4,278.75
07/31/2023	194326	STANDARD INSURANCE COMPANY	2,876.84
08/03/2023	194327	COMCAST BUSINESS	3,614.66
08/03/2023	194328	COMCAST CABLE	129.52
08/03/2023	194329	COMCAST CABLE	149.95
08/03/2023	194330	COMCAST CABLE	9,376.33
08/03/2023	194331	CONSTELLATION NEW ENERGY	1,089.62
08/03/2023	194332	DTE ENERGY	4,893.57
08/03/2023	194333	FEDERAL ENERGY REGULATORY COMM	2,106.70
08/03/2023	194334	GUARDIAN ALARM	500.46
08/03/2023	194335	VERIZON WIRELESS	479.13
08/03/2023	194336	WASTE MANAGEMENT	1,286.27
08/03/2023	194337	WASTE MANAGEMENT	233,526.77
08/03/2023	194338	YPSILANTI COMMUNITY	335.99
08/08/2023	194339	PROPUMP AND CONTROLS	4,707.57

AP TOTALS:

Total of 18 Checks:	509,907.70
Less 0 Void Checks:	0.00
Total of 18 Disbursements:	509,907.70

CHECK NUMBERS 194340 - 194441

A/P CHECKS

Check Date	Check	Vendor Name	Amount
Bank AP AP			
08/15/2023	194340	ABBEY DOOR	995.00
08/15/2023	194341	ACCUSHRED LLC	68.50
08/15/2023	194342	AMAZON CAPITAL SERVICES	1,190.83
08/15/2023	194343	ANN ARBOR CLEANING SUPPLY	1,035.42
08/15/2023	194344	ANN ARBOR SPARK	15,000.00
08/15/2023	194345	ANNETTE GONTARSKI	101.59
08/15/2023	194346	AUTO VALUE YPSILANTI	1,310.29
08/15/2023	194347	B-BALL SKILLS LLC	160.00
08/15/2023	194348	BACK TO NATURE LAWN CARE	125.00
08/15/2023	194349	BARR ENGINEERING COMPANY	10,175.00
08/15/2023	194350	BELFOR USA GROUP INC	1,654.01
08/15/2023	194351	BOYNE MOUNTAIN RESORT	211.38
08/15/2023	194352	BS & A SOFTWARE	1,020.00
08/15/2023	194353	BUG PRO MICHIGAN	159.00
08/15/2023	194354	CARTER LUMBER COMPANY	437.00
08/15/2023	194355	CEI MICHIGAN LLC	58,829.40
08/15/2023	194356	CERTASITE, LLC	433.56
08/15/2023	194357	CITY OF YPSILANTI FIRE DEPT.	1,300.00
08/15/2023	194358	CLEAR RATE COMMUNICATIONS, INC	262.89
08/15/2023	194359	COLMAN-WOLF SANITARY SUPPLY CO	338.22
08/15/2023	194360	COURT INNOVATIONS INC	270.00
08/15/2023	194361	CRYSTAL FLASH, INC.	4,080.39
08/15/2023	194362	D & B POWER ASSOCIATES, INC.	2,822.00
08/15/2023	194363	DANCE WITH ELEGANCE	1,258.60
08/15/2023	194364	DAWN FARM	525.00
08/15/2023	194365	DOHYOUN LEE	20.00
08/15/2023	194366	DOMINIC HOVING	20.00
08/15/2023	194367	EDDIE NAILOR JR	100.00
08/15/2023	194368	EDWARD MICHOWSKI	240.00
08/15/2023	194369	ELLEN TALIFARRO	556.73
08/15/2023	194370	EMPCO, INC.	8,861.67
08/15/2023	194371	FERGUSON ENTERPRISES, INC.	193.99
08/15/2023	194372	GENE BUTMAN FORD	1,885.34
08/15/2023	194373	GOOSE BUSTERS OF MICHIGAN, LLC	455.00
08/15/2023	194374	GRAINGER	1,106.77
08/15/2023	194375	HOME DEPOT	1,900.91
08/15/2023	194376	HUMAN RIGHTS IN PRACTICE	3,875.00
08/15/2023	194377	HUTZEL PLUMBING	1,780.00
08/15/2023	194378	J.F. MOORE & ASSOCIATES, LLC	32.00
08/15/2023	194379	J.F. MOORE & ASSOCIATES, LLC	32.00
08/15/2023	194380	J.F. MOORE & ASSOCIATES, LLC	16.00
08/15/2023	194381	J.F. MOORE & ASSOCIATES, LLC	16.00
08/15/2023	194382	J.F. MOORE & ASSOCIATES, LLC	16.00
08/15/2023	194383	J.F. MOORE & ASSOCIATES, LLC	32.00
08/15/2023	194384	J.F. MOORE & ASSOCIATES, LLC	32.00
08/15/2023	194385	J.F. MOORE & ASSOCIATES, LLC	32.00
08/15/2023	194386	JIBRIL NAEEM	1,830.50
08/15/2023	194387	KENYA WILSON	100.00
08/15/2023	194388	LANGUAGE LINE SERVICES	498.31
08/15/2023	194389	LAUREN VASQUEZ	358.00
08/15/2023	194390	LAWRENCE HENDRICKS	35.00
08/15/2023	194391	LINDE GAS & EQUIPMENT INC	391.09
08/15/2023	194392	LOOKING GOOD LAWNS	8,765.00
08/15/2023	194393	LOWE'S	56.40
08/15/2023	194394	LOWER HURON SUPPLY	85.25
08/15/2023	194395	MARIALANA BRANCH	160.00
08/15/2023	194396	MCLAIN AND WINTERS	161,171.61
08/15/2023	194397	MICHAEL COX	750.00
08/15/2023	194398	MICHAEL J. CROMER	125.00
08/15/2023	194399	MICHIGAN LINEN SERVICE, INC.	1,339.23
08/15/2023	194400	MICHIGAN POWER RODDING	245.00
08/15/2023	194401	MICHIGAN TOURNAMENT FLEET, INC	1,130.00
08/15/2023	194402	MIDWESTERN CONSULTING	6,395.10
08/15/2023	194403	MOBILE BLASTMAN	350.00
08/15/2023	194404	OAKLAND COUNTY	2,036.00
08/15/2023	194405	OFFICE EXPRESS	80.00
08/15/2023	194406	OKINAWAN KARATE CLUB	415.80
08/15/2023	194407	ONSITE SUBSTANCE ABUSE TESTING	314.00
08/15/2023	194408	ORKIN LLC	625.00
08/15/2023	194409	PARKWAY SERVICES, INC.	850.00
08/15/2023	194410	PEARLINE DAVIS	593.60
08/15/2023	194411	PEPSI BEVERAGES COMPANY	302.61
08/15/2023	194412	PM TECHNOLOGIES, LLC	512.00
08/15/2023	194413	RHETT REYES	2,109.33
08/15/2023	194414	ROBERT ACTON	1,400.00
08/15/2023	194415	ROGER JAUSSI	120.00
08/15/2023	194416	ROTARY CLUB OF YPSILANTI	192.00
08/15/2023	194417	SAM'S CLUB DIRECT	943.51

Check Date	Check	Vendor Name	Amount
08/15/2023	194418	SHANNON KHALIFA	100.00
08/15/2023	194419	SHRADER TIRE & OIL	174.55
08/15/2023	194420	SITEONE LANDSCAPE SUPPLY, LLC	1,265.98
08/15/2023	194421	SMART BUSINESS SOURCE LLC	42.91
08/15/2023	194422	SOUTHERN COMPUTER WAREHOUSE	1,412.46
08/15/2023	194423	SPARTAN DISTRIBUTORS	142.87
08/15/2023	194424	SPICER GROUP	15,056.75
08/15/2023	194425	STANDARD PRINTING	745.00
08/15/2023	194426	STATE OF MICHIGAN	8,900.54
08/15/2023	194427	STEPHEN BROWN	1,900.00
08/15/2023	194428	STERICYCLE INC	256.29
08/15/2023	194429	TESS SEIBERT	96.00
08/15/2023	194430	ULINE	191.97
08/15/2023	194431	UNITED STATES POSTAL SERVICE	10,000.00
08/15/2023	194432	UNIVERSITY TRANSLATORS	1,488.97
08/15/2023	194433	UTILITIES INSTRUMENTATION SERV	380.00
08/15/2023	194434	VIRGIL MINGAS	450.00
08/15/2023	194435	W.J. O'NEIL COMPANY	4,554.80
08/15/2023	194436	WASHTENAW COUNTY BAR ASSOC.	340.00
08/15/2023	194437	WASHTENAW COUNTY LEGAL NEWS	100.00
08/15/2023	194438	WASHTENAW COUNTY ROAD COMMISSION	1,005,780.65
08/15/2023	194439	WASHTENAW COUNTY SHERIFF'S OFFICE	261.00
08/15/2023	194440	WASHTENAW COUNTY TREASURER#	209.18
08/15/2023	194441	YPSILANTI ACE HARDWARE	3.82

AP TOTALS:

Total of 102 Checks:	1,373,099.57
Less 0 Void Checks:	0.00
Total of 102 Disbursements:	1,373,099.57

CHECK REGISTER FOR CHARTER TOWNSHIP OF YPSILANTI
CHECK NUMBERS 97 - 98

CREDIT CARDS

Check Date	Check	Vendor Name	Invoice Vendor	Description	Amount
Bank CARDS COMERICA COMMERICAL CARD					
08/15/2023	97(E)	COMERICA BANK	DELUX RENTAL	RENTAL OF SNAKE FOR COMMUNTIY	112.50
			STATE OF MICHIGAN*#	CEO RENEWAL - SHANNON STRAUB	30.00
			WASHTENAW COUNTY CLERK/REGIST	RECORDED DECLARATION- LOONFEAT	2.40
			SOCIETY FOR HUMAN RESOURCES	2023 MEMBERSHIP RENEWAL	244.00
			SAM'S CLUB DIRECT	BUNN COFFEEMAKER - RSD	331.50
			GORDON FOOD SERVICE INC.	OPERATING SUPPLIES AND FOOD AN	354.69
			GORDON FOOD SERVICE INC.	OPERATING SUPPLIES AND FOOD AN	515.65
			GORDON FOOD SERVICE INC.	OPERATING SUPPLIES AND FOOD AN	795.58
			GORDON FOOD SERVICE INC.	FOOD AND BEVERAGE FOR RESALE I	236.42
			GORDON FOOD SERVICE INC.	OPERATING SUPPLIES AND FOOD AN	425.07
			GORDON FOOD SERVICE INC.	OPERATING SUPPLIES AND FOOD AN	624.16
			ZOHO CORPORATION	OPMANAGER RENEWAL	2,936.00
			WASHTENAW COUNTY REGISTER OF	REGISTER OF DEEDS RELATED TO L	30.00
			UNITED STATES POST OFFICE	PASSPORT POSTAGE WEEK OF 7-10-	67.35
			UNITED STATES POST OFFICE	PASSPORT POSTAGE WEEK OF 7-3-2	86.45
			UNITED STATES POST OFFICE	POSTAGE WEEK OF JUNE 26, 2023	67.35
			WASHTENAW COMMUNITY COLLEGE'	HUVACO MEMBERSHIP FOR D. BELLE	250.00
			TRACTOR SUPPLY COMPANY	OPERATION SUPPLIES: POND DYE &	399.94
			LOWE'S	JOB SITE BOX - PARKS	599.00
			HARBOR FREIGHT	MEGAPHONE - JAZZFEST 2023	44.97
			MADCM	MAGISTRATE NELSON'S CONFERENCE	175.00
			DOLLAR TREE	50 & BEYOND CRAFT SUPPLIES - R	104.04
			BOYNE MOUNTAIN RESORT	DEPOSIT FOR LODGING FOR TRAVIS	237.12
			CGS, INC.	SAFETY TRAINING- AED/CPR	965.00
			IPS DRUG TESTING	RANDOM DOT SCREENING FOR W. SW	45.00
			LEO'S CONEY ISLAND	LUNCH FOR THE EMPCO TESTING PA	50.04
			MIMECAST NORTH AMERICA, INC	DMARC ANALYZER	514.08
			PACK N PARCEL	SHIPPING TO VENDOR	16.91
			RESTAURANT DEPOT	WATER FOR ALL STATIONS	23.34
			REBRANDLY	URL SHORTENER	392.11
			TRANSUNION RISK & ALTERNATIVE	MONTHLY SUBSCRIPTION FEES FOR	75.00
			TRANSUNION RISK & ALTERNATIVE	MONTHLY SUBSCRIPTION FEES FOR	75.00
			ZAPIER, INC.	ZAPIER SUBSCRIPTION	588.00
			ZENFOLIO	ZENFOLIO SUBSCRIPTION	198.00
					11,611.67

CARDS TOTALS:

Total of 1 Checks:	11,611.67
Less 0 Void Checks:	0.00
Total of 1 Disbursements:	11,611.67

YPSILANTI TOWNSHIP
— OFFICE OF THE TREASURER —

MONTHLY TREASURER'S REPORT
STAN ELDRIDGE
JULY 1, 2023 - JULY 31, 2023

Account Name	Beginning Balance	Cash Receipts	Cash Disbursements	Ending Balance
101 - General Fund	8,019,588.97	4,038,074.80	4,803,096.21	7,254,567.56
101 - Payroll	204,589.04	1,165,442.31	1,173,453.37	196,577.98
101 - Willow Run Escrow	145,953.67	49.59	0.00	146,003.26
206 - Fire Department	4,554,139.90	18,892.93	358,777.24	4,214,255.59
208 - Parks Fund	19,969.07	83.54	403.69	19,648.92
213 - Roads/Bike Path/Rec/General Fund	2,129,414.62	9,372.60	39,680.58	2,099,106.64
216 - Fire Pension & OPEB Millage Fund	1,312,563.66	2,502.26	1,242,843.00	72,222.92
217 - Fire Special Millage Capital Fund	1,947,992.37	8,252.90	0.00	1,956,245.27
226 - Environmental Services	3,351,514.24	11,980.97	250,544.86	3,112,950.35
230 - Recreation	255,375.27	68,545.27	85,570.39	238,350.15
236 - 14-B District Court	193,700.89	42,885.75	158,464.03	78,122.61
244 - Economic Development	73,137.41	309.46	0.00	73,446.87
249 - Building Department Fund	1,722,117.49	63,394.10	76,859.86	1,708,651.73
250 - LDFA Tax	20,771.97	87.33	0.00	20,859.30
252 - Hydro Station Fund	991,136.81	29,939.61	36,707.91	984,368.51
266 - Law Enforcement Fund	13,078,103.29	61,326.45	1,102,778.08	12,036,651.66
282 - Cares Act Fund	9,544,948.28	38,678.71	725,838.06	8,857,788.93
284 - Opioid Settlement Fund	20,325.78	85.43	0.00	20,411.21
287 - Nuisance Abatement Fund	71,220.86	832.71	1,490.00	70,563.57
398 - LDFA 2006 Bonds	18,512.04	77.84	0.00	18,589.88
584 - Green Oaks Golf Course	280,963.91	329,771.15	289,705.21	321,029.85
597 - Compost Site	818,271.09	37,247.82	62,136.18	793,382.73
661 - Motor Pool	378,991.88	1,596.83	15,030.77	365,557.94
702 - General Tax Collection	149,498.19	6,716.47	130,807.41	25,407.25
703 - Current Tax Collections	10.53	4,936,662.24	1,957,875.67	2,978,797.10
707 - Bonds & Escrow/GreenTop	2,016,456.43	20,683.88	17,206.50	2,019,933.81
708 - Fire Withholding Bonds	149,307.82	15,061.87	0.00	164,369.69
GRAND TOTAL	**51,468,575.48**	**10,908,554.82**	**12,529,269.02**	**49,847,861.28**

ATTORNEY REPORT

GENERAL LEGAL UPDATE

OLD BUSINESS

CHARTER TOWNSHIP OF YPSILANTI
PROPOSED ORDINANCE NO. 2023-503

An ordinance to amend Chapter 62, Article IV, Section 62-77 of the Code of Ordinances, Charter Township of Ypsilanti, to adjust sewage disposal rates.

BE IT ORDERED BY THE CHARTER TOWNSHIP OF YPSILANTI, that:

Section 62-77 of Chapter 62, Article IV of the Code of Ordinances be revised as follows:

For all billings rendered prior to September 1, 2023, existing sewage disposal service rates shall prevail. For all billings rendered on or after September 1, 2023, charges for sewage disposal services shall be as follows, for each bimonthly (two-month) period:

(1) **Readiness-to-serve rates based on size of meter:**

Meter Size (inch)	Sewage Rate
5/8-3/4	$ 18.17
1	$ 45.43
1-1/2	$ 90.86
2	$ 145.38
3	$ 454.30
4	$ 908.61
6	$ 1,817.20
8	$3,180.11
10	$4,997.31
12	$5,905.92

(2) **Commodity rate:** $2.99 per 100 cubic feet

I, Heather Jarrell Roe, Clerk of the Charter Township of Ypsilanti, County of Washtenaw, State of Michigan hereby certify approval of the first reading of Proposed Ordinance No. 2023-503 by the Charter Township of Ypsilanti Board of Trustees assembled at a regular meeting held on July 18, 2023. The second reading is scheduled to be heard on August 15, 2023.

Heather Jarrell Roe

Heather Jarrell Roe, Clerk
Charter Township of Ypsilanti

CHARTER TOWNSHIP OF YPSILANTI
PROPOSED ORDINANCE 2023-504

An ordinance to amend Chapter 62, Article IV, Section 62-76(a)(l) of the Code of Ordinances, Charter Township of Ypsilanti, to adjust water service rates.

BE IT ORDERED BY THE CHARTER TOWNSHIP OF YPSILANTI, that:

Section 62-76(a)(l) of Chapter 62, Article IV of the Code of Ordinances be revised as follows:

For all billings rendered prior to September 1, 2023, existing water service rates shall prevail. For all billings rendered on or after September 1, 2023, charges for water service rates shall be as follows, for each bimonthly (two-month) period:

(1) **Readiness-to-serve rates based on size of meter:**

Meter Size (inch)	Water Rate
5/8-3/4	$ 17.40
1	$ 43.50
1-1/2	$ 87.01
2	$ 139.21
3	$ 435.03
4	$ 870.06
6	$ 1,740.12
8	$ 3,045.21
10	$4,785.32
12	$5,655.38

(2) **Commodity rate:** $3.76 per 100 cubic feet

I, Heather Jarrell Roe, Clerk of the Charter Township of Ypsilanti, County of Washtenaw, State of Michigan hereby certify approval of the first reading of Proposed Ordinance No. 2023-504 by the Charter Township of Ypsilanti Board of Trustees assembled at a regular meeting held on July 18, 2023. The second reading is scheduled to be heard on August 15, 2023.

Heather Jarrell Roe

Heather Jarrell Roe, Clerk
Charter Township of Ypsilanti

Dedicated to Providing Top Quality, Cost Effective, and
Environmentally Safe Water and Wastewater Services to Our Customers

YPSILANTI COMMUNITY UTILITIES AUTHORITY

2777 STATE ROAD
YPSILANTI, MICHIGAN 48198-9112
TELEPHONE: 734-484-4600
WEBSITE: www.ycua.org

June 29, 2023

VIA EMAIL

Ms. Heather Jarrell Roe, Clerk
CHARTER TOWNSHIP OF YPSILANTI
7200 South Huron River Drive
Ypsilanti, Michigan 48197

Re: **Water and Sewer Rate Changes**

Dear Ms. Jarrell Roe:

Please be advised the Authority's Board of Commissioners approved a 4% water and readiness-to-serve rate increase at their regular meeting on June 28, 2023. The Ypsilanti Township Utilities Ordinance authorizes the Authority's Board to increase the water rate equally commensurate with the increase it receives from the Great Lakes Water Authority (GLWA). GLWA's increase to the Authority was 4% which will become effective on July 1, 2023. Therefore, no action by the Township Board is required. Please consider this as the Township's notice of the increase in the water and readiness-to-serve rate which becomes effective September 1, 2023. Please find enclosed the requisite materials needed for the adoption of this ordinance.

At the same meeting, the Authority's Board approved a recommendation to the Township Board of Trustees to increase the sewer and readiness to serve rate by 4%. The ordinance needed to approve the increase is attached as well as the supporting documentation. The combined effect of these rate adjustments will be a 4% increase in a Township Division customer's bimonthly bill.

Please place this item on the Township Trustees' agenda for their consideration at the July 18 and August 15, 2023 meetings. Please also forward the supporting material attached for their use in considering this ordinance adoption request. Please contact me with any questions or concerns regarding this information by email at lblackburn@ycua.org or by phone at 734-484-4600 ext. 116.

Sincerely,

LUTHER BLACKBURN, Executive Director
Ypsilanti Community Utilities Authority

LB/kks
Enclosures
cc w/encl.: YCUA Board of Commissioners
Ms. Brenda L. Stumbo
Ms. Lisa Stanfield
Mr. Stan Eldridge
Mr. Matthew T. Jane
Mr. Dwayne Harrigan
Ms. Gail M. Thomas

YCUA Township Division

	water	sewer	Total
Current			
Ready to Service	$16.73	$17.47	$34.21
Commodity rate (per unit)	$3.62	$2.88	$6.49

Average User residential

10 units(7,480 gallons) per 2 month billing cycle

	water	sewer	Total
Ready to Service	$16.73	$17.47	$34.21
10 units	$36.17	$28.75	$64.93
Total	$52.91	$46.23	$99.13

Effect on average Township customers with a proposed 4.00% water rate increase, a sewer rate increase of 4.00%. Combined effect 4.00%

	water	sewer	Total
PROPOSED: September 1, 2023			
Ready to Service	$ 17.40	$ 18.17	$35.58
Commodity rate (per unit)	$ 3.76	$ 2.99	$6.75

Average User residential (proposed)

10 units(7,480 gallons) per 2 month billing cycle

	water	sewer	Total
Ready to Service	$17.40	$18.17	$35.58
10 units	$37.62	$29.90	$67.52
Total	$55.02	$48.08	$103.10
Increase in bill			$ 3.97
Percent Change	4.00%	4.00%	4.00%

Dedicated to Providing Top Quality, Cost Effective, and Environmentally Safe Water and Wastewater Services to Our Customers

YPSILANTI COMMUNITY UTILITIES AUTHORITY

2777 STATE ROAD
YPSILANTI, MICHIGAN 48198-9112
TELEPHONE: 734-484-4600
WEBSITE: www.ycua.org

City Water Rates -

YCUA City Division Water Rate

Effective September 1, 2023

Water rate increase	4.00%
RTS increase	4.00%

Meter Size/Inch	RTS Bi-Monthly Water Rate	RTS Monthly Water Rate
5/8-3/4	$21.63	$10.82
1	$54.08	$27.04
1 1/2	$108.15	$54.08
2	$173.03	$86.52
3	$540.73	$270.37
4	$1,081.46	$540.73
6	$2,162.92	$1,081.46
8	$3,785.10	$1,892.56
10	$5,948.02	$2,974.02
12	$7,029.48	$3,514.75
Commodity rate (per 100 cf:)	$6.18	

City Sewer Rates -

YCUA City Division Sewer Rate

Effective September 1, 2023

Sewer rate increase	4.00%
RTS increase	4.00%

Meter Size/Inch	RTS Bi-Monthly Sewer Rate	RTS Monthly Sewer Rate
5/8-3/4	$ 19.02	$9.510
1	$ 47.54	$23.770
1 1/2	$ 95.08	$47.540
2	$ 152.13	$76.065
3	$ 475.41	$237.705
4	$ 950.81	$475.405
6	$ 1,901.63	$950.815
8	$ 3,327.85	$1,663.925
10	$ 5,229.46	$2,614.730
12	$ 6,180.28	$3,090.140
Commodity rate (per 100 cf:)	$ 3.40	

YCUA bills in units, 1 unit = 100 cubic ft = 748 gallons.

Township Water Rates -

YCUA Township Division Water Rate

Effective September 1, 2023

Water rate increase	4.00%
RTS increase	4.00%

Meter Size/Inch	RTS Bi-Monthly Water Rate	RTS Monthly Water Rate
5/8-3/4	$17.40	$8.700
1	$43.50	$21.750
1 1/2	$87.01	$43.505
2	$139.21	$69.605
3	$435.03	$217.515
4	$870.06	$435.030
6	$1,740.12	$870.060
8	$3,045.21	$1,522.605
10	$4,785.32	$2,392.660
12	$5,655.38	$2,827.690
Commodity rate (per 100 cf:)	$ 3.76	

Township Sewer Rates -

YCUA Township Division Sewer Rate

Effective September 1, 2023

Sewer rate increase	4.00%
RTS increase	4.00%

Meter Size/Inch	RTS Bi-Monthly Sewer Rate	RTS Monthly Sewer Rate
5/8-3/4	$ 18.17	$9.085
1	$ 45.43	$22.715
1 1/2	$ 90.86	$45.430
2	$ 145.38	$72.690
3	$ 454.30	$227.150
4	$ 908.61	$454.305
6	$ 1,817.20	$908.600
8	$ 3,180.11	$1,590.055
10	$ 4,997.31	$2,498.655
12	$ 5,905.92	$2,952.960
Commodity rate (per 100 cf:)	$ 2.99	

YCUA bills in units, 1 unit = 100 cubic ft = 748 gallons.

NEW BUSINESS

Charter Township of Ypsilanti

RESOLUTION NO. 2023-12

A Resolution Amending the Ypsilanti Township Zoning Ordinance

(In Reference to Proposed Ordinance 2023-505)

Whereas, the Township Planning Department Staff completed a detailed review of the Township's Zoning Code; and

Whereas, at its regularly scheduled Planning Commission meeting held July 25, 2023, the Planning Commission held a public hearing.

Whereas, the Planning Commission for Ypsilanti Township recommended approval of the proposed zoning amendments to the Township's Zoning Code to the Township Board of Trustees at its regular meeting of July 25, 2023 which changes can be summarized as follows:

1. Article 4, Sec. 407. – Residential Multiple-Family: Low Density
    a. The expansion or construction of a single-family dwelling or accessory structure shall conform with the applicable minimum yard and setback requirements of the most comparable single-family zoning district.
2. Article 4, Sec. 408. – Residential Multiple-Family: Medium Density
    a. The expansion or construction of a single-family dwelling or accessory structure shall conform with the applicable minimum yard and setback requirements of the most comparable single-family zoning district.
3. Article 4, Sec. 409. – Residential Multiple-Family: High Density
    a. The expansion or construction of a single-family dwelling or accessory structure shall conform with the applicable minimum yard and setback requirements of the most comparable single-family zoning district.
4. Article 4, Sec. 420.5 – Industrial Use Table
    a. Amended industrial district use table.
5. Article 5, Sec. 506. – Town Center
    a. Amending group 2 to allow for use groups 1, 2, 3, and 4.
6. Article 11, Sec. 1128. – Temporary Sidewalk Outdoor and Tent Sales for Principal Use.
    a. Address the parking requirements of temporary sidewalk and outdoor sales.
7. Article 13, Sec. 1305. – Fences and Walls.
    a. Eliminate illustration in Sec. 1305 and amend 1305.2.A to include through lots.
8. Article 15, Sec. 1509. – Signs.

a. Amend Sec. 1509.6.A.2.b. to change the area of wall signs permitted for each "lot" to "unit" as was intended. To amend Sec. 1509.10. to eliminate wall painted signs.

Now Therefore,

Be it resolved, that the Charter Township of Ypsilanti Board of Trustees does hereby approve Ordinance No. 2023-505 as attached, by amending Articles of the Township's Zoning Ordinance as noted, replacing it with proposed Ordinance No. 2023-505.

CHARTER TOWNSHIP OF YPSILANTI
PROPOSED ORDINANCE NO. 2023-505

An Ordinance to Amend Articles 4, 5, 11, 13, and 15 of the Ypsilanti Township Zoning Ordinance

Article 4 – District Regulations Zoning Text Amendments

Sections 407, 408, and 409 – Residential Multiple-Family Districts

Single-family residential uses are permitted in the three residential multiple-family districts (RM-LD, RM-MD, and RM-HD) but the dimensional requirements do not contemplate setbacks for single-family residential uses, only multiple-family residential uses. Requiring a single-family residential dwelling to comply with the required 60-foot aggregate side yard setback, for example, of the RM-LD district makes most typical platted subdivision lots unbuildable except for variance approval. On October 5, 2022, staff brought before the Zoning Board of Appeals a request by Habitat for Humanity to seek a variance from Sec. 407 due to the inability for them to meet the aggregate 60-foot side yard setback requirement on a RM-LD lot located at 966 N. Prospect. The lot was only 51' wide rendering the construction of a single-family home impossible with the current standards. If this Zoning Text Amendment was in effect at the time, Habitat for Humanity could simply use the dimensional standards of the most similar single-family lot, in this case, a R-5 One-Family Residential lot. **Staff recommends the following language be included in the supplemental district standards for all three multiple-family districts:**

The expansion or construction of a single-family dwelling or accessory structure shall conform with the applicable minimum yard and setback requirements of the most comparable single-family zoning district.

Sec. 407. - Residential multiple-family: low density:

1. *Intent:* The intent is to provide sites for low-density multiple-family dwelling structures, and related uses.
2. *Use regulations:* Section 420 sets forth permitted, accessory and special land uses within the RM-LD residential district.
3. *Dimensional requirements:* The following dimensional requirements shall apply to the RM-LD residential district.

Min. Lot Size		Max. Lot Coverage (all buildings)	Max. Height		Min. Yards & Setbacks in feet			
in acres	Width in feet		Stories	Feet	Front	Side		Rear
						Least	Total	
1 or 3[1]	80	25%	3	35	30	30	60	30

[1] Minimum total lot area of one (1) acre for residential use with a minimum lot area of seven thousand two hundred (7,200) square feet per dwelling unit, and minimum lot area of three (3) acres for non-residential uses

4. *Supplemental district standards:*

   A. In addition to those bulk regulations listed in Section 407.3, all development shall conform to supplemental bulk regulations listed in Section 419.

   B. The following minimum dwelling unit size requirements shall apply to the RM-MD residential districts

Efficiency	1 Bedroom	2 Bedroom	3 Bedroom	4+ Bedroom
350 sq. ft.	500 sq. ft.	700 sq. ft.	900 sq. ft.	1,100 sq. ft.

   C. The expansion or construction of a single-family dwelling or accessory structure shall conform with the applicable minimum yard and setback requirements of the most comparable single-family zoning district.

Article 4 – District Regulations Zoning Text Amendments

Sections 407, 408, and 409 – Residential Multiple-Family Districts

Single-family residential uses are permitted in the three residential multiple-family districts (RM-LD, RM-MD, and RM-HD) but the dimensional requirements do not contemplate setbacks for single-family residential uses, only multiple-family residential uses. Requiring a single-family residential dwelling to comply with the required 60-foot aggregate side yard setback, for example, of the RM-LD district makes most typical platted subdivision lots unbuildable except for variance approval. On October 5, 2022, staff brought before the Zoning Board of Appeals a request by Habitat for Humanity to seek a variance from Sec. 407 due to the inability for them to meet the aggregate 60-foot side yard setback requirement on a RM-LD lot located at 966 N. Prospect. The lot was only 51' wide rendering the construction of a single-family home impossible with the current standards. If this Zoning Text Amendment was in effect at the time, Habitat for Humanity could simply use the dimensional standards of the most similar single-family lot, in this case, a R-5 One-Family Residential lot. **Staff recommends the following language be included in the supplemental district standards for all three multiple-family districts:**

The expansion or construction of a single-family dwelling or accessory structure shall conform with the applicable minimum yard and setback requirements of the most comparable single-family zoning district.

Sec. 408. - Residential multiple-family: medium density:

1. *Intent:* The intent is to provide sites for medium-density multiple-family dwelling structures, and related uses.
2. *Use regulations:* Section 420 sets forth permitted, accessory and special land uses within the RM-MD residential district.
3. *Dimensional requirements:* The following dimensional requirements shall apply to the RM-MD residential districts.

Min. Lot Size		Max. Lot Coverage (all buildings)	Max. Height		Min. Yards & Setbacks in feet			
						Side		
in acres	Width in feet		Stories	Feet	Front	Least	Total	Rear
1 or 3[1]	100	15%	4	45	40	40	80	50

[1] Minimum total lot area of one (1) acre for residential use with a minimum lot area of seven thousand two hundred (7,200) square feet per dwelling unit, and minimum lot area of three (3) acres for non-residential uses.

4. *Supplemental district standards:*
   A. In addition to those bulk regulations listed in Section 408.3, all development shall conform to supplemental bulk regulations listed in Section 419.
   B. The following minimum dwelling unit size requirements shall apply to the RM-MD residential districts

Efficiency	1 Bedroom	2 Bedroom	3 Bedroom	4+ Bedroom
350 sq. ft.	500 sq. ft.	700 sq. ft.	900 sq. ft.	1,100 sq. ft.

   C. The expansion or construction of a single-family dwelling or accessory structure shall conform with the applicable minimum yard and setback requirements of the most comparable single-family zoning district.

Article 4 – District Regulations Zoning Text Amendments

Sections 407, 408, and 409 – Residential Multiple-Family Districts

Single-family residential uses are permitted in the three residential multiple-family districts (RM-LD, RM-MD, and RM-HD) but the dimensional requirements do not contemplate setbacks for single-family residential uses, only multiple-family residential uses. Requiring a single-family residential dwelling to comply with the required 60-foot aggregate side yard setback, for example, of the RM-LD district makes most typical platted subdivision lots unbuildable except for variance approval. On October 5, 2022, staff brought before the Zoning Board of Appeals a request by Habitat for Humanity to seek a variance from Sec. 407 due to the inability for them to meet the aggregate 60-foot side yard setback requirement on a RM-LD lot located at 966 N. Prospect. The lot was only 51' wide rendering the construction of a single-family home impossible with the current standards. If this Zoning Text Amendment was in effect at the

time, Habitat for Humanity could simply use the dimensional standards of the most similar single-family lot, in this case, a R-5 One-Family Residential lot. **Staff recommends the following language be included in the supplemental district standards for all three multiple-family districts:**

The expansion or construction of a single-family dwelling or accessory structure shall conform with the applicable minimum yard and setback requirements of the most comparable single-family zoning district.

Sec. 409. - Residential multiple-family: high density:

1. *Intent:* The intent is to provide sites for high-density multiple-family dwelling structures, and related uses.
2. *Use regulations:* Section 420 sets forth permitted, accessory and special land uses within the RM-HD residential district.
3. *Dimensional requirements:* The following dimensional requirements shall apply to the RM-HD residential districts.

Min. Lot Size		Max. Lot Coverage (all buildings)	Max. Height		Min. Yards & Setbacks in feet			
in acres	Width in feet		Stories	Feet	Front	Side		Rear
						Least	Total	
1 or 3[1]	150	15%	8	85	50	50	100	50

[1] Minimum total lot area of one (1) acre for residential use with a minimum lot area of seven thousand two hundred (7,200) square feet per dwelling unit, and minimum lot area of three (3) acres for non-residential uses

4. *Supplemental district standards:*
   A. In addition to those bulk regulations listed in Section 409.3, all development shall conform to supplemental bulk regulations listed in Section 419.
   B. The following minimum dwelling unit size requirements shall apply to the RM-H residential districts:

Efficiency	1 Bedroom	2 Bedroom	3 Bedroom	4+ Bedroom
350 sq. ft.	500 sq. ft.	700 sq. ft.	900 sq. ft.	1,100 sq. ft.

   C. The expansion or construction of a single-family dwelling or accessory structure shall conform with the applicable minimum yard and setback requirements of the most comparable single-family zoning district.

Article 4, Section 420 – Residential Use Table

Staff suggests amending the industrial schedule of uses to provide for uses more in line with the Master Plan, industrial users that are currently operating in the township, and uses more aligned with today's economic trends. Please find below the proposed changes:

Industrial Districts Use Table	I-T	L-M	ICR	Notes
P = Permitted Use SL-PC = Special Use Planning Commission Approval SL-TB = Special Use Township Board Approval A = Accessory Use — = Not permitted				
Blast furnace, steel furnace, blooming or rolling mill		P		Located not less than eight hundred (800) feet distance from any residential district and not less than three hundred (300) feet distant from any other district
Central dry-cleaning plant, service to more than one facility	P	P		
Crematorium		~~SL-PC~~	SL-PC	Subject to conditions in Section 1115
Garbage, refuse and rubbish transfer stations		P		Subject to conditions in Section 1152.
Heating and electric power generating plants, and all necessary uses		~~SL-PC~~	SL-PC	
~~Incineration of garbage or refuse when conducted within an approved and enclosed incinerator plant~~		~~P~~		~~Located not less than eight hundred (800) feet distance from any residential district and not less than three hundred (300) feet distant from any other district~~
Junkyards and places for dismantling, wrecking, and disposing or salvaging of the junk and or refuse material of agricultural and automotive vehicles, paper, glass, and other materials of a similar nature, including processing of materials for recycling		~~P~~	SL-PC	Subject to conditions in Section 1137 and Article V, Junkyards, and automobile dismantling, of Chapter 22 of the Charter Township of Ypsilanti Code of Ordinances i
~~Lumber and planing mills~~	~~SL-PC~~	~~SL-PC~~		~~Must be in enclosed building and located in the interior of the district so that no property line shall form the exterior boundary of the zoning district~~
Product Assembly				
Manufacturing and Production	SL-PC	SL-PC	SL-PC	

Industrial Districts Use Table	I-T	L-M	ICR	Notes
P = Permitted Use SL-PC = Special Use Planning Commission Approval SL-TB = Special Use Township Board Approval A = Accessory Use — = Not permitted				
~~Manufacture of corrosive acid or alkali, cement, lime, gypsum, or plaster of Paris.~~		~~P~~	~~P~~	~~Located not less than eight hundred (800) feet distant from any residential district and not less than three hundred (300) feet distant from any other district~~
~~Manufacture of musical instruments, toys, novelties and metal or rubber stamps, or other small, molded rubber products~~	~~SL-PC~~	~~P~~		~~In I-T, must be in enclosed building~~
~~Manufacture of pottery and figurines or other similar ceramic products using only previously pulverized clay, and kilns fired only by electricity or gas~~	~~SL-PC~~	~~P~~		~~In I-T, must be in enclosed building~~
~~Manufacture or assembly of electrical appliances, electronic instruments and devices, radios, and phonographs~~	~~SL-PC~~	~~P~~		~~In I-T, must be in enclosed building~~
~~Manufacture, compounding, assembling or treatment of Articles or merchandise from the following previously prepared materials: bone, canvas, cellophane, cloth, cork, feathers, felt, fiber, fur, glass, hair, horn, leather, paper, plastics, precious or semiprecious metals or stones, sheet metal (excluding large stamping such as: automobile fenders or bodies), shell, textiles, tobacco, wax, wire, wood (excluding saw and planing mills) and yarns.~~	~~SL-PC~~	~~P~~		~~In I-T, must be in enclosed building~~
~~Manufacture, compounding, processing, packaging, or treatment of such products as: bakery goods, candy, cosmetics, pharmaceuticals, toiletries, food products, hardware, and cutlery; tool, die, gauge and machine shops~~	~~SL-PC~~	~~P~~		~~In I-T, must be in enclosed building~~
~~Metal plating, buffing, and polishing~~	~~SL-PC~~	~~SL-PC~~		~~Subject to appropriate measures to control the type of process to prevent noxious results and/or nuisances~~

Industrial Districts Use Table	I-T	L-M	ICR	Notes
P = Permitted Use SL-PC = Special Use Planning Commission Approval SL-TB = Special Use Township Board Approval A = Accessory Use — = Not permitted				
Self-Storage Facilities and storage buildings for lease to the public	~~SL-PC~~	SL-PC	P	Subject to conditions in Section 1134.
Petroleum or other inflammable liquids, production, refining or storage		~~P~~	SL-PC	Located not less than eight hundred (800) feet distant from any residential district and not less than three hundred (300) feet distant from any other district
~~Sand and gravel extraction~~		~~P~~		~~Subject to conditions in Section 1148.~~
~~Smelting of copper, iron, or zinc ore~~		~~P~~		~~Located not less than eight hundred (800) feet distant from any residential district and not less than three hundred (300) feet distant from any other district~~
Last mile logistics and distribution warehouses and uses.		P	P	
Large Scale Customer Fulfillment Centers		P	P	
Laboratories, experimental technology testing facilities.	P	P	P	
Avionic repair and manufacturing including airplanes, helicopters, and drones.		P	P	
~~Green infrastructure and technology~~			~~P~~	
Data centers for the storage and warehousing of computer servers.		P	P	
Outdoor Storage and Contractors/Landscapers Yard	~~P~~	~~P~~SL-PC	SL-PC	Subject to conditions in Section 1157.
~~Open Air Business~~	~~SL-PC~~	~~SL-PC~~		~~Subject to condition is Section 1119.~~
Warehouses and indoor storage	~~P~~	P	P	

Industrial Districts Use Table	I-T	L-M	ICR	Notes
P = Permitted Use SL-PC = Special Use Planning Commission Approval SL-TB = Special Use Township Board Approval A = Accessory Use — = Not permitted				
~~Uses which have an industrial character in terms of either their outdoor storage requirements or activities such as, but not limited to: lumberyard, building materials outlet, upholsterer, cabinetmaker, outdoor boat, house trailer, automobile garage or agricultural implement sales~~	~~SL-PC~~	~~SL-PC~~		
~~Laboratories, experimental, film or testing~~	~~SL-PC~~	~~P~~		~~In I-T, must be in enclosed building~~
Medical laboratories	P	P		
~~Research and development, including laboratories, prototype development and testing facilities, design and pilot or experimental product development~~	~~P~~	~~P~~		~~In I-T, must be in enclosed building~~
Green Industry and Energy				
Green technology research and manufacturing	P	P	P	
Solar Farms		SL-PC	SL-PC	
Green Battery Manufacturing		P	P	
Hydrogen Technology and alternative green fuels		SL-PC	P	
Research and development, including laboratories, prototype development and testing facilities, design and pilot or experimental product development	P	P	P	
Agricultural				
~~Farm operation~~	~~P~~	~~P~~		
Greenhouse and plant material nursery (materials grown and sold on-site)	~~P~~	P	P	
~~Community Supported Agriculture~~	~~SL-PC~~			

Industrial Districts Use Table	I-T	L-M	ICR	Notes
P = Permitted Use SL-PC = Special Use Planning Commission Approval SL-TB = Special Use Township Board Approval A = Accessory Use — = Not permitted				
Office and Financial				
Office buildings	P	P	P	
Data processing and computer centers, including service and maintenance of electronic data processing equipment	P	P	P	
Retail and Services				
Sexually Oriented Businesses			SL-PC	Subject to conditions in Section 1139.
~~Adult/child day care center I preschools~~	~~SL-PC~~			
Commercial kennels/ pet day care	SL-PC	P	P	Subject to conditions in Section 1161
~~Massage therapy~~			~~SL-PC~~	~~Subject to conditions in Section 1140.~~
~~Pawnbroker, secondhand dealer, and junk dealer facilities~~			~~SL-PC~~	~~Subject to conditions in Section 1141.~~
Incidental Sales and Services	A	A	A	Subject to conditions in Section 1132
Tattoo parlor			SL-PC	
Medical Marihuana				
Class A Grower (may grow up to five hundred (500) marijuana plants), Class B Grower (may grow up to one thousand (1,000) marijuana plants), and Class C			P	

Industrial Districts Use Table	I-T	L-M	ICR	Notes
P = Permitted Use SL-PC = Special Use Planning Commission Approval SL-TB = Special Use Township Board Approval A = Accessory Use — = Not permitted				
Grower (may grow up to one thousand-five hundred (1,500) marijuana plants)				
Processor			P	
Safety Compliance Facility			P	
Dispensary			P	
Secure Transporter			P	
Provisioning Center			P	
Microbusiness			P	
Recreational Marihuana				
Class A Marijuana Grower (may grow up to one hundred (100) plants), Class B Marijuana Grower (may grow up to five hundred (500) plants), and Class C Marijuana Grower (may grow up to two thousand (2,000) plants)			P	
Processor			P	
Safety Compliance Facility			P	
Provisioning Center			P	
Secure Transporter			P	
Retailer			P	
Microbusiness			P	
Lodging and Restaurants				
Hotels	P			Subject to condition in Section 1123.
Motels	P			Subject to conditions in Section 1122.

Industrial Districts Use Table	I-T	L-M	ICR	Notes
P = Permitted Use SL-PC = Special Use Planning Commission Approval SL-TB = Special Use Township Board Approval A = Accessory Use — = Not permitted				
Restaurants	P			
Civic/Institutional				
Hospitals	P			
Trade or industrial schools	P	P	P	No outdoor storage
Parole or probation offices			SL-PC	Subject to conditions in Section 1143.
Public/government buildings	P	P	P	
Public utility buildings, excluding wastewater treatment plants	P	P	P	
Transfer and electricity and gas service buildings and yards	P	P	SL-PC	
Wastewater treatment plants			P	Subject to conditions in Section 1154.
Recreation				
Assembly halls, display halls, convention center, theater, or similar places of assembly	SL-PC			Conducted in completely enclosed building
Health clubs, fitness centers, gyms and aerobic clubs, health, and fitness center	SL-PC	SL-PC		Permitted as accessory use only in I-T
Indoor recreational facility, including bowling alley, archery range, tennis/racquet ball court, skating rink, athletic field, swimming pool, and other similar uses	SL-PC	SL-PC		Permitted as accessory use only in I-T. Must be located at least one hundred (100) feet from any front, rear, or side yard of any residential lot in an adjacent residential district. Subject to conditions in Section 1135.
Lighted outdoor commercial sports centers, including baseball and other intense activities		P		Subject to conditions in Section 1153.

Industrial Districts Use Table	I-T	L-M	ICR	Notes
P = Permitted Use SL-PC = Special Use Planning Commission Approval SL-TB = Special Use Township Board Approval A = Accessory Use — = Not permitted				
~~Outdoor spat ball, simulated war games and similar activities~~		~~P~~		~~Subject to conditions in Section 1151.~~
Outdoor theaters		SL-PC	SL-PC	Subject to conditions in Section 1138.
Racetracks (including midget auto and karting tracks) and dirt tracks		~~P~~	SL-PC	Subject to conditions in Section 1150.
Automotive/Transportation				
Airports	~~SL-PC~~	SL-PC	SL-PC	Subject to conditions in Section 1133.
Auto engine and body repair, and undercoating shops	~~SL-PC~~		SL-PC	When conducted in enclosed building
Automobile mechanical component dismantling and recycling			SL-PC	Subject to conditions in Section 1142.
Freight terminals	~~P~~	P	P	
Railroad transfer and storage tracks, railroad rights-of-way	P	P	P	
Railroad lines, rail spurs and similar rail transport access facilities	P	P	P	Subject to conditions in Section 1145.
Accessory Uses				
Accessory buildings and uses customarily incident to any permitted use in this table	A	A	A	
Other				
Wireless communication towers and antennas	See Section 1144.			

(Ord. No. 2018-476 , § 2, 2-20-18)

Article 5 – Sec. 506. – Town Center:

Use groups by category in Town Center

Use Group 2 for the Town center corridors indicates in Use Group 2 *mixed uses: any combination of uses located in group 1, 2, or 3 that is mixed vertically in a building or horizontal on one parcel* is permitted but Use Group 4 (retail, entertainment, and service uses) have been excluded from the mixed-use groups even though Use Group 4 is permitted across all site types. Staff recommends that Use Group 2 for all corridors be corrected to include Use Group 4 in the mixed-uses permitted. **This Zoning Ordinance Text Amendment will be brought to the Planning Commission for the Neighborhood and Regional Corridor in the coming months.** See next page.

Current Zoning Ordinance Language:

2. *Use Groups by Category-Town Center:*

Town Center Corridors
Use Group 1 **Residential Uses:**
One-Family detached and attached dwellings, subject to regulations in Section 1101.
Two-Family dwellings.
Use Group 2 **Misc. Residential/Related Uses:**
Mixed-use. Any combination of uses located in group 1, 2 or 3, that is mixed vertically in a building or horizonal on one (1) parcel.
Multiple-Family dwellings.
Live/Work units.
Child care centers, subject to regulations in Section 1155.
Bed and Breakfast operations, subject to regulations in Section 1107.
Use Group 3 **Office/Institutional:**
Civic Buildings.
Professional and medical office.
Primary/secondary schools (private).
Publicly owned/operated office and service facilities.
Place of worship.
Veterinary clinics or hospitals, subject to regulations in Section 1116 or Section 1117, as applicable.
Use Group 4 **Retail, Entertainment, and Service Uses:**
Financial institutions without a drive-through.
General retail.
Food use without a drive-through.
Personal services.
Business services.
Small group or one-on-one exercise or art studio.

Proposed Text Amendment:

2. *Use Groups by Category-Town Center:*

Town Center Corridors
Use Group 1 **Residential Uses:**
One-Family detached and attached dwellings, subject to regulations in Section 1101.
Two-Family dwellings.
Use Group 2 **Misc. Residential/Related Uses:**
Mixed-use. Any combination of uses located in group 1, 2 3, or 4 that is mixed vertically in a building or horizonal on one (1) parcel.
Multiple-Family dwellings.
Live/Work units.
Child care centers, subject to regulations in Section 1155.
Bed and Breakfast operations, subject to regulations in Section 1107.
Use Group 3 **Office/Institutional:**
Civic Buildings.
Professional and medical office.
Primary/secondary schools (private).
Publicly owned/operated office and service facilities.
Place of worship.
Veterinary clinics or hospitals, subject to regulations in Section 1116 or Section 1117, as applicable.
Use Group 4 **Retail, Entertainment, and Service Uses:**
Financial institutions without a drive-through.
General retail.
Food use without a drive-through.
Personal services.
Business services.
Small group or one-on-one exercise or art studio.

Article 11—Specific Use Provisions Zoning Text Amendments

Section 1128 - Sec. 1128. - Temporary sidewalk, outdoor and tent sales for principal use:

Section 1128 provides for temporary sidewalk, outdoor and tent sales for principal uses, with conditions for all uses specified in paragraph 1. The conditions include following the sign provisions, maneuverability, or safety of the site, and following all other township requirements. However, there is no provision for parking requirements that apply to all uses; parking requirements are addressed only under paragraph 2, Seasonal sales of produce from tents, stands or display racks. Parking should be a consideration for all temporary sales uses.

Staff recommends that the parking requirements under paragraph 2 be moved to paragraph 1, thereby applying to all uses under Section 1128.

Sec. 1128. - Temporary sidewalk, outdoor and tent sales for principal use:

Temporary sidewalk, outdoor and tent sales may be permitted subject to the issuance of a revocable Zoning Compliance permit to operate a sidewalk, outdoor or tent sales as an extension of or compatible with, the existing business on a portion of the public sidewalk or other public area adjacent to the business. The Zoning Compliance permit may be issued by the Zoning Administrator under the following terms and conditions:

1. For all uses, the following conditions must be met:
    A. Signs shall be limited to sizes and locations in keeping with Article 15.
    B. All temporary buildings, tents and structures shall be constructed, used, occupied, and maintained in compliance with the provisions of the state construction code and all Ordinances of the Township.
    C. Building and Fire Code requirements shall be complied with.
    D. The sale shall not interfere with the use of the sidewalk or street for pedestrian or vehicular travel. Sidewalk width must remain at least six (6) feet wide.
    E. The sale shall not unreasonably interfere with the view of, access to or use of property adjacent to the street or neighboring businesses or properties.
    F. The sale shall not interfere with street clearing or snow removal activities.
    G. The sale shall not cause damage to the street or to sidewalks, trees, benches, landscaping, or other objects lawfully located on the property.
    H. Sales areas shall be located so as to provide adequate access for fire and safety vehicles.
    I. A permit shall be required. The proprietor of the property shall provide a sketch plan drawn to scale showing the location of the sale, existing and proposed temporary and permanent structures on the entire parcel, parking areas, and parking calculations.
    J. Copies of permits required by any other agencies for the use must be included with the permit application.

K. Off-street parking shall be provided in keeping with standards of Section 1205, Parking requirements. In those instances where usable floor area cannot be effectively measured, the sales space utilized shall be measured as usable floor area.

2. Seasonal sale of produce from tents, stands or display racks subject to the following conditions:

   A. Permits may be issued for up to six (6) month periods.

   ~~B. Off-street parking shall be provided in keeping with standards of Section 1205, Parking requirements. In those instances where usable floor area cannot be effectively measured, the sales space utilized shall be measured as usable floor area.~~

3. Sidewalk sales areas may be permitted subject to the following:

   A. The sidewalk sales area shall abut the building and shall not be placed abutting a parking area or vehicle travel lane.

   B. Sidewalk sales areas shall not be fenced or enclosed in any manner.

   C. Sidewalk sales shall be conducted for no more than fourteen (14) consecutive days and permits shall not be issued for consecutive tent sales beyond a fourteen (14) day period.

4. Tent sales may be permitted subject to the following:

   A. No more than three (3) tent sales shall be permitted for a business location within a single calendar year.

   B. A tent sale shall be conducted for no more than fourteen (14) consecutive days and permits shall not be issued for consecutive tent sales beyond a fourteen (14) day period.

   C. Tent sales when proposed to be conducted on parking areas shall not reduce required parking spaces by more than fifteen percent (15%).

   D. All tents shall be removed within forty-eight (48) hours of expiration of the period for which the permit is issued.

   E. Equipment and products used in the event do not pose a fire or other hazard.

Article 13 Zoning Text Amendments

A. Section 1305 – Fences and Walls

Section 1305.2.A.(1) specifies that *"Only ornamental type fences shall be located in a required front yard or, in the case of a corner or through lot, in a required yard which adjoins a public or private street provided such fences shall not exceed four (4) feet in height."*

However, the illustration included in this section reflects the previous zoning ordinance provisions allowing a six-foot privacy fence in the required yard adjoining a public or private street in certain situations. The illustration should be corrected to show that a privacy fence must meet the required front yard setback along both street frontages.

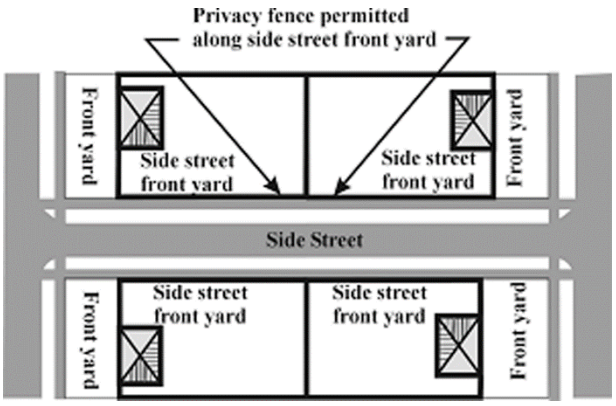

B. Section 1305 – Fences and Walls

A through lot is defined by the Ordinance as "*Lot, Through: Any interior lot having frontage on two (2) more or less parallel streets as distinguished from a corner lot. In the case of a row of double frontage lots, all yards of said lots adjacent to streets shall be considered frontage, and front yard setbacks shall be provided as required."*

Section 1305.2.A.(1) specifies that *"Only ornamental type fences shall be located in a required front yard or, in the case of a corner or through lot, in a required yard which adjoins a public or private street provided such fences shall not exceed four (4) feet in height."* A six-foot tall fence must meet the rear yard setback of 35 feet on a through lot, which could substantially decrease the usable rear yard of a through lot.

Staff recommends that the ordinance be changed to read as follows:

2. Height and location requirements:

A. Residential District.

(1) Only ornamental type fences shall be located in a required front yard or, in the case of a corner ~~or through lot~~, in a required yard which adjoins a public or private street provided such fences shall not exceed four (4) feet in height.

(2) Fences may be located in any required yard not adjoining a public or private street provided that they shall not exceed six (6) feet in height. In the case of a through lot, fences between four and six feet in height located in the secondary front yard shall maintain a ten (10) foot setback.

Article 15 – Signs

Section 1509.6.A.2.b. – Permitted Signs in Form-based Districts.

The area of wall signs permitted for a multi-tenant building in the form-based district is indicated as *per lot* but that would mean individual tenants would be left without any wall signs. Staff suggests that the language be amended to read as follows:

(b) Area. The area of wall signs permitted for each ~~lot~~ unit shall be determined as one (1) square foot of sign area for each one (1) linear foot of building frontage occupied by a business to a maximum area of one hundred (100) square feet. All businesses without ground floor frontage, in a given building, shall be permitted one (1) combined exterior wall sign not more than twenty-four (24) square feet in area.

Section 1509.10. – Prohibited Signs

The zoning ordinance does not address signs painted directly onto a building façade as a wall sign. Staff suggests the following language:

H. No sign shall be painted directly onto the façade of the building wall or related architectural feature.

Township Supervisor
Brenda L. Stumbo
Township Clerk
Heather Jarrell Roe
Township Treasurer
Stan Eldridge

YPSILANTI TOWNSHIP
— PLANNING & ZONING DEPARTMENT —

Trustees
John Newman II
Gloria Peterson
Debbie Swanson
Ryan Hunter

Staff Report
Zoning Ordinance Text Amendments

July 25, 2023

RE: Public Hearing: Zoning Ordinance Text Amendments

Since the Zoning Ordinance went into effect on **March 4, 2022**, staff has found errors, omissions, and corrections that need to be addressed with zoning text amendments. The proposed ordinance language changes are either indicated in red in the following report or, for the sake of clarity, the entire Article is attached. The following Sections of the Zoning Ordinance are under consideration for Zoning Text Amendments:

- Article 4, Section 407. – Residential multiple-family: low density.
- Article 4, Section 408. – Residential multiple-family: medium density.
- Article 4, Section 409. – Residential multiple-family: high density.
- Article 4, Section 420. – Residential use table.
- Article 5, Section 506. – Town Center
- Article 11, Section 1128. – Temporary sidewalk, outdoor and tent sales for principal use.
- Article 13, Section 1305. – Fences and walls.
- Article 15, Section 1509. – Signs.

Article 4 – District Regulations Zoning Text Amendments

Sections 407, 408, and 409 – Residential Multiple-Family Districts

Single-family residential uses are permitted in the three residential multiple-family districts (RM-LD, RM-MD, and RM-HD) but the dimensional requirements do not contemplate setbacks for single-family residential uses, only multiple-family residential uses. Requiring a single-family residential dwelling to comply with the required 60-foot aggregate side yard setback, for example, of the RM-LD district makes most typical platted subdivision lots unbuildable except for variance approval. On October 5, 2022, staff brought before the Zoning Board of Appeals a request by Habitat for Humanity to seek a variance from Sec. 407 due to the inability for them to meet the aggregate 60-foot side yard setback requirement on a RM-LD lot located at 966 N. Prospect. The lot was only 51' wide rendering the construction of a single-family home unobtainable. If this Zoning Text Amendment was in effect at the time, Habitat for Humanity could simply use the dimensional standards of the most similar single-family lot, in this case, a R-5 One-Family Residential lot. **Staff recommends the following language be included in the supplemental district standards for all three multiple-family districts:**

The expansion or construction of a single-family dwelling or accessory structure shall conform with the applicable minimum yard and setback requirements of the most comparable single-family zoning district.

Township Supervisor
Brenda L. Stumbo
Township Clerk
Heather Jarrell Roe
Township Treasurer
Stan Eldridge

YPSILANTI TOWNSHIP
— PLANNING & ZONING DEPARTMENT —

Trustees
John Newman II
Gloria Peterson
Debbie Swanson
Ryan Hunter

Sec. 407. - Residential multiple-family: low density:

1. *Intent:* The intent is to provide sites for low-density multiple-family dwelling structures, and related uses.
2. *Use regulations:* Section 420 sets forth permitted, accessory and special land uses within the RM-LD residential district.
3. *Dimensional requirements:* The following dimensional requirements shall apply to the RM-LD residential district.

Min. Lot Size		Max. Lot Coverage (all buildings)	Max. Height		Min. Yards & Setbacks in feet			
in acres	Width in feet		Stories	Feet	Front	Side		Rear
						Least	Total	
1 or 3[1]	80	25%	3	35	30	30	60	30

[1] Minimum total lot area of one (1) acre for residential use with a minimum lot area of seven thousand two hundred (7,200) square feet per dwelling unit, and minimum lot area of three (3) acres for non-residential uses

4. *Supplemental district standards:*

   A. In addition to those bulk regulations listed in Section 407.3, all development shall conform to supplemental bulk regulations listed in Section 419.

   B. The following minimum dwelling unit size requirements shall apply to the RM-MD residential districts

Efficiency	1 Bedroom	2 Bedroom	3 Bedroom	4+ Bedroom
350 sq. ft.	500 sq. ft.	700 sq. ft.	900 sq. ft.	1,100 sq. ft.

   C. The expansion or construction of a single-family dwelling or accessory structure shall conform with the applicable minimum yard and setback requirements of the most comparable single-family zoning district.

Township Supervisor
Brenda L. Stumbo
Township Clerk
Heather Jarrell Roe
Township Treasurer
Stan Eldridge

Trustees
John Newman II
Gloria Peterson
Debbie Swanson
Ryan Hunter

Sec. 408. - Residential multiple-family: medium density:

1. *Intent:* The intent is to provide sites for medium-density multiple-family dwelling structures, and related uses.
2. *Use regulations:* Section 420 sets forth permitted, accessory and special land uses within the RM-MD residential district.

3. *Dimensional requirements:* The following dimensional requirements shall apply to the RM-MD residential districts.

Min. Lot Size		Max. Lot Coverage (all buildings)	Max. Height		Min. Yards & Setbacks in feet			
						Side		
in acres	Width in feet		Stories	Feet	Front	Least	Total	Rear
1 or 3[1]	100	15%	4	45	40	40	80	50

[1] Minimum total lot area of one (1) acre for residential use with a minimum lot area of seven thousand two hundred (7,200) square feet per dwelling unit, and minimum lot area of three (3) acres for non-residential uses.

4. *Supplemental district standards:*

A. In addition to those bulk regulations listed in Section 408.3, all development shall conform to supplemental bulk regulations listed in Section 419.

B. The following minimum dwelling unit size requirements shall apply to the RM-MD residential districts

Efficiency	1 Bedroom	2 Bedroom	3 Bedroom	4+ Bedroom
350 sq. ft.	500 sq. ft.	700 sq. ft.	900 sq. ft.	1,100 sq. ft.

C. The expansion or construction of a single-family dwelling or accessory structure shall conform with the applicable minimum yard and setback requirements of the most comparable single-family zoning district.

Sec. 409. - Residential multiple-family: high density:

1. *Intent:* The intent is to provide sites for high-density multiple-family dwelling structures, and related uses.
2. *Use regulations:* Section 420 sets forth permitted, accessory and special land uses within the RM-HD residential district.
3. *Dimensional requirements:* The following dimensional requirements shall apply to the RM-HD residential districts.

Min. Lot Size		Max. Lot Coverage (all buildings)	Max. Height		Min. Yards & Setbacks in feet			
in acres	Width in feet		Stories	Feet	Front	Side		Rear
						Least	Total	
1 or 3[1]	150	15%	8	85	50	50	100	50

[1] Minimum total lot area of one (1) acre for residential use with a minimum lot area of seven thousand two hundred (7,200) square feet per dwelling unit, and minimum lot area of three (3) acres for non-residential uses

4. *Supplemental district standards:*

A. In addition to those bulk regulations listed in Section 409.3, all development shall conform to supplemental bulk regulations listed in Section 419.

B. The following minimum dwelling unit size requirements shall apply to the RM-H residential districts:

Efficiency	1 Bedroom	2 Bedroom	3 Bedroom	4+ Bedroom
350 sq. ft.	500 sq. ft.	700 sq. ft.	900 sq. ft.	1,100 sq. ft.

C. The expansion or construction of a single-family dwelling or accessory structure shall conform with the applicable minimum yard and setback requirements of the most comparable single-family zoning district.

Article 4, Section 420 – Residential Use Table

Staff suggests amending the industrial schedule of uses to provide for uses more in line with the Master Plan, industrial users that are currently operating in the township, and uses more aligned with today's economic trends. Please find below the proposed changes:

Article 4 – District Regulations

Industrial Districts Use Table	I-T	L-M	ICR	Notes
P = Permitted Use SL-PC = Special Use Planning Commission Approval SL-TB = Special Use Township Board Approval A = Accessory Use — = Not permitted				
Blast furnace, steel furnace, blooming or rolling mill		P		Located not less than eight hundred (800) feet distance from any residential district and not less than three hundred (300) feet distant from any other district
Central dry-cleaning plant, service to more than one facility	P	P		
Crematorium		~~SL-PC~~	SL-PC	Subject to conditions in Section 1115
Garbage, refuse and rubbish transfer stations		P		Subject to conditions in Section 1152.
Heating and electric power generating plants, and all necessary uses		~~SL-PC~~	SL-PC	
~~Incineration of garbage or refuse when conducted within an approved and enclosed incinerator plant~~		~~P~~		~~Located not less than eight hundred (800) feet distance from any residential district and not less than three hundred (300) feet distant from any other district~~
Junkyards and places for dismantling, wrecking, and disposing or salvaging of the junk and or refuse material of agricultural and automotive vehicles, paper, glass, and other materials of a similar nature, including processing of materials for recycling		~~P~~	SL-PC	Subject to conditions in Section 1137 and Article V, Junkyards, and automobile dismantling, of Chapter 22 of the Charter Township of Ypsilanti Code of Ordinances i
~~Lumber and planing mills~~	~~SL-PC~~	~~SL-PC~~		~~Must be in enclosed building and located in the interior of the district so that no property line shall form the exterior boundary of the zoning district~~
Product Assembly				
Manufacturing and Production	SL-PC	SL-PC	SL-PC	

Township Supervisor
Brenda L. Stumbo
Township Clerk
Heather Jarrell Roe
Township Treasurer
Stan Eldridge

Trustees
John Newman II
Gloria Peterson
Debbie Swanson
Ryan Hunter

Industrial Districts Use Table	I-T	L-M	ICR	Notes
P = Permitted Use SL-PC = Special Use Planning Commission Approval SL-TB = Special Use Township Board Approval A = Accessory Use — = Not permitted				
~~Manufacture of corrosive acid or alkali, cement, lime, gypsum, or plaster of Paris.~~		~~P~~	~~P~~	~~Located not less than eight hundred (800) feet distant from any residential district and not less than three hundred (300) feet distant from any other district~~
~~Manufacture of musical instruments, toys, novelties and metal or rubber stamps, or other small, molded rubber products~~	~~SL-PC~~	~~P~~		~~In I-T, must be in enclosed building~~
~~Manufacture of pottery and figurines or other similar ceramic products using only previously pulverized clay, and kilns fired only by electricity or gas~~	~~SL-PC~~	~~P~~		~~In I-T, must be in enclosed building~~
~~Manufacture or assembly of electrical appliances, electronic instruments and devices, radios, and phonographs~~	~~SL-PC~~	~~P~~		~~In I-T, must be in enclosed building~~
~~Manufacture, compounding, assembling or treatment of Articles or merchandise from the following previously prepared materials: bone, canvas, cellophane, cloth, cork, feathers, felt, fiber, fur, glass, hair, horn, leather, paper, plastics, precious or semiprecious metals or stones, sheet metal (excluding large stamping such as: automobile fenders or bodies), shell, textiles, tobacco, wax, wire, wood (excluding saw and planing mills) and yarns.~~	~~SL-PC~~	~~P~~		~~In I-T, must be in enclosed building~~
~~Manufacture, compounding, processing, packaging, or treatment of such products as: bakery goods, candy, cosmetics, pharmaceuticals, toiletries, food products, hardware, and cutlery; tool, die, gauge and machine shops~~	~~SL-PC~~	~~P~~		~~In I-T, must be in enclosed building~~
~~Metal plating, buffing, and polishing~~	~~SL-PC~~	~~SL-PC~~		~~Subject to appropriate measures to control the type of process to prevent noxious results and/or nuisances~~

Township Supervisor
Brenda L. Stumbo
Township Clerk
Heather Jarrell Roe
Township Treasurer
Stan Eldridge

Trustees
John Newman II
Gloria Peterson
Debbie Swanson
Ryan Hunter

Industrial Districts Use Table	I-T	L-M	ICR	Notes
P = Permitted Use SL-PC = Special Use Planning Commission Approval SL-TB = Special Use Township Board Approval A = Accessory Use — = Not permitted				
Self-Storage Facilities and storage buildings for lease to the public	~~SL-PC~~	SL-PC	P	Subject to conditions in Section 1134.
Petroleum or other inflammable liquids, production, refining or storage		~~P~~	SL-PC	Located not less than eight hundred (800) feet distant from any residential district and not less than three hundred (300) feet distant from any other district
~~Sand and gravel extraction~~		~~P~~		~~Subject to conditions in Section 1148.~~
~~Smelting of copper, iron, or zinc ore~~		~~P~~		~~Located not less than eight hundred (800) feet distant from any residential district and not less than three hundred (300) feet distant from any other district~~
Last mile logistics and distribution warehouses and uses.		P	P	
Large Scale Customer Fulfillment Centers		P	P	
Laboratories, experimental technology testing facilities.	P	P	P	
Avionic repair and manufacturing including airplanes, helicopters, and drones.		P	P	
~~Green infrastructure and technology~~			~~P~~	
Data centers for the storage and warehousing of computer servers.		P	P	
Outdoor Storage and Contractors/Landscapers Yard	~~P~~	~~P~~SL-PC	SL-PC	Subject to conditions in Section 1157.
~~Open Air Business~~	~~SL-PC~~	~~SL-PC~~		~~Subject to condition is Section 1119.~~
Warehouses and indoor storage	~~P~~	P	P	

Township Supervisor
Brenda L. Stumbo
Township Clerk
Heather Jarrell Roe
Township Treasurer
Stan Eldridge

Trustees
John Newman II
Gloria Peterson
Debbie Swanson
Ryan Hunter

Industrial Districts Use Table	I-T	L-M	ICR	Notes
P = Permitted Use SL-PC = Special Use Planning Commission Approval SL-TB = Special Use Township Board Approval A = Accessory Use — = Not permitted				
~~Uses which have an industrial character in terms of either their outdoor storage requirements or activities such as, but not limited to: lumberyard, building materials outlet, upholsterer, cabinetmaker, outdoor boat, house trailer, automobile garage or agricultural implement sales~~	~~SL-PC~~	~~SL-PC~~		
~~Laboratories, experimental, film or testing~~	~~SL-PC~~	~~P~~		~~In I-T, must be in enclosed building~~
Medical laboratories	P	P		
~~Research and development, including laboratories, prototype development and testing facilities, design and pilot or experimental product development~~	~~P~~	~~P~~		~~In I-T, must be in enclosed building~~
Green Industry and Energy				
Green technology research and manufacturing	P	P	P	
Solar Farms		SL-PC	SL-PC	
Green Battery Manufacturing		P	P	
Hydrogen Technology and alternative green fuels		SL-PC	P	
Research and development, including laboratories, prototype development and testing facilities, design and pilot or experimental product development	P	P	P	
Agricultural				
~~Farm operation~~	~~P~~	~~P~~		
Greenhouse and plant material nursery (materials grown and sold on-site)	~~P~~	P	P	
~~Community Supported Agriculture~~	~~SL-PC~~			

Township Supervisor
Brenda L. Stumbo
Township Clerk
Heather Jarrell Roe
Township Treasurer
Stan Eldridge

Trustees
John Newman II
Gloria Peterson
Debbie Swanson
Ryan Hunter

Industrial Districts Use Table	I-T	L-M	ICR	Notes
P = Permitted Use SL-PC = Special Use Planning Commission Approval SL-TB = Special Use Township Board Approval A = Accessory Use — = Not permitted				
Office and Financial				
Office buildings	P	P	P	
Data processing and computer centers, including service and maintenance of electronic data processing equipment	P	P	P	
Retail and Services				
Sexually Oriented Businesses			SL-PC	Subject to conditions in Section 1139.
~~Adult/child day care center + preschools~~	~~SL-PC~~			
Commercial kennels/ pet day care	SL-PC	P	P	Subject to conditions in Section 1161
~~Massage therapy~~			~~SL-PC~~	~~Subject to conditions in Section 1140.~~
~~Pawnbroker, secondhand dealer, and junk dealer facilities~~			~~SL-PC~~	~~Subject to conditions in Section 1141.~~
Incidental Sales and Services	A	A	A	Subject to conditions in Section 1132
Tattoo parlor			SL-PC	
Medical Marihuana				
Class A Grower (may grow up to five hundred (500) marijuana plants), Class B Grower (may grow up to one thousand (1,000) marijuana plants), and Class C			P	

Township Supervisor
Brenda L. Stumbo
Township Clerk
Heather Jarrell Roe
Township Treasurer
Stan Eldridge

Trustees
John Newman II
Gloria Peterson
Debbie Swanson
Ryan Hunter

Industrial Districts Use Table	I-T	L-M	ICR	Notes
P = Permitted Use SL-PC = Special Use Planning Commission Approval SL-TB = Special Use Township Board Approval A = Accessory Use — = Not permitted				
Grower (may grow up to one thousand-five hundred (1,500) marijuana plants)				
Processor			P	
Safety Compliance Facility			P	
Dispensary			P	
Secure Transporter			P	
Provisioning Center			P	
Microbusiness			P	
Recreational Marihuana				
Class A Marijuana Grower (may grow up to one hundred (100) plants), Class B Marijuana Grower (may grow up to five hundred (500) plants), and Class C Marijuana Grower (may grow up to two thousand (2,000) plants)			P	
Processor			P	
Safety Compliance Facility			P	
Provisioning Center			P	
Secure Transporter			P	
Retailer			P	
Microbusiness			P	
Lodging and Restaurants				
Hotels	P			Subject to condition in Section 1123.
Motels	P			Subject to conditions in Section 1122.

Township Supervisor
Brenda L. Stumbo
Township Clerk
Heather Jarrell Roe
Township Treasurer
Stan Eldridge

Trustees
John Newman II
Gloria Peterson
Debbie Swanson
Ryan Hunter

Industrial Districts Use Table	I-T	L-M	ICR	Notes
P = Permitted Use SL-PC = Special Use Planning Commission Approval SL-TB = Special Use Township Board Approval A = Accessory Use — = Not permitted				
Restaurants	P			
Civic/Institutional				
Hospitals	P			
Trade or industrial schools	P	P	P	No outdoor storage
Parole or probation offices			SL-PC	Subject to conditions in Section 1143.
Public/government buildings	P	P	P	
Public utility buildings, excluding wastewater treatment plants	P	P	P	
Transfer and electricity and gas service buildings and yards	P	P	SL-PC	
Wastewater treatment plants			P	Subject to conditions in Section 1154.
Recreation				
Assembly halls, display halls, convention center, theater, or similar places of assembly	SL-PC			Conducted in completely enclosed building
Health clubs, fitness centers, gyms and aerobic clubs, health, and fitness center	SL-PC	SL-PC		Permitted as accessory use only in I-T
Indoor recreational facility, including bowling alley, archery range, tennis/racquet ball court, skating rink, athletic field, swimming pool, and other similar uses	SL-PC	SL-PC		Permitted as accessory use only in I-T. Must be located at least one hundred (100) feet from any front, rear, or side yard of any residential lot in an adjacent residential district. Subject to conditions in Section 1135.
Lighted outdoor commercial sports centers, including baseball and other intense activities		P		Subject to conditions in Section 1153.

Industrial Districts Use Table	I-T	L-M	ICR	Notes
P = Permitted Use SL-PC = Special Use Planning Commission Approval SL-TB = Special Use Township Board Approval A = Accessory Use — = Not permitted				
~~Outdoor spat ball, simulated war games and similar activities~~		~~P~~		~~Subject to conditions in Section 1151.~~
Outdoor theaters		SL-PC	SL-PC	Subject to conditions in Section 1138.
Racetracks (including midget auto and karting tracks) and dirt tracks		~~P~~	SL-PC	Subject to conditions in Section 1150.
Automotive/Transportation				
Airports	~~SL-PC~~	SL-PC	SL-PC	Subject to conditions in Section 1133.
Auto engine and body repair, and undercoating shops	~~SL-PC~~		SL-PC	When conducted in enclosed building
Automobile mechanical component dismantling and recycling			SL-PC	Subject to conditions in Section 1142.
Freight terminals	~~P~~	P	P	
Railroad transfer and storage tracks, railroad rights-of-way	P	P	P	
Railroad lines, rail spurs and similar rail transport access facilities	P	P	P	Subject to conditions in Section 1145.
Accessory Uses				
Accessory buildings and uses customarily incident to any permitted use in this table	A	A	A	
Other				
Wireless communication towers and antennas	See Section 1144.			

(Ord. No. 2018-476 , § 2, 2-20-18)

Article 5 – Sec. 506. – Town Center:

Use groups by category in Town Center

Use Group 2 for the Town center corridors indicates in Use Group 2 *mixed uses: any combination of uses located in group 1, 2, or 3 that is mixed vertically in a building or horizontal on one parcel* is permitted but Use Group 4 (retail, entertainment, and service uses) have been excluded from the mixed-use groups even though Use Group 4 is permitted across all site types. Staff recommends that Use Group 2 for all corridors be corrected to include Use Group 4 in the mixed-uses permitted. **This Zoning Ordinance Text Amendment will be brought to the Planning Commission for the Neighborhood and Regional Corridor in the coming months.** See next page.

Current Zoning Ordinance Language:

2. *Use Groups by Category-Town Center:*

Town Center Corridors
Use Group 1 **Residential Uses:**
One-Family detached and attached dwellings, subject to regulations in Section 1101.
Two-Family dwellings.
Use Group 2 **Misc. Residential/Related Uses:**
Mixed-use. Any combination of uses located in group 1, 2 or 3, that is mixed vertically in a building or horizonal on one (1) parcel.
Multiple-Family dwellings.
Live/Work units.
Child care centers, subject to regulations in Section 1155.
Bed and Breakfast operations, subject to regulations in Section 1107.
Use Group 3 **Office/Institutional:**
Civic Buildings.
Professional and medical office.
Primary/secondary schools (private).
Publicly owned/operated office and service facilities.
Place of worship.
Veterinary clinics or hospitals, subject to regulations in Section 1116 or Section 1117, as applicable.
Use Group 4 **Retail, Entertainment, and Service Uses:**
Financial institutions without a drive-through.
General retail.
Food use without a drive-through.
Personal services.
Business services.
Small group or one-on-one exercise or art studio.

Proposed Text Amendment:

2. *Use Groups by Category-Town Center:*

Town Center Corridors
Use Group 1 **Residential Uses:**
One-Family detached and attached dwellings, subject to regulations in Section 1101.
Two-Family dwellings.
Use Group 2 **Misc. Residential/Related Uses:**
Mixed-use. Any combination of uses located in group 1, 2 3, or 4 that is mixed vertically in a building or horizonal on one (1) parcel.
Multiple-Family dwellings.
Live/Work units.
Child care centers, subject to regulations in Section 1155.
Bed and Breakfast operations, subject to regulations in Section 1107.
Use Group 3 **Office/Institutional:**
Civic Buildings.
Professional and medical office.
Primary/secondary schools (private).
Publicly owned/operated office and service facilities.
Place of worship.
Veterinary clinics or hospitals, subject to regulations in Section 1116 or Section 1117, as applicable.
Use Group 4 **Retail, Entertainment, and Service Uses:**
Financial institutions without a drive-through.
General retail.
Food use without a drive-through.
Personal services.
Business services.
Small group or one-on-one exercise or art studio.

Article 11—Specific Use Provisions Zoning Text Amendments

Section 1128 - Sec. 1128. - Temporary sidewalk, outdoor and tent sales for principal use:

Section 1128 provides for temporary sidewalk, outdoor and tent sales for principal uses, with conditions for all uses specified in paragraph 1. The conditions include following the sign provisions, maneuverability, or safety of the site, and following all other township requirements. However, there is no provision for parking requirements that apply to all uses; parking requirements are addressed only under paragraph 2, Seasonal sales of produce from tents, stands or display racks. Parking should be a consideration for all temporary sales uses.

Staff recommends that the parking requirements under paragraph 2 be moved to paragraph 1, thereby applying to all uses under Section 1128.

Sec. 1128. - Temporary sidewalk, outdoor and tent sales for principal use:

Temporary sidewalk, outdoor and tent sales may be permitted subject to the issuance of a revocable Zoning Compliance permit to operate a sidewalk, outdoor or tent sales as an extension of or compatible with, the existing business on a portion of the public sidewalk or other public area adjacent to the business. The Zoning Compliance permit may be issued by the Zoning Administrator under the following terms and conditions:

1. For all uses, the following conditions must be met:
    A. Signs shall be limited to sizes and locations in keeping with Article 15.
    B. All temporary buildings, tents and structures shall be constructed, used, occupied, and maintained in compliance with the provisions of the state construction code and all Ordinances of the Township.
    C. Building and Fire Code requirements shall be complied with.
    D. The sale shall not interfere with the use of the sidewalk or street for pedestrian or vehicular travel. Sidewalk width must remain at least six (6) feet wide.
    E. The sale shall not unreasonably interfere with the view of, access to or use of property adjacent to the street or neighboring businesses or properties.
    F. The sale shall not interfere with street clearing or snow removal activities.
    G. The sale shall not cause damage to the street or to sidewalks, trees, benches, landscaping, or other objects lawfully located on the property.
    H. Sales areas shall be located so as to provide adequate access for fire and safety vehicles.
    I. A permit shall be required. The proprietor of the property shall provide a sketch plan drawn to scale showing the location of the sale, existing and proposed temporary and permanent structures on the entire parcel, parking areas, and parking calculations.

J. Copies of permits required by any other agencies for the use must be included with the permit application.

K. Off-street parking shall be provided in keeping with standards of Section 1205, Parking requirements. In those instances where usable floor area cannot be effectively measured, the sales space utilized shall be measured as usable floor area.

2. Seasonal sale of produce from tents, stands or display racks subject to the following conditions:

   A. Permits may be issued for up to six (6) month periods.

   ~~B. Off-street parking shall be provided in keeping with standards of Section 1205, Parking requirements. In those instances where usable floor area cannot be effectively measured, the sales space utilized shall be measured as usable floor area.~~

3. Sidewalk sales areas may be permitted subject to the following:

   A. The sidewalk sales area shall abut the building and shall not be placed abutting a parking area or vehicle travel lane.

   B. Sidewalk sales areas shall not be fenced or enclosed in any manner.

   C. Sidewalk sales shall be conducted for no more than fourteen (14) consecutive days and permits shall not be issued for consecutive tent sales beyond a fourteen (14) day period.

4. Tent sales may be permitted subject to the following:

   A. No more than three (3) tent sales shall be permitted for a business location within a single calendar year.

   B. A tent sale shall be conducted for no more than fourteen (14) consecutive days and permits shall not be issued for consecutive tent sales beyond a fourteen (14) day period.

   C. Tent sales when proposed to be conducted on parking areas shall not reduce required parking spaces by more than fifteen percent (15%).

   D. All tents shall be removed within forty-eight (48) hours of expiration of the period for which the permit is issued.

   E. Equipment and products used in the event do not pose a fire or other hazard.

Article 13 Zoning Text Amendments

A. Section 1305 – Fences and Walls

Section 1305.2.A.(1) specifies that *"Only ornamental type fences shall be located in a required front yard or, in the case of a corner or through lot, in a required yard which adjoins a public or private street provided such fences shall not exceed four (4) feet in height."*

However, the illustration included in this section reflects the previous zoning ordinance provisions allowing a six-foot privacy fence in the required yard adjoining a public or private street in certain

situations. The illustration should be corrected to show that a privacy fence must meet the required front yard setback along both street frontages.

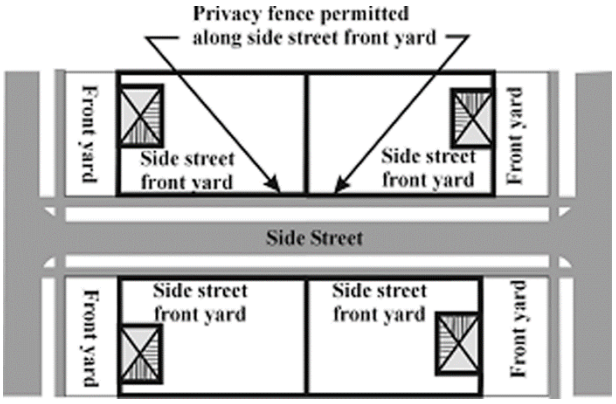

B. Section 1305 – Fences and Walls

A through lot is defined by the Ordinance as "*Lot, Through: Any interior lot having frontage on two (2) more or less parallel streets as distinguished from a corner lot. In the case of a row of double frontage lots, all yards of said lots adjacent to streets shall be considered frontage, and front yard setbacks shall be provided as required.*"

Section 1305.2.A.(1) specifies that *"Only ornamental type fences shall be located in a required front yard or, in the case of a corner or through lot, in a required yard which adjoins a public or private street provided such fences shall not exceed four (4) feet in height."* A six-foot tall fence must meet the rear yard setback of 35 feet on a through lot, which could substantially decrease the usable rear yard of a through lot.

Staff recommends that the ordinance be changed to read as follows:

2. Height and location requirements:

A. Residential District.

(1) Only ornamental type fences shall be located in a required front yard or, in the case of a corner ~~or through lot~~, in a required yard which adjoins a public or private street provided such fences shall not exceed four (4) feet in height.

(2) Fences may be located in any required yard not adjoining a public or private street provided that they shall not exceed six (6) feet in height. In the case of a through lot, fences between four and six feet in height located in the secondary front yard shall maintain a ten (10) foot setback.

Article 15 – Signs

Section 1509.6.A.2.b. – Permitted Signs in Form-based Districts.

The area of wall signs permitted for a multi-tenant building in the form-based district is indicated as *per lot* but that would mean individual tenants would be left without any wall signs. Staff suggests that the language be amended to read as follows:

(b) Area. The area of wall signs permitted for each ~~lot~~ unit shall be determined as one (1) square foot of sign area for each one (1) linear foot of building frontage occupied by a business to a maximum area of one hundred (100) square feet. All businesses without ground floor frontage, in a given building, shall be permitted one (1) combined exterior wall sign not more than twenty-four (24) square feet in area.

Section 1509.10. – Prohibited Signs

The zoning ordinance does not address signs painted directly onto a building façade as a wall sign. Staff suggests the following language:

H. No sign shall be painted directly onto the façade of the building wall or related architectural feature.

Township Supervisor
Brenda L. Stumbo
Township Clerk
Heather Jarrell Roe
Township Treasurer
Stan Eldridge

YPSILANTI TOWNSHIP
— PLANNING & ZONING DEPARTMENT —

Trustees
John Newman II
Gloria Peterson
Debbie Swanson
Ryan Hunter

Memorandum

To: Board of Trustees

From: Fletcher Reyher, Planning and Development Coordinator

Date: August 9, 2023

Re: First Reading: Ordinance 2023-XXX to amend Article 4, Section 407. – Residential Multiple-Family: Low Density.

On July 25, 2023, the Charter Township of Ypsilanti Planning Commission held a public hearing to consider a Zoning ordinance text amendment to Article 4, Section 407. – Residential Multiple-Family: Low Density.

During the public hearing, there were no public comments received by the Planning Commission in response to the proposed zoning ordinance amendment. The Planning Commission field the following motion recommending approval of the proposed amendment to the Township Board of Trustees:

A motion was made by Commissioner Tawakkul, supported by Commissioner Doe to approve the zoning ordinance text amendment, amending Article 4, Section 407. – Residential Multiple-Family: Low Density and forward the recommendation to the Charter Township of Ypsilanti Board of Trustees for consideration.

The motion carried unanimously.

A copy of the staff report to the Planning Commission summarizing the proposed zoning text changes is enclosed for reference.

Staff respectfully requests the Board approve the first reading of Ordinance 2023-XXX amending Zoning Ordinance Article 4, Section 407 – Residential Multiple-Family: Low Density.

If any questions, concerns, or comments arise relating to the proposed amendment, please do not hesitate to contact me.

Township Supervisor
Brenda L. Stumbo
Township Clerk
Heather Jarrell Roe
Township Treasurer
Stan Eldridge

YPSILANTI TOWNSHIP
— PLANNING & ZONING DEPARTMENT —

Trustees
John Newman II
Gloria Peterson
Debbie Swanson
Ryan Hunter

Memorandum

To: Board of Trustees

From: Fletcher Reyher, Planning and Development Coordinator

Date: August 9, 2023

Re: First Reading: Ordinance 2023-XXX to amend Article 4, Section 408. – Residential Multiple-Family: Medium Density.

On July 25, 2023, the Charter Township of Ypsilanti Planning Commission held a public hearing to consider a Zoning ordinance text amendment to Article 4, Section 408. – Residential Multiple-Family: Medium Density.

During the public hearing, there were no public comments received by the Planning Commission in response to the proposed zoning ordinance amendment. The Planning Commission field the following motion recommending approval of the proposed amendment to the Township Board of Trustees:

A motion was made by Commissioner Tawakkul, supported by Commissioner Doe to approve the zoning ordinance text amendment, amending Article 4, Section 408. – Residential Multiple-Family: Medium Density and forward the recommendation to the Charter Township of Ypsilanti Board of Trustees for consideration.

The motion carried unanimously.

A copy of the staff report to the Planning Commission summarizing the proposed zoning text changes is enclosed for reference.

Staff respectfully requests the Board approve the first reading of Ordinance 2023-XXX amending Zoning Ordinance Article 4, Section 408 – Residential Multiple-Family: Medium Density.

If any questions, concerns, or comments arise relating to the proposed amendment, please do not hesitate to contact me.

Township Supervisor
Brenda L. Stumbo
Township Clerk
Heather Jarrell Roe
Township Treasurer
Stan Eldridge

YPSILANTI TOWNSHIP
— PLANNING & ZONING DEPARTMENT —

Trustees
John Newman II
Gloria Peterson
Debbie Swanson
Ryan Hunter

Memorandum

To: Board of Trustees

From: Fletcher Reyher, Planning and Development Coordinator

Date: August 9, 2023

Re: First Reading: Ordinance 2023-XXX to amend Article 4, Section 409. – Residential Multiple-Family: High Density.

On July 25, 2023, the Charter Township of Ypsilanti Planning Commission held a public hearing to consider a Zoning ordinance text amendment to Article 4, Section 409. – Residential Multiple-Family: High Density.

During the public hearing, there were no public comments received by the Planning Commission in response to the proposed zoning ordinance amendment. The Planning Commission field the following motion recommending approval of the proposed amendment to the Township Board of Trustees:

A motion was made by Commissioner Tawakkul, supported by Commissioner Doe to approve the zoning ordinance text amendment, amending Article 4, Section 409. – Residential Multiple-Family: High Density and forward the recommendation to the Charter Township of Ypsilanti Board of Trustees for consideration.

The motion carried unanimously.

A copy of the staff report to the Planning Commission summarizing the proposed zoning text changes is enclosed for reference.

Staff respectfully requests the Board approve the first reading of Ordinance 2023-XXX amending Zoning Ordinance Article 4, Section 409 – Residential Multiple-Family: High Density.

If any questions, concerns, or comments arise relating to the proposed amendment, please do not hesitate to contact me.

Township Supervisor
Brenda L. Stumbo
Township Clerk
Heather Jarrell Roe
Township Treasurer
Stan Eldridge

YPSILANTI TOWNSHIP
— PLANNING & ZONING DEPARTMENT —

Trustees
John Newman II
Gloria Peterson
Debbie Swanson
Ryan Hunter

Memorandum

To: Board of Trustees

From: Fletcher Reyher, Planning and Development Coordinator

Date: August 9, 2023

Re: First Reading: Ordinance 2023-XXX to amend Article 4, Section 420. – Residential Use Table.

On July 25, 2023, the Charter Township of Ypsilanti Planning Commission held a public hearing to consider a Zoning ordinance text amendment to Article 4, Section 420. – Residential Use Table.

During the public hearing, there were no public comments received by the Planning Commission in response to the proposed zoning ordinance amendment. The Planning Commission field the following motion recommending approval of the proposed amendment to the Township Board of Trustees:

A motion was made by Commissioner Tawakkul, supported by Commissioner Doe to approve the zoning ordinance text amendment, amending Article 4, Section 420. – Residential Use Table and forward the recommendation to the Charter Township of Ypsilanti Board of Trustees for consideration.

The motion carried unanimously.

A copy of the staff report to the Planning Commission summarizing the proposed zoning text changes is enclosed for reference.

Staff respectfully requests the Board approve the first reading of Ordinance 2023-XXX amending Zoning Ordinance Article 4, Section 420 – Residential Use Table.

If any questions, concerns, or comments arise relating to the proposed amendment, please do not hesitate to contact me.

Township Supervisor
Brenda L. Stumbo
Township Clerk
Heather Jarrell Roe
Township Treasurer
Stan Eldridge

YPSILANTI TOWNSHIP
— PLANNING & ZONING DEPARTMENT —

Trustees
John Newman II
Gloria Peterson
Debbie Swanson
Ryan Hunter

Memorandum

To: Board of Trustees

From: Fletcher Reyher, Planning and Development Coordinator

Date: August 9, 2023

Re: First Reading: Ordinance 2023-XXX to amend Article 5, Section 506. – Town Center

---

On July 25, 2023, the Charter Township of Ypsilanti Planning Commission held a public hearing to consider a Zoning ordinance text amendment to Article 5, Section 506. – Town Center.

During the public hearing, there were no public comments received by the Planning Commission in response to the proposed zoning ordinance amendment. The Planning Commission field the following motion recommending approval of the proposed amendment to the Township Board of Trustees:

A motion was made by Commissioner Tawakkul, supported by Commissioner Doe to approve the zoning ordinance text amendment, amending Article 5, Section 506. – Town Center and forward the recommendation to the Charter Township of Ypsilanti Board of Trustees for consideration.

The motion carried unanimously.

A copy of the staff report to the Planning Commission summarizing the proposed zoning text changes is enclosed for reference.

Staff respectfully requests the Board approve the first reading of Ordinance 2023-XXX amending Zoning Ordinance Article 5, Section 506. – Town Center.

If any questions, concerns, or comments arise relating to the proposed amendment, please do not hesitate to contact me.

Township Supervisor
Brenda L. Stumbo
Township Clerk
Heather Jarrell Roe
Township Treasurer
Stan Eldridge

YPSILANTI TOWNSHIP
— PLANNING & ZONING DEPARTMENT —

Trustees
John Newman II
Gloria Peterson
Debbie Swanson
Ryan Hunter

Memorandum

To: Board of Trustees

From: Fletcher Reyher, Planning and Development Coordinator

Date: August 9, 2023

Re: First Reading: Ordinance 2023-XXX to amend Article 11, Section 1128. – Temporary Sidewalk, Outdoor and Tent Sales for Principal Use.

On July 25, 2023, the Charter Township of Ypsilanti Planning Commission held a public hearing to consider a Zoning ordinance text amendment to Article11, Section 1128. – Temporary Sidewalk, Outdoor and Tent Sales for Principal Use.

During the public hearing, there were no public comments received by the Planning Commission in response to the proposed zoning ordinance amendment. The Planning Commission field the following motion recommending approval of the proposed amendment to the Township Board of Trustees:

A motion was made by Commissioner Tawakkul, supported by Commissioner Doe to approve the zoning ordinance text amendment, amending Article 11, Section 1128. – Temporary Sidewalk, Outdoor and Tent Sales for Principal Use and forward the recommendation to the Charter Township of Ypsilanti Board of Trustees for consideration.

The motion carried unanimously.

A copy of the staff report to the Planning Commission summarizing the proposed zoning text changes is enclosed for reference.

Staff respectfully requests the Board approve the first reading of Ordinance 2023-XXX amending Zoning Ordinance Article 11, Section 1128. – Temporary Sidewalk, Outdoor and Tent Sales for Principal Use.

If any questions, concerns, or comments arise relating to the proposed amendment, please do not hesitate to contact me.

Township Supervisor
Brenda L. Stumbo
Township Clerk
Heather Jarrell Roe
Township Treasurer
Stan Eldridge

YPSILANTI TOWNSHIP
— PLANNING & ZONING DEPARTMENT —

Trustees
John Newman II
Gloria Peterson
Debbie Swanson
Ryan Hunter

Memorandum

To: Board of Trustees

From: Fletcher Reyher, Planning and Development Coordinator

Date: August 9, 2023

Re: First Reading: Ordinance 2023-XXX to amend Article 13, Section 1305. – Fences and Walls.

On July 25, 2023, the Charter Township of Ypsilanti Planning Commission held a public hearing to consider a Zoning ordinance text amendment to Article 13, Section 1305. – Fences and Walls.

During the public hearing, there were no public comments received by the Planning Commission in response to the proposed zoning ordinance amendment. The Planning Commission field the following motion recommending approval of the proposed amendment to the Township Board of Trustees:

A motion was made by Commissioner Tawakkul, supported by Commissioner Doe to approve the zoning ordinance text amendment, amending Article 13, Section 1305. – Fences and Walls and forward the recommendation to the Charter Township of Ypsilanti Board of Trustees for consideration.

The motion carried unanimously.

A copy of the staff report to the Planning Commission summarizing the proposed zoning text changes is enclosed for reference.

Staff respectfully requests the Board approve the first reading of Ordinance 2023-XXX amending Zoning Ordinance Article 13, Section 1305. – Fences and Walls.

If any questions, concerns, or comments arise relating to the proposed amendment, please do not hesitate to contact me.

Township Supervisor
Brenda L. Stumbo
Township Clerk
Heather Jarrell Roe
Township Treasurer
Stan Eldridge

YPSILANTI TOWNSHIP
— PLANNING & ZONING DEPARTMENT —

Trustees
John Newman II
Gloria Peterson
Debbie Swanson
Ryan Hunter

Memorandum

To: Board of Trustees

From: Fletcher Reyher, Planning and Development Coordinator

Date: August 9, 2023

Re: First Reading: Ordinance 2023-XXX to amend Article 15, Section 1509. – Signs.

On July 25, 2023, the Charter Township of Ypsilanti Planning Commission held a public hearing to consider a Zoning ordinance text amendment to Article 15, Section 1509. – Signs.

During the public hearing, there were no public comments received by the Planning Commission in response to the proposed zoning ordinance amendment. The Planning Commission field the following motion recommending approval of the proposed amendment to the Township Board of Trustees:

A motion was made by Commissioner Tawakkul, supported by Commissioner Doe to approve the zoning ordinance text amendment, amending Article 15, Section 1509. – Signs and forward the recommendation to the Charter Township of Ypsilanti Board of Trustees for consideration.

The motion carried unanimously.

A copy of the staff report to the Planning Commission summarizing the proposed zoning text changes is enclosed for reference.

Staff respectfully requests the Board approve the first reading of Ordinance 2023-XXX amending Zoning Ordinance Article 15, Section 1509. – Signs.

If any questions, concerns, or comments arise relating to the proposed amendment, please do not hesitate to contact me.

RESOLUTION 2023-07

Resolution Requesting the Washtenaw County Board of Commissioners (WCBOC) to Immediately Strike from the Contract Awarded to the Supreme Felons Inc. on January 19, 2023 Contract Number being 54519 Which was Signed and Recorded with the Washtenaw County Clerk's Office the Provision Contained in Paragraph 5(3) that Authorizes and Sanctions the Supreme Felons Inc. to "Establish a Regular Dispatch and Patrol System for Four Neighborhoods in Zip Codes 48197 and 48198," Two of Which were Subsequently Identified by the Washtenaw County Administrator in an Email Dated May 3, 2023 as Targeting the Appleridge and Sugarbrook Subdivisions

WHEREAS, on ***May 4, 2020*** the "***Articles of Incorporation***" establishing the legal entity known as the "***Supreme Felons Inc.***" was filed with the Michigan Department of Licensing and Regulatory Affairs Corporations, Securities and Commercial Licensing Bureau (LARA), a copy of said Articles being attached hereto and labeled Exhibit A, and

WHEREAS, as set forth in the Articles of Incorporation, there were two named individuals listed as being the "***Incorporators***" to wit:
Alan Fuqua and Billy Cole, and

WHEREAS, on ***February 4, 2021*** LARA received and endorsed the first Certificate of Change identifying the resident agent of Supreme Felons Inc. as being Alan Fuqua, and

WHEREAS, on ***April 6, 2022*** LARA received and endorsed a second Certificate of Change identifying the current resident agent of Supreme Felons Inc. as being Billy Cole, and

WHEREAS, according to the Michigan Department of Corrections (MDOC), Alan Fuqua was convicted by an Oakland County Jury on three counts of Criminal Sexual Conduct 2nd Degree (person under thirteen) and was sentenced by the Court to a minimum sentence of fifteen years with a maximum sentence of thirty years with the date of sentence being

November 12, 2003 and his subsequent discharge from the jurisdiction of the MDOC being ***July 17, 2020***, and

WHEREAS, according to the Michigan Department of Corrections, Billy Ray Cole pled guilty in the Washtenaw County Circuit Court to the offense of Second Degree Murder Homicide with a maximum sentence of life imprisonment with the date of sentence being ***February 27, 1976***, and

WHEREAS, according to the Michigan Department of Corrections, Billy Ray Cole also pled guilty in the Washtenaw County Circuit Court to the offense of "***Robbery – Armed***" with a minimum sentence of sixty years and a maximum sentence of ninety years with the date of sentence being ***February 27, 1976***, and

WHEREAS, on ***August 6, 2019*** the MDOC/Michigan Parole Board granted parole to Billy Ray Cole with supervision being under the auspices of the Washtenaw County Ann Arbor Parole Office with a proposed discharge date of ***August 6, 2023***, and

WHEREAS, on ***July 6, 2022*** (two years and two months after the Supreme Felons Inc. filed the "***Articles of Incorporation***" with LARA) the Washtenaw County Board of Commissioners approved Resolution Number 22-134 entitled "***A Resolution to Approve Funding Recommendations for Community Priority Fund Violence Intervention Allocation in the Amount of $1,650,000***" and

WHEREAS of the ***$1,650,000*** that was approved by the WCBOC on ***July 6, 2022*** per Resolution 22-134 nearly 75% was awarded to the Supreme Felons Inc. even though Washtenaw County Administrator Greg Dill subsequently acknowledged that the proposal submitted by the Supreme Felons contained a "***huge stretch between what they said they did and what they actually completed. Yes, there was some ambiguity between what the Supreme Felons put in the application and the work they did, that was flagged by us but we didn't think that***

was enough to disqualify them" and

WHEREAS, while the Resolution to Approve the ***$1,200,000*** by the WCBOC occurred on ***July 6, 2022***, it was not until ***January 19, 2023*** that a contract was prepared and entered into between Washtenaw County and the Supreme Felons (due to the organization not having "***contract readiness***), said contract being in the amount of ***$1,200,000*** with a start date of ***January 1, 2023*** and an end date of ***December 31, 2024***, a copy of said contract being attached hereto and incorporated by reference as Exhibit B; and

WHEREAS, the Washtenaw County Board of Commissioners without providing any notice whatsoever to the Ypsilanti Township Board of Trustees much less having any conversations, engagement or input from the Township Board provided in the contract and specifically Paragraph Five entitled "***Activities***" and subparagraph Three that the Supreme Felons Inc. be authorized to "***Establish a regular dispatch and patrol system for four neighborhoods in zip codes 48197 and 48198***" which the so-called Dispatch and Patrol system was subsequently identified by the Washtenaw County Administrator in an email dated May 3, 2023 as targeting the Appleridge and Sugarbrook subdivisions, a copy of said email being attached hereto and incorporated by reference and labeled Exhibit C; and

WHEREAS the Township's full time elected officials pursuant to the direction of the Township Board of Trustees met with both the Washtenaw County Administrator Greg Dill and Washtenaw County Sheriff Jerry Clayton wherein they strongly set forth the Township's objections to the sanctioning and authorization by the Washtenaw County Board of Commissioners to promote the "***Establish[ment of] a regular dispatch and patrol system***…" in any areas of Ypsilanti Township especially in light of the fact that Ypsilanti Township has been under contract for police

services which includes "***Dispatch and Patrol***" with the Washtenaw County Sheriff's Department for over 50+ years (see email dated ***April 4, 2023*** signed by the Township's three full time officials being attached hereto and incorporated by reference and labeled Exhibit D); and

WHEREAS, the most recent Police Services Contract which was executed on ***February 21, 2023*** by the authorized representatives of Ypsilanti Township, Washtenaw County and the Washtenaw County Sheriff for the time period commencing on ***January 1, 2023*** and ending on ***December 31, 2026*** obligates the Township financially to remit payment to Washtenaw County and the Washtenaw County Sheriff the following amounts for police services:

2023: ***$5,966,485***

2024: ***$6,205,150***
2025: ***$6,468,875***

2026: ***$6,743,800***; and

WHEREAS, in spite of the strong objections expressed to both Washtenaw County Administrator Dill and Washtenaw County Sheriff Jerry Clayton that the Ypsilanti Township Board of Trustees did not want the Supreme Felons to establish a dispatch and patrol system in any of the Township's neighborhoods which is the responsibility of the Sheriff's Department, this request to strike that provision from the ***January 19, 2023*** contract between Washtenaw County and the Supreme Felons Inc. was denied; and

WHEREAS those objections that were presented pursuant to the directive of the Ypsilanti Township Board of Trustees by the Township's full time officials have not changed from the day the Township became aware of this interference in law enforcement responsibilities in Ypsilanti Township; and

WHEREAS it was not until ***May 3, 2023*** when Ypsilanti Township Supervisor Brenda L. Stumbo received a letter from Washtenaw County

Administrator Greg Dill that the Township became aware that Washtenaw County had "***Specifically Targeted***" the Sugarbrook and Appleridge subdivisions as the neighborhoods in which the Supreme Felons Inc. were authorized and sanctioned by Washtenaw County to establish a dispatch and patrol system; and

WHEREAS the residents of those subdivisions as well as the Ypsilanti Township Board of Trustees have a right and responsibility to know the complete criminal background of anyone who is conducting a "***Dispatch and Patrol System***" in Township neighborhoods and furthermore, Washtenaw County's authorization for Supreme Felons Inc. to initiate a "***Dispatch and Patrol System***" in the Appleridge and Sugarbrook subdivisions is ***NOT*** a permitted function or activity pursuant to the Township's Police Services Contract with Washtenaw County and the Washtenaw County Sheriff; and

WHEREAS the "***Sanctioning and Subcontracting***" out of Police Services by the Washtenaw County Board of Commissioners to the Supreme Felons Inc. is in direct contravention of the Washtenaw County Police Services contract that was recently entered into between the parties; and

WHEREAS this "***Sanctioning and Subcontracting***" out of "***Dispatch and Patrol Services***" by the Washtenaw County Board of Commissioners in the Appleridge and Sugarbrook subdivisions to the Supreme Felons Inc. poses significant and potential liability to both the residents of those subdivisions as well as the Washtenaw County Sheriff's Deputies who are under contract to respond to Calls for Service that emanate from both the Sugarbrook and Appleridge subdivisions; and

WHEREAS the Ypsilanti Charter Township Board of Trustees in light of the ***January 19, 2023*** contract that was entered into between the Washtenaw County Board of Commissioners and the Supreme Felons Inc. which explicitly authorizes the Supreme Felons Inc. to "***Establish a dispatch and patrol system***" which according to the ***May 3, 2023*** email from County Administrator Greg Dill specifically targets the Appleridge and Sugarbrook subdivisions ***HEREBY RESOLVES THAT THE WASHTENAW COUNTY BOARD OF COMMISSIONERS AND THE WASHTENAW COUNTY ADMINISTRATOR PROCEED AS FOLLOWS***:

1. That the ***January 19, 2023*** contract which was entered into between Washtenaw County and the Supreme Felons Inc. immediately have stricken from said contract Washtenaw County's authorization for the Supreme Felons to "***Establish a regular dispatch and patrol system***" in the 48197 and 48198 zip codes as it pertains to any areas within the boundaries of the Charter Township of Ypsilanti,
2. That the County Administrator immediately notify the named representatives of the Supreme Felons Inc. that any previous authorization or sanctioning of that organization by Washtenaw County to "***Establish a regular dispatch and patrol system***" pursuant to the ***January 19, 2023*** contract as it pertains to the Appleridge and Sugarbrook subdivisions is hereby ordered to cease and desist immediately.
3. That the Chairperson of the Washtenaw County Board of Commissioners Justin Hodge forward the revised contract between the Supreme Felons Inc. and Washtenaw County confirming that Washtenaw County's authorization for the

Supreme Felons to “***Establish a regular dispatch and patrol system in the 48197 and 48198 zip codes***” has been stricken as it pertains to any areas within the boundaries of the Charter Township of Ypsilanti.

4. That the Chairperson of the Washtenaw County Board of Commissioners Justin Hodge and Washtenaw County Administrator Greg Dill forward a copy of the notification to the representatives of the Supreme Felons Inc. that any previous authorization or sanctioning by Washtenaw County to “***Establish a regular dispatch and patrol system***” as it pertains to the Appleridge and Sugarbrook subdivisions is hereby ordered to cease and desist immediately.

EXHIBITS

A - Articles of Incorporation filed by Supreme Felons Inc. with the Michigan Department of Licensing and Regulatory Affairs and Commercial Licensing Bureau on ***May 4, 2020***

B - Contract #54519 entered into between Washtenaw County and the Supreme Felons Inc. effective as of ***January 19, 2023*** as executed by Washtenaw County Administrator Gregory Dill and Supreme Felons Inc. Executive Director Billy Cole covering the time period from ***January 1, 2023 – December 31, 2024*** for the sum of ***$1,200,000***

C - Email from Washtenaw County Administrator Greg Dill dated ***May 3, 2023*** addressed to Supervisor Stumbo confirming the establishment of a dispatch and patrol system in the Appleridge and Sugarbrook subdivisions

D - Email from Township's Full Time Officials Dated ***April 4, 2023*** requesting that Supreme Felons Inc. not be utilized in Ypsilanti Township for purpose of establishing a dispatch and patrol system

EXHIBIT A

CSCL/CD-502 (Rev. 07/19)

03

MICHIGAN DEPARTMENT OF LICENSING AND REGULATORY AFFAIRS
CORPORATIONS, SECURITIES & COMMERCIAL LICENSING BUREAU

Date Received
MAY 01 2020

AC1

(FOR BUREAU USE ONLY)

This document is effective on the date filed, unless a subsequent effective date within 90 days after received date is stated in the document.

Name
Alan Fuqua

Address
2080 Whittaker Rd. Suite 25B

City | State | ZIP Code
Ypsilanti | MI | 48197

EFFECTIVE DATE:

Document will be returned to the name and address you enter above.
If left blank, document will be returned to the registered office.

FILED
MAY 04 2020
ADMINISTRATOR
CORPORATIONS DIVISION

ARTICLES OF INCORPORATION
For use by Domestic Nonprofit Corporations
(Please read information and instructions on the last page)

Pursuant to the provisions of Act 162, Public Acts of 1982, the undersigned corporation executes the following Articles:

ARTICLE I

The name of the corporation is:

Supreme Felons Inc.

ARTICLE II

The purpose or purposes for which the corporation is formed are: The purpose for which the Corporation this Corporation is organized exclusively for charitable purposes within the meaning of Sec. 501(c)(3) of the Internal Revenue Code of 1986, as now enacted or hereafter amended, including, for such purposes, the making of distributions to organizations that also qualify as Sec. 501(c)(3) exempt organizations. To this end, the corporation shall engage in strengthening Public Safety through ameliorating the public on the Relationships between Public Safety, Rehabilitation, and Recidivism.

ARTICLE III

1. The corporation is formed upon a NONstock basis.
(Stock or Nonstock)

2. If formed on a stock basis, the total number of shares the corporation has authority to issue is N/A. If the shares are or are to be divided into classes, the designation of each class, the number of shares in each class, and the relative rights, preferences and limitations of the shares of each class to the extent that the designations, numbers, relative rights, preferences, and limitations have been determined are as follows:

W

$50.00 1956902 CK/T.C (M) CK# 1087660507

ARTICLE III (cont.)

3. a. If formed on a nonstock basis, the description and value of its real property assets are: (if none, insert "none")

NONE

b. The description and value of its personal property assets are: (if none, insert "none")

NONE

c. The corporation is to be financed under the following general plan: [redacted] Grants, gifts, contributions Donation, and fundraising.

d. The corporation is formed on a Directorship basis.
(Membership or Directorship)

ARTICLE IV

1. The name of the resident agent at the registered office is:

Cindy Sutton

2. The address of its registered office in Michigan is:

2080 Whittaker Rd. Suite 258 (Street Address) Ypsilanti (City), Michigan 48197 (ZIP Code)

3. The mailing address of the registered office in Michigan if different than above:

2080 Whittaker Rd. Suite 258 (Street Address or PO Box) Ypsilanti (City), Michigan 48197 (ZIP Code)

ARTICLE V

The name(s) and address(es) of the incorporator(s) is (are) as follows:

Name	Residence or Business Address
Alan Fuqua	2080 Whittaker Rd. Suite 258, Ypsilanti, MI 48197
Billy Cole	2080 Whittaker Rd. Suite 258, Ypsilanti, MI 48197

Use space below for additional Articles or for continuation of previous Articles. Please identify any Article being continued or added. Attach additional pages if needed.

I, (We), the incorporator(s) sign my (our) name(s) this 4/24 day of 2020.

Alan Fuqua — Alan Fuqua

Billy Cole — Billy Cole

EXHIBIT B

Contract # 54519

COUNTY OF WASHTENAW, MICHIGAN

Agreement for Subaward of Federal Financial Assistance
American Rescue Plan Act (ARPA)
Coronavirus State and Local Fiscal Recovery Funds (SLFRF)
Community Priority Fund

The COUNTY OF WASHTENAW is a recipient of federal financial assistance grant dollars. These funds are received directly from the federal government. The County sometimes passes through a portion of this federal financial assistance to other organizations located within (or in the vicinity of) the geographical boundaries of the County to assist them in carrying out the objectives of the applicable federal grant or program.

AGREEMENT is made this 1st day of January 2023, by the COUNTY OF WASHTENAW, a municipal corporation, with offices located in the County Administration Building, 220 North Main Street, Ann Arbor, Michigan, as the pass-through entity (hereinafter referred to as the County) and, Supreme Felons Inc. located at 218 N. Adams St., Ypsilanti, MI 48197 (hereinafter often referred to as the Subrecipient).

This agreement is a subaward of federal financial assistance by the County to the Subrecipient intended to assist, stimulate, or support the Subrecipient in carrying out its allowable activities under the American Rescue Plan, Coronavirus State and Local Fiscal Recovery Funds – Community Priority Funds as requested by the Subrecipient in its application to the County for federal financial assistance.

Flow of Federal Financial Assistance in this Subaward Agreement

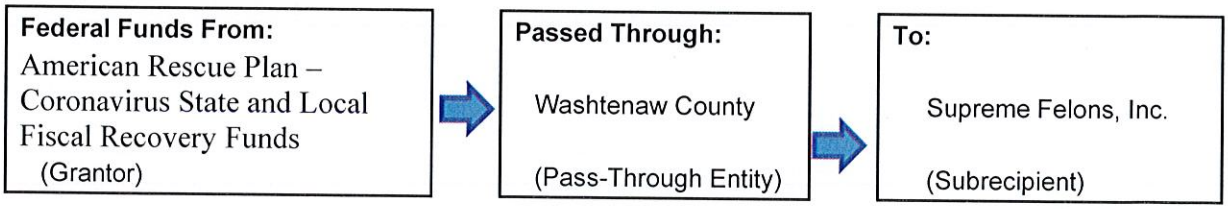

ARTICLE I – REQUIRED DATA ELEMENTS

(As detailed in Section 200.331 of the Uniform Administrative Requirements, Cost Principles, and Audit Requirements for Federal Awards (2 CFR Chapter I, and Chapter II, Parts 200, 215, 220, 225, 230) issued December 26, 2013 by the Executive Office of the President, Office of Management and Budget, hereinafter referred to as the Uniform Guidance.)

Subrecipient Name (must match registered name in DUNS)	Supreme Felons, Inc.
Subrecipient DUNS Number	
Federal Award Identification Number (FAIN)	SLFRFP0226
Federal Award Date (the date when the federal award is signed by the authorized official of the federal awarding agency)	March 11, 2021, American Rescue Plan Act of 2021 (H.R. 1319)
Subaward Period of Performance (start and end date)	January 1, 2023 – December 31, 2024
Amount of Federal Funds Obligated by this Agreement	One million two hundred thousand ($1, 200,000)

Total Amount of Federal Funds Obligated to the Subrecipient	One million two hundred thousand ($1, 200,000)
Total Amount of the Federal Award	One million two hundred thousand ($1, 200,000)
Federal Award **Project Description** (as required to be responsive to the Federal Funding Accountability and Transparency Act (FFATA) described in Title 2 Code of Federal Regulations Part 170)	Supreme Felons is a grassroots organization located in Ypsilanti Michigan whose mission is to provide support and services to returning citizens; to provide support, education and intervention services to prevent community violence and recidivism; to provide services to youth including mentoring to prevent crime and violence; to provide community-based services seniors; and to provide other programs and services to with the goals of reducing or preventing recidivism, crime, and violence and otherwise benefitting and strengthening the community.
Name of Federal Awarding Agency	U. S. Department of Treasury
Name of County (Pass-Through Entity)	Washtenaw County
Name and Contact Information for Awarding Official	Gregory Dill, County Administrator,220 North Main, P.O. Box 8645, Ann Arbor MI 48107
CFDA Number and Name	21.027 Coronavirus State and Local Fiscal Recovery Funds (SLFRF)
Is this Subaward for Research and Development? (answer Yes or No)	No

In consideration of the promises below, the parties mutually agree as follows:

ARTICLE II - SCOPE OF SERVICES

The Subrecipient will provide services as outlined in this article for scope of services and as awarded by Board Resolution #22-134 dated July 6, 2022.

1. Organization's Overview

Supreme Felons is a grassroots organization located in Ypsilanti Michigan whose mission is to provide support and services to returning citizens; to provide support, education and intervention services to prevent community violence and recidivism; to provide services to youth including mentoring to prevent crime and violence; to provide community-based services seniors; and to provide other programs and services to with the goals of reducing or preventing recidivism, crime, and violence and otherwise benefitting and strengthening the community.

2. Brief description of structure and objectives of assistance program(s), including public health or negative economic impact experienced

Supreme Felons Inc. (SFI) employs a holistic approach to providing support services to formerly incarcerated youth and adults to prevent and/or reduce recidivism. SFI program activities include **a)** Expanding youth programming by establishing a youth mentorship program in partnership with local middle and high schools as well as organizing and hosting events and activities for youth. The program will include assistance for at-risk youth involved in the juvenile

judicial system to increase access to housing, physical and mental health care, and other community services; **b)** Establish a peer-to-peer mentor program for returning citizens, including referral assistance to increase access to housing, physical and mental health care, and other community services. **c)** Establish a Community Violence Response program and neighborhood patrols in neighborhoods within the 48197 and 48198 zip codes to prevent and de-escalate street violence; **d)** Distribute food, COVID-related personal protection equipment, and items to meet basic needs of older adults in the community.

Note: This program will focus its services on the geographic area within the 48197 and 48198 zip codes and expects most or all of its beneficiaries to be residents of these areas. But this grant is a county-wide grant and the program may provide services to other county residents who meet the program's need criteria – e.g., a youth referred by CMH or the county detention facility.

3. Brief description of how the subrecipient's approach is reasonable and proportional to a public health or negative economic impact of COVID-19.

Formerly incarcerated youth, adults, and older citizens have been disproportionately impacted by the pandemic. Limited access to support services, including affordable housing, employment, transportation, and mental health services has largely contributed to adverse health outcomes and high rates of recidivism for formerly incarcerated youth and adults. The negative impact of the Covid-19 pandemic has exacerbated the already precarious support services available for formerly incarcerated citizens. Supreme Felons greatly contributes to expanding a support network that promotes and sustains successful re-entry.

4. Objectives

Subrecipient will use Community Priority Fund award to:

1. Expand youth programming by establishing a youth mentorship program including developing internal systems for recruiting, hiring, compensating, and training youth mentors. This program will include collaboration with the schools and the sponsorship of events for youth
2. Establish a peer-to-peer mentor program for returning citizens, including developing internal systems for recruiting, hiring, compensating, and training peer mentors.
3. Establish Community Violence Response program and neighborhood patrols to respond to conflicts that occur in the community and help mediate to reach truces or agreements.
4. Distribute food and basic necessities to senior citizens in the community

5. Activities

1. Hire and train youth mentors
2. Hire and train peer-to-peer mentors for returning citizens
3. Establish a regular dispatch and patrol system for 4 neighborhoods in zip codes 48197 and 48198; through this system and through other activities, prevent conflicts in the community from escalating into violence.
4. Provide opportunities for youth to engage in safe, community-building activities and events as an alternative to activities that could lead to criminal legal system involvement
5. Establish a system to provide food and other basic needs supports to senior citizens.

6. Deliverables

1. Formalize partnership with local middle and high school(s) and other community stakeholders to offer youth mentorship programming.
2. Develop written policies for peer-to-peer mentorship program.
3. Develop materials and agendas for restorative justice training.
4. Develop written policies and procedures for Community Violence Response dispatch program and Supreme Felons Patrol.
5. Develop marketing materials for organized events/activities for youth.

7. Subrecipient Monitoring

1. Subrecipient will participate in monthly or quarterly monitoring meetings with County Data and Evaluation managers (frequency to be determined by County based on risk assessment).
2. Subrecipient monitoring may include in-person or virtual meetings; site visits; and/or submission and review of financial statements, performance data, organizational or program policy, or other materials as needed to ensure compliance with federal award guidance.

8. Participation in Evaluation Activities

Subrecipient will work with County Data and Evaluation Managers to:

1. Select performance and outcome measures to be submitted as part of quarterly programmatic reports, in addition to federally required data elements. Selected performance measures will be included as a contract amendment.
2. Develop internal capacity including data collection tools, software, processes, and procedures to support data collection and reporting.
3. Participate in regular (monthly to quarterly) meetings with Data and Evaluation Managers and with the Community Priority Fund cohort to participate in training and evaluation skill-building activities.
4. Adhere to all relevant laws and regulations to protect privacy and confidentiality of beneficiary/participant data.

ARTICLE III - PAYMENT AND CASH MANAGEMENT

If the County is paid in advance by the federal awarding agency under the above-named federal assistance award, the Subrecipient may also be paid in advance if it meets the requirements in Section 1 below.

Section 1 - Cash Advances. The Subrecipient may request an advance of funds under this agreement if it maintains or demonstrates the willingness to maintain both:

1. written procedures that minimize the time elapsing between the transfer of funds from the County and the subsequent disbursement of the funds by the Subrecipient,
2. financial management systems that meet the standards for fund control and accountability as defined in Section 200.305 of the Uniform Guidance.

.

Requests for advance of funds must be limited to the minimum amount needed and must be timed to be in accordance with the actual, immediate cash requirements of the Subrecipient in carrying out the terms of this agreement. The timing and amount of the advance must be as close as is "administratively feasible" to the actual disbursement to be made by the Subrecipient.

Section 2 - Reimbursement. If the Subrecipient does not meet the requirements in Section 1 above, it shall submit periodic reimbursement requests to the County. This may be done on a monthly or quarterly basis. The reimbursement request shall be accompanied by the agreed upon financial and programmatic reports. The County shall pay the Subrecipient within 30 calendar days after the receipt of the reimbursement request and the agreed upon financial/programmatic reports, unless the County reasonably believes the reimbursement request to be improper.

ARTICLE IV - REPORTING OF SUBRECIPIENT

Section 1 - The Subrecipient is to report to Alize Asberry Payne, Racial Equity Officer or their designee and will cooperate and confer with him/her as necessary to insure satisfactory work progress.

Section 2 - The Subrecipient shall submit financial reports detailing utilization of funds monthly, and for months of quarters ending not less than 15 days after an end of a quarter, for quarters ending reports are due April 15th, July 15th, October 15th, and January 15th for as long as funds are expended or through January 15th, 2025. Reports are to be submitted electronically to Abigail Sekar at sekara@washtenaw.org, Maria Militzer at militzerm@washtenaw.org and Kelly Belknap at belknapk@washtenaw.org

The Subrecipient shall submit programmatic reports electronically at the same time and frequency as the financial reports unless otherwise agreed to by the Director of the Racial Equity Office. Reports should be submitted to Abigail Sekar at sekara@washtenaw.org, Maria Militzer at militzerm@washtenaw.org and Kelly Belknap at belknapk@washtenaw.org.

Section 3 - All reports, estimates, memoranda, and documents submitted by the Subrecipient must be dated and bear the Subrecipient's name. Financial reports shall be submitted in a timely manner to the County and shall be in agreement with the amounts shown in the Subrecipient's financial system and shall be supported by appropriate documentation (payroll `records, invoices, etc.). Final financial and programmatic reports shall be submitted by the Subrecipient within 15 days of the end of this agreement unless an extension of time is granted in writing by the County.

Section 4 - The Subrecipient agrees to only incur costs under this agreement which are eligible under the Cost Principles detailed in Section 200.400-475 of the Uniform Guidance.

Section 5 - The Subrecipient shall retain all reports, records and supporting documentation pertaining to this agreement for a period of five years from the date of submission of the final expenditure report and shall make them available to the County and the federal awarding agency upon request.

Section 6 - All reports made in connection with these services are subject to review and final approval by the County Administrator.

Section 7 - The County may review and inspect the Subrecipient's activities during the term of this agreement.

Section 8 - When applicable, the Subrecipient will submit a final, written report to the County Administrator.

Section 9 - After reasonable notice to the Subrecipient, the County may review any of the Subrecipient's internal records, reports, or insurance policies.

Section 10 - The Subrecipient and/or subcontractors shall disclose in writing to the County any potential conflict of interest it has related to the County or this agreement subject to the provisions 2 CFR 200.318.

Section 11 - The Subrecipient shall disclose in writing to the County in a timely manner all violations of Federal criminal law involving fraud, bribery, or gratuity violations potentially affecting this agreement.

Section 12 - The Subrecipient shall report to the County in a timely manner if any adverse or problematic situations arise between reporting deadlines describing the nature of the problem and what is being done to address it.

ARTICLE V – ARPA - SLFRF REPORTING REQUIREMNTS

The State and Local Fiscal Recovery Funds program as established by the American Rescue Act plan requires reporting expenditures, programmatic data, and project demographic distribution.

Expenditure reports are to be submitted monthly, no later than the 15th of the month and as outlined in Section 2 of Article IV – Reporting of Subrecipient. Program data is to be submitted quarterly as identified in Attachment A – Quarterly Data Reporting Requirements.

On a quarterly basis, due no later than the 15th of the month following the end of a calendar year quarter programmatic data, and project demographic distribution data as outlined in Attachment A will be required. This is in addition to the monthly expenditure report. Reports are due by no later than January 15th, April 15th, July 15th, and October 15th.

During the course of this contract Supreme Felons, Inc. will work with the Data and Evaluation Managers to identify and collect performance measures including equity metrics that are applicable to their programming.

ARTICLE VI - TERM

This contract begins on the date of this agreement and ends on December 31, 2024, *with an option to extend for two (2) additional one (1) year periods if funding and federal award allows for the extension.*

No costs eligible under this agreement shall be incurred by the Subrecipient before or after these dates, except with prior written approval of the County.

ARTICLE VII- RESPONSIBILITIES OF THE SUBRECIPIENT

Section 1 - The Subrecipient agrees to comply with all applicable federal, State, and local regulations including the Uniform Guidance. The Subrecipient agrees to comply with the management systems standards (financial management (Sections 200.302-304), procurement (Sections 200.317-326), and property management (Sections 200.310-316)) of the Uniform Guidance.

Section 2 - The Subrecipient agrees to have performed a Single Audit of its federal expenditures if it reaches the Single Audit dollar threshold in federal expenditures during its fiscal year as detailed in Section 200.501 of the Uniform Guidance. The County reserves the right to perform or cause to be performed additional audits if it deems such to be necessary to insure

compliance with the terms of this agreement or to determine the eligibility of the reported expenditures for reimbursement.

Section 3 - The Subrecipient agrees to comply with the provisions of the Byrd Amendment (Public Law 101-121, Section 319 - 31 U.S. Code Section 1352) which prohibits the use of federal funds by the recipient or subrecipient of a Federal contract, grant, loan, or cooperative agreement to pay any person to influence or attempt to influence an officer or employee of any agency, a Member of Congress, an officer or employee of Congress, or an employee of a Member of Congress in connection with the federal funds awarded under this agreement.

Section 4 – The Subrecipient agrees to comply with the provisions of the Stevens Amendment (Section 8136 of the Department of Defense Appropriations Act – Public Law 100-463) which stipulates that when issuing statements, press releases, requests for proposals, bid solicitations, and other documents describing projects or programs funded in whole or in part with federal money, all grantees receiving federal funds, including but not limited to state and local governments, shall clearly state (1) the percentage of the total cost of the program or project which will be financed with federal money, (2) the dollar amount of federal funds for the project or program, and (3) the percentage and dollar amount of the total costs of the project or program that will be funded by non-governmental sources.

Section 5 - In addition to this agreement, the Subrecipient shall complete, sign, and submit to the County the following documents which are attached as part of this agreement:

1. Standard Assurances
2. Certifications Regarding Lobbying; Debarment, Suspension and Other Responsibility Matters; and Drug-Free Workplace Requirements
3. Audit Certification

ARTICLE VIII – SUSPENSION OF FUNDING

The County may suspend funding to the Subrecipient, in whole or in part, or other measures may be imposed for any of the following reasons:

1. Failure to expend funds in a timely manner consistent with the agreement milestones, guidance, and assurances.
2. Failure to comply with the requirements or statutory objectives of federal or state law.
3. Failure to follow agreement requirements or special conditions.
4. Proposal or implementation of substantial plan changes to the extent that, if originally submitted, the application would not have been approved for funding.
5. Failure to submit required reports.
6. Filing of a false certification on the application or other report or document.
7. Failure to adequately manage, monitor or direct the activities of its subrecipients that are funded under this agreement.

Before taking action, the County will provide the Subrecipient reasonable notice of intent to impose corrective measures and will make every effort to resolve the problem informally.

The County reserves the right to recommend to the federal government that the Subrecipient be suspended or debarred in the case of sustained significant noncompliance by the Subrecipient with the award provisions.

ARTICLE IX- PERSONNEL

Section 1 - The Subrecipient will provide the required services and will not subaward or assign the services without the County's written approval.

Section 2 - The Subrecipient will not hire any County employee for any of the required services without the County's written approval.

Section 3 - The parties agree that all work done under this agreement shall be completed in the United States and that none of the work will be partially or fully completed by either an offshore entity or offshore business interest either owned or affiliated with the Subrecipient. For purposes of this agreement, the term, "offshore" refers to any area outside the contiguous United States, Alaska or Hawaii.

ARTICLE X-INDEPENDENT CONTRACTOR / SUBRECIPIENT

Subrecipient and the County shall, at all times, be deemed to be independent Subrecipient and nothing herein shall be construed to create or imply that there exists between the parties a partnership, joint venture or other business organization. Subrecipient shall hold no authority, express or implied, to commit, obligate or make representations on behalf of the County and shall make no representation to others to the contrary.

Nothing herein is intended nor shall be construed for any purpose as creating the relationship of employer and employee or agent and principal between the parties. Except as otherwise specified in this contract, Subrecipient retains the sole right and obligation to direct, control or supervise the details and means by which the services under this contract are provided.

Subrecipient shall not be eligible for, or participate in, any insurance, pension, workers' compensation insurance, profit sharing or other plans established for the benefit of the County's employees. Subrecipient shall be solely responsible for payment of all taxes arising out of the Subrecipient's activities in connection with this Agreement, including, without limitation, federal and state income taxes, social security taxes, unemployment insurance taxes and any other tax or business license fees as required. The County shall not be responsible for withholding any income or employment taxes whatsoever on behalf of the Subrecipient.

ARTICLE XI - INDEMNIFICATION AGREEMENT

The Subrecipient will protect, defend and indemnify the County, its officers, agents, servants, volunteers and employees from any and all liabilities, claims, liens, fines, demands and costs, including legal fees, of whatsoever kind and nature which may result in injury or death to any persons, including the Subrecipient's own employees, and for loss or damage to any property, including property owned or in the care, custody or control of the County in connection with or in any way incident to or arising out of the occupancy, use, service, operations, performance or non-performance of work in connection with this agreement resulting in whole or in part from negligent acts or omissions of Subrecipient, any subcontractor of the Subrecipient, or any employee, agent or representative of the Subrecipient or any subcontractor of the Subrecipient.

ARTICLE XII- INSURANCE REQUIREMENTS

The Subrecipient will maintain at its own expense during the term of this Agreement, the following insurance:

1. Workers' Compensation Insurance with Michigan statutory limits and Employers Liability Insurance with a minimum limit of $100,000 each accident for any employee.

2. Commercial General Liability Insurance with a combined single limit of $1,000,000 each occurrence for bodily injury and property damage. The County shall be added as "additional insured" on general liability policy with respect to the services provided under this agreement.

3. Automobile Liability Insurance covering all owned, hired and non-owned vehicles with Personal Protection Insurance and Property Protection Insurance to comply with the provisions of the Michigan No Fault Insurance Law, including residual liability insurance with a minimum combined single limit of $1,000,000 each accident for bodily injury and property damage. For transportation services contracts, the County shall be added as additional insured on automobile liability policy with respect to the services provided under this contract.

Insurance companies, named insureds and policy forms may be subject to the approval of the County Administrator, if requested by the County Administrator. Such approval shall not be unreasonably withheld. Insurance policies shall not contain endorsements or policy conditions which reduce coverage provided to The County. Subrecipient shall be responsible to the County or insurance companies insuring the County for all costs resulting from both financially unsound insurance companies selected by Subrecipient and their inadequate insurance coverage. Subrecipient shall furnish the County Administrator with satisfactory certificates of insurance or a certified copy of the policy, if requested by the County Administrator.

No payments will be made to the Subrecipient until the current certificates of insurance have been received and approved by the Administrator. If the insurance as evidenced by the certificates furnished by the Subrecipient expires or is canceled during the term of the agreement, services and related payments will be suspended. Subrecipient shall furnish certification of insurance evidencing such coverage and endorsements at least ten (10) working days prior to commencement of services under this agreement. Certificates shall be addressed to the County c/o Racial Equity Office, 220 N. Main. P.O. Box 8645, Ann Arbor MI 48105-8645, and shall provide for written notice to the Certificate holder of cancellation of coverage.

ARTICLE XIII - COMPLIANCE WITH LAWS AND REGULATIONS

The Subrecipient will comply with all federal, state and local regulations, including but not limited to all applicable OSHA/MIOSHA requirements and the Americans with Disabilities Act.

The Subrecipient agrees to maintain the proper organizational status (such as 501 (c)(3) if needed) to be eligible to receive federal financial assistance under this grant, including proper licensure, registration, etc. Subrecipient agrees to keep itself in the same legal position/mode of organization as when it entered into this agreement.

ARTICLE XIV - INTEREST OF SUBRECIPIENT AND COUNTY

The Subrecipient promises that it has no interest which would conflict with the performance of services required by this agreement. The Subrecipient also promises that, in the performance of this agreement, no officer, agent, employee of the County, or member of its

governing bodies, may participate in any decision relating to this agreement which affects his/her personal interest or the interest of any corporation, partnership or association in which he/she is directly or indirectly interested or has any personal or pecuniary interest. However, this paragraph does not apply if there has been compliance with the provisions of Section 3 of Act No. 317 of the Public Acts of 1968 and/or Section 30 of Act No. 156 of Public Acts of 1851, as amended by Act No. 51 of the Public Acts of 1978, whichever is applicable.

ARTICLE XV - CONTINGENT FEES

The Subrecipient promises that it has not employed or retained any company or person, other than bona fide employees working solely for the Subrecipient, to solicit or secure this agreement, and that it has not paid or agreed to pay any company or person, other than bona fide employees working solely for the Subrecipient, any fee, commission, percentage, brokerage fee, gifts or any other consideration contingent upon or resulting from the award or making of this agreement. For breach of this promise, the County may cancel this agreement without liability or, at its discretion, deduct the full amount of the fee, commission, percentage, brokerage fee, gift or contingent fee from the compensation due the Subrecipient.

ARTICLE XVI - EQUAL EMPLOYMENT OPPORTUNITY

The Subrecipient will not discriminate against any employee or applicant for employment because of race, creed, color, sex, sexual orientation, national origin, physical handicap, age, height, weight, marital status, veteran status, religion and political belief (except as it relates to a bona fide occupational qualification reasonably necessary to the normal operation of the business).

The Subrecipient will take affirmative action to eliminate discrimination based on sex, race, or a handicap in the hiring of applicant and the treatment of employees. Affirmative action will include, but not be limited to: Employment; upgrading, demotion or transfer; recruitment advertisement; layoff or termination; rates of pay or other forms of compensation; selection for training, including apprenticeship.

The Subrecipient agrees to post notices containing this policy against discrimination in conspicuous places available to applicants for employment and employees. All solicitations or advertisements for employees, placed by or on the behalf of the Subrecipient, will state that all qualified applicants will receive consideration for employment without regard to race, creed, color, sex, sexual orientation, national origin, physical handicap, age, height, weight, marital status, veteran status, religion and political belief.

ARTICLE XVII - LIVING WAGE

The parties understand that the County has enacted a Living Wage Ordinance that requires covered vendors who execute a service or professional service agreement with the County to pay their employees under that agreement, a minimum of either $14.82 per hour with benefits or $16.52 per hour without benefits. Subrecipient agrees to comply with this Ordinance in paying its employees. The Subrecipient understands and agrees that an adjustment of the living wage amounts, based upon the Health and Human Services poverty guidelines, will be made on or before April 30, 2023, and annually thereafter which amount shall be automatically incorporated into this agreement. County agrees to give the Subrecipient thirty (30) days written notice of such change. The Subrecipient agrees to post a notice containing the County's Living Wage requirements at a location at its place of business accessed by its employees.

ARTICLE XVIII - ASSIGNS AND SUCCESSORS

This agreement is binding on the County and the Subrecipient, their successors and assigns. Neither the County nor the Subrecipient will assign or transfer its interest in this agreement without the written consent of the other.

ARTICLE XIX - TERMINATION OF AGREEMENT

Termination without cause. Either party may terminate the agreement by giving thirty (30) days written notice to the other party. Upon any such termination, the Subrecipient agrees to return to the County any funds not authorized for use, and the County shall have no further obligation to reimburse the Subrecipient. Upon termination of the agreement, the Subrecipient shall submit documentation, in a format specified by the County, to formally end its participation in the agreement.

ARTICLE XX - EQUAL ACCESS

The Subrecipient shall provide the services set forth in the Scope of Service section of this agreement without discrimination on the basis of race, color, religion, national origin, sex, sexual orientation, marital status, physical handicap, or age.

ARTICLE XXI - OWNERSHIP OF DOCUMENTS AND PUBLICATION

All documents developed as a result of this agreement will be freely available to the public. None may be copyrighted by the Subrecipient. During the performance of the services, the Subrecipient will be responsible for any loss of or damage to the documents while they are in its possession and must restore the loss or damage at its expense. Any use of the information and results of this agreement by the Subrecipient must reference the project sponsorship by the County. Any publication of the information or results must be co-authored by the County.

ARTICLE XXII - PAYROLL TAXES

The Subrecipient is responsible for all applicable state and federal social security benefits and unemployment taxes for its employees and agrees to indemnify and protect the County against such liability.

ARTICLE XXIII - PRACTICE AND ETHICS

The parties will conform to the code of ethics of their respective national professional associations.

ARTICLE XXIV - CHANGES IN SCOPE OR SCHEDULE OR SERVICES

Changes mutually agreed upon by the County and the Subrecipient, will be incorporated into this agreement by written amendments signed by both parties.

Unilateral modification of the agreement may take place by the County if the underlying programmatic legislation or regulations are changed by the federal government. If this unilateral modification is objectionable to the Subrecipient, it may withdraw from receiving further federal financial assistance under this agreement by giving (thirty) 30 days written notice to the County.

The Subrecipient agrees to inform the County in writing concerning any proposed changes of dates, budget, or services indicated in this agreement, as well as changes of address or personnel affecting this agreement. Changes in dates, budget, or services are subject to prior written approval of the County.

ARTICLE XXV - CHOICE OF LAW AND FORUM

This agreement is to be interpreted by the laws of the State of Michigan. The parties agree that the proper forum for any disputes or litigation arising out of this agreement is in Washtenaw County, Michigan.

ARTICLE XXVI - EXTENT OF AGREEMENT

This written agreement, including any attachments thereto, represents the entire agreement between the parties and supersedes all prior representations, negotiations or agreements whether written or oral.

ARTICLE XXVII – PRIVITY / THIRD PARTIES

This agreement is solely between the County and Subrecipient. No other parties are part of this agreement. This agreement is not intended to make any person or entity, not a party to this agreement, a third party beneficiary hereof or to confer on a third party any rights or obligations enforceable in their favor.

ARTICLE XXVIII - SEVERABILITY

The invalidity or unenforceability of any provisions of this agreement shall not affect the validity or enforceability of any other provision of this agreement, which shall remain in full force and effect.

ARTICLE XXIX - NOTICES

Communication notices for this agreement may be delivered via electronic mail, U.S. mail, hand delivery, or fax.

The individual or officer signing this agreement certifies by his or her signature that he or she is authorized to sign this agreement on behalf of the organization he or she represents. By signing this agreement, the County and the Subrecipient agree to comply with all of the requirements specified in this agreement.

ATTESTED TO:

By: Lawrence Kestenbaum 01/19/2023
Signed by Deputy E Gotembiewski for L Gestenbaum

Lawrence Kestenbaum (DATE)
County Clerk/Register

WASHTENAW COUNTY (Pass-Through Entity)

By: Gregory Dill 01/17/2023

Gregory Dill (DATE)
County Administrator

Contract # 54519

APPROVED AS TO CONTENT:

By: Alize Asberry Payne 01/09/2023
Alize Asberry Payne (DATE)
Director, Racial Equity Office

Supreme Felons, Inc.

BY: Billy Cole 01/09/2023
Billy Cole (DATE)
Executive Director

APPROVED AS TO FORM:

By: Michelle K. Billard 01/17/2023
Office of Corporation Counsel
Michelle K. Billard (DATE)
Office of Corporation Counsel

Contract # 54519

OMB Approval No. 0348-0040

STANDARD ASSURANCES - NON-CONSTRUCTION PROGRAMS

Note: Certain of these assurances may not be applicable to your project or program. If you have questions, please contact the awarding agency. Further, certain Federal awarding agencies may require applicants to certify to additional assurances. If such is the case, you will be notified.

As the duly authorized representative of the applicant, I certify that the applicant:

1. Has the legal authority to apply for Federal assistance and the institutional, managerial and financial capability (including funds sufficient to pay the non-Federal share of project cost) to ensure proper planning, management and completion of the project described in this application.

2. Will give the awarding agency, the Comptroller General of the United States and, if appropriate, the State, through any authorized representative, access to and the right to examine all records, books, papers, or documents related to the award; and will establish a proper accounting system in accordance with generally accepted accounting standards or agency directives.

3. Will establish safeguards to prohibit employees from using their positions for a purpose that constitutes or presents the appearance of personal or organizational conflict of interest, or personal gain.

4. Will initiate and complete the work within the applicable time frame after receipt of approval of the awarding agency.

5. Will comply with the Intergovernmental Personnel Act of 1970 (42 U.S.C. §§4728-4763) relating to prescribed standards for merit systems for programs funded under one of the 19 statutes or regulations specified in Appendix A of OPM's Standards for a Merit System of Personnel Administration (5 C.F.R. 900, Subpart F).

6. Will comply with all Federal statutes relating to nondiscrimination. These include but are not limited to: (a) Title VI of the Civil Rights Act of 1964 (P.L. 88-352) which prohibits discrimination on the basis of race, color or national origin; (b) Title IX of the Education Amendments of 1972, as amended (20 U.S.C. §§1681-1683, and 1685-1686), which prohibits discrimination on the basis of sex; (c) Section 504 of the Rehabilitation Act of 1973, as amended (29 U.S.C. §794), which prohibits discrimination on the basis of handicaps; (d) the Age Discrimination Act of 1975, as amended (42 U.S.C. §§6101-6107), which prohibits discrimination on the basis of age; (e) the Drug Abuse Office and Treatment Act of 1972 (P.L. 92-255), as amended, relating to nondiscrimination on the basis of drug abuse; (f) the Comprehensive Alcohol Abuse and Alcoholism Prevention, Treatment and Rehabilitation Act of 1970 (P.L. 91-616), as amended, relating to nondiscrimination on the basis of alcohol abuse or alcoholism; (g) §§523 and 527 of the Public Health Service Act of 1912 (42 U.S.C. §§290 dd-3 and 290 ee 3), as amended, relating to confidentiality of alcohol and drug abuse patient records; (h) Title VIII of the Civil Rights Act of 1968 (42 U.S.C. §§3601 et seq.), as amended, relating to nondiscrimination in the sale, rental or financing of housing; (i) any other nondiscrimination provisions in the specific statute(s) under which application for Federal assistance is being made; and, (j) the requirements of any other nondiscrimination statute(s) which may apply to the application.

7. Will comply, or has already complied, with the requirements of Titles II and III of the Uniform Relocation Assistance and Real Property Acquisition Policies Act of 1970 (P.L. 91-646) which provide for fair and equitable treatment of persons displaced or whose property is acquired as a result of Federal or federally-assisted programs. These requirements apply to all interests in real property acquired for project purposes regardless of Federal participation in purchases.

8. Will comply, as applicable, with provisions of the Hatch Act (5 U.S.C. §§1501-1508 and 7324-7328) which limit the political activities of employees whose principal employment activities are funded in whole or in part with Federal funds.

9. Will comply, as applicable, with the provisions of the Davis- Bacon Act (40 U.S.C. §§276a to 276a-7), the Copeland Act (40 U.S.C. §276c and 18 U.S.C. §874), and the Contract Work Hours and Safety Standards Act (40 U.S.C. §§327- 333), regarding labor standards for federally-assisted construction sub-agreements.

10. Will comply, if applicable, with flood insurance purchase requirements of Section 102(a) of the Flood Disaster Protection Act of 1973 (P.L. 93-234)

which requires recipients in a special flood hazard area to participate in the program and to purchase flood insurance if the total cost of insurable construction and acquisition is $10,000 or more.

11. Will comply with environmental standards which may be prescribed pursuant to the following: (a) institution of environmental quality control measures under the National Environmental Policy Act of 1969 (P.L. 91-190) and Executive Order (EO) 11514; (b) notification of violating facilities pursuant to EO 11738; (c) protection of wetlands pursuant to EO 11990; (d) evaluation of flood hazards in floodplains in accordance with EO 11988; (e) assurance of project consistency with the approved State management program developed under the Coastal Zone Management Act of 1972 (16 U.S.C. §§1451 et seq.); (f) conformity of Federal actions to State (Clean Air) Implementation Plans under Section 176(c) of the Clean Air Act of 1955, as amended (42 U.S.C. §§7401 et seq.); (g) protection of underground sources of drinking water under the Safe Drinking Water Act of 1974, as amended (P.L. 93-523); and, (h) protection of endangered species under the Endangered Species Act of 1973, as amended (P.L. 93- 205).

12. Will comply with the Wild and Scenic Rivers Act of 1968 (16 U.S.C. §§1271 et seq.) related to protecting components or potential components of the national wild and scenic rivers system.

13. Will assist the awarding agency in assuring compliance with Section 106 of the National Historic Preservation Act of 1966, as amended (16 U.S.C. §470), EO 11593 (identification and protection of historic properties), and the Archaeological and Historic Preservation Act of 1974 (16 U.S.C. §§469a-1 et seq.).

14. Will comply with P.L. 93-348 regarding the protection of human subjects involved in research, development, and related activities supported by this award of assistance.

15. Will comply with the Laboratory Animal Welfare Act of 1966 (P.L. 89-544, as amended, 7 U.S.C. §§2131 et seq.) pertaining to the care, handling, and treatment of warm blooded animals held for research, teaching, or other activities supported by this award of assistance.

16. Will comply with the Lead-Based Paint Poisoning Prevention Act (42 U.S.C. §§4801 et seq.) which prohibits the use of lead-based paint in construction or rehabilitation of residence structures.

17. Will cause to be performed the required financial and compliance audits in accordance with the Uniform Administrative Requirements, Cost Principles, and Audit Requirements for Federal Awards (2 CFR Chapter I, and Chapter II, Parts 200, 215, 220, 225, 230) issued December 26, 2013 by the Executive Office of the President, Office of Management and Budget.

18. Will comply with all applicable requirements of all other Federal laws, executive orders regulations, and policies governing this program.

19. Will comply with the requirements of Section 106(g) of the Trafficking Victims Protection Act (TVPA) of 2000, as amended (22 U.S.C. 7104) which prohibits grant award recipients or a sub-recipient from (1) Engaging in severe forms of trafficking in persons during the period of time that the award is in effect (2) Procuring a commercial sex act during the period of time that the award is in effect or (3) Using forced labor in the performance of the award or subawards under the award.

Billy Cole

Signature of Subrecipient's Authorized Representative

Supreme Felons Inc

Name of Subrecipient Organization

President/CEO

Title of Subrecipient's Authorized Representative

01/09/2023

Date Submitted

Contract # 54519

CERTIFICATIONS REGARDING LOBBYING; DEBARMENT, SUSPENSION AND OTHER RESPONSIBILITY MATTERS; AND DRUG-FREE WORKPLACE REQUIREMENTS

Applicants should refer to the regulations cited below to determine the certification to which they are required to attest. Applicants should also review the instructions for certification included in the regulations before completing this form. Signature of this form provides for compliance with certification requirements under 34 CFR Part 82, "New Restrictions on Lobbying," and 34 CFR Part 85, "Government-wide Debarment and Suspension (Non-procurement) and Government-wide Requirements for Drug-Free Workplace (Grants)." The certifications shall be treated as a material representation of fact upon which reliance will be placed when Washtenaw County determines to award the covered transaction, grant, or cooperative agreement.

1. **LOBBYING**

As required by Section 1352, Title 31 of the U.S. Code, and implemented at 34 CFR Part 82, for persons entering into a grant or cooperative agreement over $100,000, as defined at 34 CFR Part 82, Sections 82.105 and 82.110, the applicant certifies that:

(a) No Federal appropriated funds have been paid or will be paid, by or on behalf of the undersigned, to any person for influencing or attempting to influence an officer or employee of any agency, a Member of Congress, an officer or employee of Congress, or an employee of a Member of Congress in connection with the making of any Federal grant, the entering into of any cooperative agreement, and the extension, continuation, renewal, amendment, or modification of any Federal grant or cooperative agreement;

(b) If any funds other than Federal appropriated funds have been paid or will be paid to any person for influencing or attempting to influence an officer or employee of any agency, a Member of Congress, an officer or employee of Congress, or an employee of a Member of Congress in connection with this Federal grant or cooperative agreement, the undersigned shall complete and submit Standard Form - LLL, "Disclosure Form to Report Lobbying," in accordance with its instructions;

(c) The undersigned shall require that the language of this certification be included in the award documents for all subawards at all tiers (including subgrants, contracts under grants and cooperative agreements, and subcontracts) and that all subrecipients shall certify and disclose accordingly.

2. **DEBARMENT, SUSPENSION, AND OTHER RESPONSIBILITY MATTERS**

As required by Executive Order 12549, Debarment and Suspension, and implemented at 34 CFR Part 85, for prospective participants in primary covered transactions, as defined at 34 CFR Part 85, Sections 85.105 and 85.110—

A. The applicant certifies that it and its principals:

(a) Are not presently debarred, suspended, proposed for debarment, declared ineligible, or voluntarily excluded from covered transactions by any Federal department or agency;

(b) Have not within a three-year period preceding this application been convicted of or had a civil judgment rendered against them for commission of fraud or a criminal offense in connection with obtaining, attempting to obtain, or performing a public (Federal, State, or local) transaction or contract under a public transaction; violation of Federal or State antitrust statutes or commission of embezzlement, theft, forgery, bribery, falsification or destruction of records, making false statements, or receiving stolen property;
(c) Are not presently indicted for or otherwise criminally or civilly charged by a governmental entity (Federal, State, or local) with commission of any of the offenses enumerated in paragraph (2)(b) of this certification; and

(d) Have not within a three-year period preceding this application had one or more public transaction (Federal, State, or local) terminated for cause or default; and

B. Where the applicant is unable to certify to any of the statements in this certification, he or she shall attach an explanation to this application.

3. **DRUG-FREE WORKPLACE (GRANTEES OTHER THAN INDIVIDUALS)**

As required by the Drug-Free Workplace Act of 1988, and implemented at 34 CFR Part 85, Subpart F, for grantees, as defined at 34 CFR Part 85, Sections 85.605 and 85.610 –

A. The applicant certifies that it will or will continue to provide a drug-free workplace by:

(a) Publishing a statement notifying employees that the unlawful manufacture, distribution, dispensing, possession, or use of a controlled substance is prohibited in the grantee's workplace and specifying the actions that will be taken against employees for violation of such prohibition;

(b) Establishing an on-going drug-free awareness program to inform employees about:

(1) The dangers of drug abuse in the workplace;

(2) The grantee's policy of maintaining a drug-free workplace;

(3) Any available drug counseling, rehabilitation, and employee assistance programs; and

(4) The penalties that may be imposed upon employees for drug abuse violations occurring in the workplace;

(c) Making it a requirement that each employee to be engaged in the performance of the grant be given a copy of the statement required by paragraph (a);

(d) Notifying the employee in the statement required by paragraph (a) that, as a condition of employment under the grant, the employee will:

(1) Abide by the terms of the statement; and

(2) Notify the employer in writing of his or her conviction for a violation of a criminal drug statute occurring in the workplace no later than five calendar days after such conviction; (e) Notifying the agency, in writing, within 10 calendar days after receiving notice under subparagraph (d)(2) from an employee or otherwise receiving actual notice of such conviction. Employers of convicted employees must provide notice, including position title, to: Washtenaw County Administrator's Office, 220 N. Main, P.O. Box 8645, Ann Arbor, MI 48107-8645. Notice shall include the identification number(s) of each affected grant;

(f) Taking one of the following actions, within 30 calendar days of receiving notice under subparagraph (d)(2), with respect to any employee who is so convicted:

(1) Taking appropriate personnel action against such an employee, up to and including termination, consistent with the requirements of the Rehabilitation Act of 1973, as amended; or (2) Requiring such employee to participate satisfactorily in a drug abuse assistance or rehabilitation program approved for such purposes by a Federal, State, or local health, law enforcement, or other appropriate agency;

(g) Making a good faith effort to continue to maintain a drug-free workplace through implementation of paragraphs (a), (b), (c), (d), (e), and (f).

B. The grantee may insert in the space provided below the site(s) for the performance of work done in connection with the specific grant:

Place of Performance (Street address. city, county, state, zip code)

Check [ ] if there are workplaces on file that are not identified here.

DRUG-FREE WORKPLACE
(GRANTEES WHO ARE INDIVIDUALS)

As required by the Drug-Free Workplace Act of 1988, and implemented at 34 CFR Part 85, Subpart F, for grantees, as defined at 34 CFR Part 85, Sections 85.605 and 85.610-

A. As a condition of the grant, I certify that I will not engage in the unlawful manufacture, distribution, dispensing, possession, or use of a controlled substance in conducting any activity with the grant; and

B. If convicted of a criminal drug offense resulting from a violation occurring during the conduct of any grant activity, I will report the conviction, in writing, within 10 calendar days of the conviction, to: Washtenaw County Administrator's Office, 220 N. Main, P.O. Box 8645, Ann Arbor, MI 48107-8645. Notice shall include the identification number(s) of each affected grant.

As the duly authorized representative of the applicant, I hereby certify that the applicant will comply with the above certifications.

Supreme Felons Inc

Name of Subrecipient Organization

Billy Cole President/CEO

Printed Name and Title of Subrecipient's Authorized Representative

Billy Cole

Signature of Subrecipient's Authorized Representative

01/09/2023

Date

Contract # 54519

Subrecipient Audit Certification

Federal Audit Requirements - Fiscal Years Beginning After December 26, 2014

Non-federal organizations which expend $750,000 or more in federal funds during their fiscal year are required to have a Single Audit performed in accordance with the Uniform Administrative Requirements, Cost Principles, and Audit Requirements for Federal Awards (2 CFR Chapter I, and Chapter II, Parts 200, 215, 220, 225, 230) issued December 26, 2013 by the Executive Office of the President, Office of Management and Budget. Subrecipients must submit their audit report to the Federal Audit Clearinghouse within the earlier of 30 days after receipt of the auditor's report, or within 9 months after the end of the audit period for each year the Subrecipient meets the $750,000 federal expenditure threshold.

Program: _____ CFDA Number: 21.027

Subrecipient Information:

Organization Name: Supreme Felons

Street Address: 218 N Adams St

City, State, Zip Code: Ypsilanti MI 48197

Independent Audit Firm: n/a

Certification for Fiscal Year Ending (mm/dd/yyyy): _____

(Check appropriate box):

☒ I certify that the Subrecipient shown above **does not expect** to expend $750,000 or more in federal funds during at least one fiscal year that funds are received for the above listed program and thus it will not be required to have a Single Audit performed under the Uniform Administrative Requirements, Cost Principles, and Audit Requirements for Federal Awards (2 CFR Chapter I, and Chapter II, Parts 200, 215, 220, 225, 230) issued December 26, 2013 by the Executive Office of the President, Office of Management and Budget, for the above listed program.

☐ Icertify that the Subrecipient shown above **expects it will** expend $750,000 or more in federal funds during at least one fiscal year that funds are received for the above listed program and thus it will be required to have a Single Audit performed under the Uniform Administrative Requirements, Cost Principles, and Audit Requirements for Federal Awards (2 CFR Chapter I, and Chapter II, Parts 200, 215, 220, 225, 230) issued December 26, 2013 by the Executive Office of the President, Office of Management and Budget.

Billy Cole
Signature of Subrecipient's Authorized Representative

01/09/2023
Date

For Washtenaw County Use Only

Reviewed By: _____ Date: _____

Contract # 54519

ATTACHMENT A

Subrecipient Identification Information Required:

1. One of the following
    a. DUNNs number
    b. TIN – Tax identification number
    c. UEI – Unique Entity Identifier created in SAM.gov
2. Full name
3. Point of contact email address. This is optional but strongly preferred.
4. Full address
5. Primary place of performance
6. The US Treasury reporting portal requires that an entity receiving federal funds must acknowledge whether they are registered with SAM.gov and will maintain a current profile.
   Please confirm your current registration in SAM.gov. Yes or No
   Please provide your SAM Unique Entity I.D. _____

   If you are not registered, you will be requested to complete a questionnaire that collects your response to questions required by SAM.gov. If you choose to create an account in SAM.gov go to https://sam.gov/content/entity-registration and follow the instructions. There is no charge to register.

Quarterly Data Reporting Requirements:

There is required quarterly reporting with this subrecipient agreement. All awardees are required to provide the following information by no later than the 15th of the month following the end of a quarter. Due dates are April 15, July 15, October 15, and January 15 for all years the agreement is active.

Standard Data Elements for All Projects:

1. Project expenditure category group and category.
   This information will be included in the agreement for clear identification of award.
2. Project name.
   This information will be included in the agreement, taken from the application
3. Status of completion. Provided by subrecipient.
    a. Not Started
    b. Completed less than 50%
    c. Completed more than 50%
    d. Completed
4. Adopted budget - approved award amount
6. Total expenditure – actual expense through the end of the quarter being reported.

There is additional programmatic data that is required based on the expenditure category (EC) that your project is classified in as provided by the U.S. Treasury. Below is the data that will be required to be provided in each quarterly report.

Community Priority Fund projects categories included in required reporting:

- Community Violence Interventions (EC 1.11)
- Addressing Educational Disparities(EC 2.24 - 2.27)
- Expanding Early Childhood Education (EC 2.11)
- Direct Assistance to Households Program (EC 2.1 – 2.8)
- Addressing Housing and Homelessness (EC 2.15 – 2.18)

Programmatic Data:

- Brief description of structure and objectives of assistance program(s), including public health or negative economic impact experienced

- Brief description of how a recipient's approach is reasonable and proportional to a public health or negative economic impact of COVID-19 as described in the final rule.

- For Direct Assistance to Households, expense category 2.1 – 2.8 report
  - Number of households served (by program if recipient establishes multiple separate household assistance programs)

- Addressing Housing and Homelessness, expense categories 2.15 – 2.18 and Assistance to Households expense category 2.2 only report:
  - Number of households receiving eviction prevention services, including legal representation
  - Number of affordable housing units preserved or developed

- For Community Violence Interventions expense category 1.11 report:
  - Number of workers enrolled in sectorial job training programs
  - Number of workers completing sectoral job training programs
  - Number of people participating in summer youth employment programs

- For Addressing Educational Disparities, expense categories 2.24 - 2.26 report
  - Number of students participating in evidence-based tutoring programs

- For Expanding Early Childhood Education expense category 2.11 report
  - Number of children served by childcare and early learning services (pre-school/pre-K/ages 3-5)
  - Number of families serv ed by home visiting

Use of Evidence:

- The dollar amount of the total project spending that is allocated towards evidence-based interventions.
- Is a program evaluation of the project is being conducted? Yes or No

Project Demographic Distribution (EC 1.1 – 2.37):

Recipients must report whether certain types of projects are targeted to impacted and disproportionately impacted communities. Recipients will be asked to respond to the following:

a. What Impacted and/or Disproportionally Impacted population does this project primarily serve? Please identify the population primarily served.

b. If this project primarily serves more than one Impacted and/or Disproportionately Impacted population, please select up to two additional populations served.

Please select from the following options:

	Impacted	Disproportionately Impacted
Assistance to Households	• Low- or-moderate income households or populations [12] • Households that experienced Unemployment • Households that experienced increased food or housing insecurity • Households that qualify for certain federal programs [13] • For services to address lost instructional time in K-12 schools: any students that lost access to in-person instruction for a significant period of time • Other households or populations that experienced a negative economic impact of the pandemic other than those listed above (please specify)	• Low-income households and Populations [14] • Households and populations residing in Qualified Census Tracts • Households that qualify for certain federal programs [15] • Households receiving services provided by Tribal governments • Households residing in the U.S. territories or receiving services from these governments • For services to address educational disparities, Title I eligible schools [16] • Other households or populations that experienced a disproportionate negative economic impact of the pandemic other than those listed above (please specify)

[12] Low or moderate-income households and communities are those with (i) income at or below 300 percent of the Federal Poverty Guidelines for the size of the household based on the most recently published poverty guidelines by the Department of Health and Human Services (HHS) or (ii) income at or below 65 percent of the Area Median area median income for the county and size of household based on the most recently published data by the Department of Housing and Urban Development (HUD).

13 For Impacted households, these programs are Children's Health Insurance Program ("CHIP"); Childcare Subsidies through the Child Care and Development Fund ("CCDF") Program; Medicaid; National Housing Trust Fund ("HTF"), for affordable housing programs only; Home Investment Partnerships Program ("HOME"), for affordable housing programs only.

14 Low-income households and communities are those with (i) income at or below 185 percent of the Federal Poverty Guidelines for the size of the household based on the most recently published poverty guidelines by HHS or (ii) income at or below 40 percent of Area Median Income for its county and size of household based on the most recently published data by HUD.

15 For Disproportionately Impacted households, these programs are Temporary Assistance for Needy Families ("TANF"), Supplemental Nutrition Assistance Program ("SNAP"), Free- and Reduced-Price Lunch ("NSLP") and/or School Breakfast ("SBP") programs, Medicare Part D Low-Income Subsidies, Supplemental Security Income ("SSI"), Head Start, Special Supplemental Nutrition Program for Women, Infants, and Children ("WIC"), Section 8 Vouchers, Low-Income Home Energy Assistance Program ("LIHEAP"), and Pell Grants.

16 For educational services and other efforts to address educational disparities, Treasury will recognize Title I eligible schools as disproportionately impacted and responsive services that support the school generally or support the whole school service as eligible. "Title I eligible schools" means schools eligible to receive services under section 1113 of Title I, Part A of the Elementary and Secondary Education Act of 1965, as amended (20 U.S.C. 6313), including schools served under section 1113(b)(1)(C) of that Act.

Contract # 54519

Community Priority Fund

Supreme Felons, INC.
Exhibit B: Budget

Category	Amount			Description (PER YEAR)
	2023	2024	TOTAL	
PERSONNEL				
Payroll and fringes (wages, FICA, & benefits)	$ 342,994	$ 367,307	$ 710,301	Program Director; Program coordinators; Mentors; Community violence specialists; Dispatch patrol; Mentors; Administrative assistant
Volunteers	$ 10,000	$ 10,000	$ 20,000	10 x $ 1,000 stipends
PROGRAM IMPLEMENTATION				
Temporary housing assistance	$ 45,000	$ 45,000	$ 90,000	100 ppl x 3 nights x $150/night
Food assistance	$ 9,000	$ 9,000	$ 18,000	100 ppl x 3 days x $30/day
Bus tokens	$ 1,500	$ 1,500	$ 3,000	100 ppl x 3 tokens x $5/token x 1/week
Phone/plan for one month	$ 5,300	$ 5,300	$ 10,600	100 ppl x $53 (includes taxes)
Hygiene kits	$ 1,500	$ 1,500	$ 3,000	100 ppl x $15/kit
Field trips	$ 3,204	$ 3,204	$ 6,408	24 ppl x 4 field trips/year (entrance fees, food)
Professional Community Violence Prevention Specialist training	$ 9,230	$ 9,230	$ 18,460	Conduct Professional Community Violence Prevention Specialist trainings (includes training materials, food, and training facilities)
Event hosting (1)	$3,400	$ 3,400	$ 6,800	Monthly guest speaker presentations (stipends for guest speakers for two programs; clean up)
Event hosting (2)	$ 2,500	$ 2,500	$ 5,000	Hot Meals to Senior Citizens events during the Holidays (Thanksgiving & Christmas)
OTHER DIRECT COST				
Occupancy	$ 18,000	$ 18,000	$ 36,000	Approx. monthly rental cost $1,500
Office utilities	$ 9,600	$ 9,600	$ 19,200	
Office furniture	$ 12,000	0	$ 12,000	Desks, conference table, chairs
Electronic equipment & software	$ 5,110	$ 3,110	$ 8, 220	Laptops, iPads, Smart Sheets
Communication equipment	$ 500	0	$ 500	Walkie talkie set
Office supplies	$ 1,500	$ 1,500	$ 3,000	
Background checks	$ 900	$ 327	$ 1,227	Staff & volunteers
HAVI (CVI) Training	0	$ 15,000	$ 15,000	5 ppl X $ 3,000 (conference fees & travel)
Marketing	$ 600	$ 600	$ 1,200	T shirts - apparel
Professional development	0	$ 15,000	$ 15,000	HAVI (CVI) Training and travel expense for 5 people
Consulting services	$ 40, 873	$ 40,872	$ 81,745	Legal services for ARPA Program related activities; Financial management; Accounting; other
Transportation	$ 6,200	$ 6,200	$ 12,400	Breakout gas directly tie to van, gas gift cards for volunteers, mileage for employees using personal cars
Capital Purchase: Vehicle	$ 62,000	0	$ 62,000	> 6-person capacity. e.g., van
Subtotal	**$ 595,787**	**$ 558,014**	**$1,153,800**	

	2023	2024	TOTAL	DESCRIPTION
INDIRECT COSTS				
Legal services	$ 9,000	$ 9,000	$ 18,000	Organization-wide activities
Tax Preparation	$ 1,700	$ 1,700	$ 3,400	
Accounting software	$ 930	$ 930	$ 1,860	QuickBooks-payroll, bookkeeping, timekeeping
Insurance	$ 5,000	$ 5,000	$ 10,000	General liability, workers' compensation, vehicle insurance coverage
Communication services	$ 820	$ 820	$ 1,640	Land-line phone, email
Website hosting	$ 300	$ 300	$ 600	
Drug Test lab API	$ 5,350	$ 5,350	$ 10,700	
Subtotal	**$ 23,100**	**$ 23,100**	**$ 46,200**	
TOTAL	**$ 618,887**	**$ 581,114**	**$ 1,200,000**	

2. Use of funds

The Subrecipient agrees to only incur costs under this agreement which are eligible under the Cost Principles detailed in Section 200.400-475 of the Uniform Guidance.

3. Revision of Budget and Program Plans 2 CFR 200.308

Any revisions to the budget or proposed use of funds from those outlined in this scope of work or the original proposal must receive prior approval in writing from the County.

EXHIBIT C

COUNTY ADMINISTRATOR

220 NORTH MAIN STREET, P.O. BOX 8645
ANN ARBOR, MICHIGAN 48107-8645

May 3, 2023

Greetings Brenda,

Thank you for your communication, dated April 4, 2023. I appreciate your communicating your board's concerns around public safety, particularly as related to the County's Community Priority Fund awardee, Supreme Felons, Inc. (SFI) I have met with both the leadership of SFI and with Sheriff Clayton to gain some clarity around their mission, purpose, activities, and the contract that they have signed with Washtenaw County.

SFI does violence intervention and prevention work, not law enforcement. Their program is called the "*Community Advocates for Non-Violent Neighborhood Support Program*". Their goal is to help address disputes and resolve conflicts before they rise to the level of law enforcement. They are a credible, trusted presence in neighborhoods, identified by data, as areas where violent crime has been historically more prevalent. Two of those neighborhoods are in Ypsilanti Township (Sugarbrook and Appleridge). SFI are akin to a traditional neighborhood watch program: extra eyes on the streets on days and during hours where violent crimes tend to take place. They observe, mediate, mentor, and connect residents to social service resources. They are trained to call law enforcement and they do encourage residents to call 9-11 when situations warrant it.

Supreme Felons, Inc. is NOT a law enforcement agency. They are not intended to or contracted to provide law enforcement services in lieu of certified Washtenaw County Sheriff's Deputies. They are not a part of the PSU framework for Ypsilanti Township. They are not and will not be dispatched by the Sheriff's office to respond to calls for service. They do not interfere with law enforcement operations. They do not question suspects or disturb police investigations when deputies are called to a scene.

SFI's methods, and Sheriff Clayton agrees, are aligned with national best practices for community violence intervention. Their contract adheres to federal ARPA approved use of funds and monitoring guidelines and to county contracting policies. We provide regular fiscal and programmatic monitoring, and they must maintain compliance to continue receiving funding from their grant award.

If you have additional questions or concerns, please do not hesitate to reach out to me directly,

Best,

Greg

EXHIBIT D

Township Supervisor
Brenda L. Stumbo
Township Clerk
Heather Jarrell Roe
Township Treasurer
Stan Eldridge

YPSILANTI TOWNSHIP
— OFFICE OF THE SUPERVISOR —

Trustees
Ryan Hunter
John Newman II
Gloria Peterson
Debbie Swanson

April 4, 2023

Greg,

Thank you for meeting with Treasurer Stan Eldridge, Clerk Heather Jarrell Roe and myself last week. We discussed and expressed our concerns with the new grant application process for Washtenaw County Sheriff Police Services. We further discussed that this is a change in the middle of the millage term that began in 2018. Additionally, all of the municipalities who contract for police services need to apply for grants, then communities who have their own police department and receive millage dollars should also have to use the same "grant" mechanism.

We believe that all communities should be treated equally in regard to the millage dollars and public safety. We are concerned that this structural shift could lead to the county funding public safety less, and also places our tax payers in a difficult place. What will the county do if the millage does not go to the ballot again, what if the language is changed, and how will that impact all of the municipalities in the county? From our perspective, the structural change seems short sighted and we urge you to consider our concerns.

Another issue that was discussed by our Board of Trustees was, Supreme Felons Inc. establishing a dispatch and patrol in 4 neighborhoods in zip codes 48197/48198. Board members raised a number of concerns including liability as it relates to the dispatch and patrol systems that are listed in the contract with Supreme Felons Inc. Ypsilanti Township contracts for almost $6,000,000 for services with Washtenaw County Sheriff for state level certified (MCOLES) law enforcement officers. Our board strongly recommends that we only use MCLOES certified deputies for patrol in our community and not utilize Supreme Felons Inc. for these services.

An additional concern that was raised is how and why Ypsilanti Township zip codes were selected? Violence interruption should occur county wide. This further stigmatizes and portrays our community as being unsafe, when in reality violent crimes occur everywhere in our county.

Finally, we discussed our concern with the need for information on the cost of police service unit (PSU). It has been requested of Sheriff Clayton, by Trustee Newman, for a meeting date, and that has not been acted upon. We are wondering if the county could assist in getting the detailed costs for our Police Committee to review. The cost of a PSU has not been evaluated for over a decade.

Sincerely,

Brenda L. Stumbo
Township Supervisor

Heather Jarrell Roe
Township Clerk

Stan Eldridge
Township Treasurer

McLAIN & WINTERS

ATTORNEYS AND COUNSELORS AT LAW
61 N. HURON
YPSILANTI, MICHIGAN 48197
OFFICE (734) 481-1120
FAX (734) 481-8909
EMAIL: mcwinlaw@gmail.com

DENNIS O. McLAIN
WM. DOUGLAS WINTERS
PAUL BARNETT

OF COUNSEL
ANGELA B. KING

August 5, 2023

Brenda L. Stumbo, Supervisor
Heather Jarrell Roe, Clerk
Stan Eldridge, Treasurer
Charter Township of Ypsilanti
7200 S. Huron River Drive
Ypsilanti, MI 48197

Re: *Resolution 2023-07*

Dear Board Members:

In accordance with the Board's previous directive, please find attached Resolution 2023-07 along with a number of exhibits in support thereof so as to allow the same to be considered by the Ypsilanti Township Board of Trustees at its regular meeting scheduled for Tuesday, ***August 15, 2023***. If after review of this correspondence and attachments you have any questions or I can be of further assistance, please contact me.

Very truly yours,

Wm. Douglas Winters

Wm. Douglas Winters
/js
cc: Trustees
Dennis O. McLain

Michigan Department of Treasury
614 (Rev. 01-23)

ORIGINAL TO: County Clerk(s)
COPY TO: Equalization Department(s)
COPY TO: Each township or city clerk

L-4029

2023 Tax Rate Request (This form must be completed and submitted on or before September 30, 2023)

MILLAGE REQUEST REPORT TO COUNTY BOARD OF COMMISSIONERS

Carefully read the instructions on page 2.

This form is issued under authority of MCL Sections 211.24e, 211.34 and 211.34d. Filing is mandatory; Penalty applies.

County(ies) Where the Local Government Unit Levies Taxes	2023 Taxable Value of ALL Properties in the Unit as of 5-22-2023
Washtenaw	**TV 1,707,521,570 (TV minus Renaissance Zone) 1,680,496,116**
Local Government Unit Requesting Millage Levy	For LOCAL School Districts: 2023 Taxable Value excluding Principal Residence, Qualified Agricutlural, Qualified Forest, Industrial Personal and Commercial Personal Properties.
Charter Township of Ypsilanti	

This form must be completed for each unit of government for which a property tax is levied. Penalty for non-filing is provided under MCL Sec 211.119. The following tax rates have been authorized for levy on the 2023 tax roll.

(1) Source	(2) Purpose of Millage	(3) Date of Election	(4) Original Millage Authorized by Election Charter, etc.	(5) ** 2022 Millage Rate Permanently Reduced by MCL 211.34d "Headlee"	(6) 2023 Current Year "Headlee" Millage Reduction Fraction	(7) 2023 Millage Rate Permanently Reduced by MCL 211.34d "Headlee"	(8) Sec. 211.34 Truth in Assessing or Equalization Millage Rollback Fraction	(9) Maximum Allowable Millage Levy *	(10) Millage Requested to be Levied July 1	(11) Millage Requested to be Levied Dec. 1	(12) Expiration Date of Millage Authorized
Allocated	GEN OP	N/A	1.1160	.9797	1.0000	.9797	1.0000	.9797		.9797	N/A
Voted	Fire Prot	08/03/21	3.1250	3.0850	1.0000	3.0850	1.0000	3.0850		3.0850	12/2025
Voted	Solid Waste	08/03/21	2.4050	2.3742	1.0000	2.3742	1.0000	2.3742		2.3742	12/2025
Voted	Police	08/03/21	5.7000	5.6270	1.0000	5.6270	1.0000	5.6270		5.5570	12/2025
Voted	Rec/BP	08/03/21	1.0059	.9930	1.0000	.9930	1.0000	.9930		.9930	12/2025
PA345	FPen/HC	N/A		.8100				.8800		.8800	N/A
Totals				13.8689				13.9389		13.8689	

Prepared by	Telephone Number	Title of Preparer	Date
Javonna Neel	**(734) 544-3601**	**Accounting Director**	

CERTIFICATION: As the representatives for the local government unit named above, we certify that these requested tax levy rates have been reduced, if necessary to comply with the state constitution (Article 9, Section 31), and that the requested levy rates have also been reduced, if necessary, to comply with MCL Sections 211.24e, 211.34 and, for LOCAL school districts which levy a Supplemental (Hold Harmless) Millage, 380.1211(3).

	Signature	Print Name	Date
☒ Clerk ☐ Secretary		**Heather Jarrell Roe**	
☐ Chairperson ☒ President		**Brenda L Stumbo**	

** Under Truth in Taxation, MCL Section 211.24e, the governing body may decide to levy a rate which will not exceed the maximum authorized rate allowed in column 9. The requirements of MCL 211.24e must be met prior to levying an operating levy which is larger than the base tax rate but not larger than the rate in column 9.*

**** IMPORTANT:** See instructions on page 2 regarding where to find the millage rate used in column (5).

Local School District Use Only. Complete if requesting millage to be levied. See STC Bulletin 2 of 2023 for instructions on completing this section.

Total School District Operating Rates to be Levied (HH/Supp and NH Oper ONLY)	Rate
For Principal Residence, Qualified Ag., Qualified Forest and Industrial Personal	
For Commercial Personal	
For all Other	

Township Supervisor
Brenda L. Stumbo
Township Clerk
Heather Jarrell Roe
Township Treasurer
Stan Eldridge

YPSILANTI TOWNSHIP
— HUMAN RESOURCE DEPARTMENT —

Trustees
John Newman II
Gloria Peterson
Debbie Swanson
Jimmie Wilson Jr

MEMORANDUM

To: Charter Township of Ypsilanti Board of Trustees

From: Karen Wallin
Human Resource Manager

Date: August 9, 2023

Subject: Request to fill the Municipal Services Director position with internal candidate, John Hines with a starting salary of $90,000.00/annually.

The position of "**Municipal Services Director"**, was brought to the Township Board on June 20, 2023, for consideration. The job description was revised to reflect the suggestions and concerns that the Board brought forth at the June 20th meeting, and the position was official posted on June 28, 2023, with a closing date of Friday, July 14, 2023.

The position was posted on the Township website, on MLive (Ann Arbor News), the Michigan Municipal League, and MTA sites. We received a total of eight applicants, including one internal candidate. Following review of the applicants, three candidates were selected for interviews. The interviews took place on Monday, August 7th and the interview panel included Supervisor Stumbo, Treasurer Eldridge, and I. We were very fortunate to be able to interview three strong candidates.

Request is being made that the Township Board, approve the promotion of internal candidate, John Hines, to the Municipal Services Director position with a starting salary of $90,000/annually. John has served as interim director for the last eight months and has gained knowledge and experience through his positions of Recreation Coordinator, Recreation Director, Deputy Supervisor, and interim RSD Director. Approval of an additional $5,000 upon John's successful completion of a six-month probationary period is also being requested.

Your consideration in the matter is appreciated. Should you have any additional questions, please contact me at 544-3741 or kwallin@ypsitownship.org.

Township Supervisor
Brenda L. Stumbo
Township Clerk
Heather Jarrell Roe
Township Treasurer
Stan Eldridge

YPSILANTI TOWNSHIP
— WHERE YOUR FUTURE GROWS —

Trustees
John Newman II
Gloria Peterson
Debbie Swanson
Ryan Hunter

MEMORANDUM

To: Charter Township Board of Trustees

From: Police Steering Committee (Treasurer Eldridge, Trustees Newman & Hunter)

CC: Javonna Neal, Accounting Director

Date: August 8, 2023

RE: **Request authorization to approve a contract with Ernat Consulting to assist the Charter Township of Ypsilanti Police Steering Committee in developing a Request for Proposal (RFP), not to exceed $2,500 and budgeted in line #101-272-801.000**

The Charter Township of Ypsilanti Police Steering Committee is requesting the Board of Trustees to approve a Professional Services contract with Ernat Consulting to assist the committee in the development of a Request for Proposal (RFP).

The RFP will designate the "Scope of Work" for the eventually selected consultant, or consulting firm, and would include the determination of the "Actual Costs" for a Police Service Unit (PSU) pursuant to the current police services contract with Washtenaw County. The selected consultant, or consulting firm, would also make a determination and/or an assessment as to whether the creation of a Township police department is a viable option moving forward.

Respectfully submitted,

Police Steering Committee

RESOLUTION 2023-11

APPLICATION FOR LAYING OUT AND DESIGNATING A DRAINAGE DISTRICT

YPSILANTI CHARTER TOWNSHIP

_____ DRAIN

At a regular board meeting of the Ypsilanti Charter Township Board, held in Washtenaw County, State of Michigan on the _____day of _____, 20___, at _____a.m./p.m.

PRESENT:_____

ABSENT:_____

The following resolution was offered by _____and seconded by _____.

WHEREAS, the Township requests the laying out and designating of a county drain drainage district, located in Washtenaw County, pursuant to the Chapter 3 of Public Act 40 of 1956, as amended; and

WHEREAS, the Township has determined that the laying out and designating of the proposed drainage district is necessary for the public health in the Township; and

WHEREAS, the Township will be liable for an assessment at large against it for a percentage of the cost of the proposed drain.

NOW, THEREFORE BE IT RESOLVED THAT, the Township Board does authorize the filing of an application with the Washtenaw County Water Resources Commissioner for the laying out and designating of a drainage district.

BE IT FURTHER RESOLVED THAT the Supervisor is authorized to execute the application for the laying out and designating of a drainage district.

BE IT FURTHER RESOLVED that the Clerk shall forward to the Washtenaw County Water Resources Commissioner a copy of this Resolution for the application for laying out and designating a drainage district.

YPSILANTI CHARTER **TOWNSHIP**

Dated: _____

_____

By: Brenda Stumbo

Its: Supervisor

3RES-MUN

Yeas:
Nays:
Abstain:
Absent:

Resolution No.

I, the undersigned, being duly qualified and acting Clerk of Ypsilanti Charter Township, do hereby certify that the foregoing is a true and complete copy of certain proceedings taken by the Township Board for the Charter Township of Ypsilanti Charter at a regular meeting held on the _____ day of _____, 20__, and that notice of said meeting was given in accordance with the Open Meetings Act.

_____ _____

Heather Jarrell Roe, Clerk
Ypsilanti Charter Township

Date

YPSILANTI CHARTER **TOWNSHIP**

APPLICATION FOR LAYING OUT AND DESIGNATING A DRAINAGE DISTRICT

_____ DRAIN

To the Washtenaw County Water Resources Commissioner:

The undersigned is Ypsilanti Charter Township, Washtenaw County, Michigan. This application has been duly authorized by the governing body of Ypsilanti Charter Township and requests that the _____ Drain Drainage District be laid out and designated under the provisions of Chapter 3 of Public Act 40 of 1956, as amended.

The proposed drain is necessary for the public health, convenience or welfare and is further necessary for the protection of the public health of Ypsilanti Charter Township.

Ypsilanti Charter Township will be liable for an assessment at large against it for a percentage of the cost of the proposed _____ Drain.

The tentative location of the proposed _____ Drain is as follows:

See attached map.

Dated: _____, 2023

_____
By: Brenda Stumbo
Ypsilanti Charter Township Supervisor

_____
By: Heather Jarrell Roe
Ypsilanti Charter Township Clerk

3APP-MUN

PROPOSED DISTRICT BOUNDARY

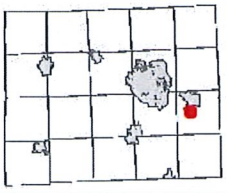

0 200.00 400.0 800.0 Feet

1: 4,800

4/25/2023

Geographic Information System

NOTE: Parcels may not be to scale.

The information contained in this cadastral map is used to locate, identify and inventory parcels of land in Washtenaw County for appraisal and taxing purposes only and is not to be construed as a "survey description". The information is provided with the understanding that the conclusions drawn from such information are solely the responsibility of the user. Any assumption of legal status of this data is hereby disclaimed.

© 2013 Washtenaw County

THIS MAP REPRESENTS PARCELS ATTHE TIME OF PRINTING. THE OFFICIAL PARCEL TAX MAPS ARE MAINTAINED SOLELY BY THE WASHTENAW COUNTY EQUALIZATION DEPARTMENT AND CAN BE OBTAINED BY CONTACTING THAT OFFICE AT 734-222-6662.

AGREEMENT BETWEEN
THE WASHTENAW COUNTY WATER RESOURCES COMMISSIONER
AND
THE CHARTER TOWNSHIP OF YPSILANTI
FOR STORMWATER MASTER PLANNING AT TOWNSHIP OWNED PROPERTY

This Agreement ("Agreement"), made and entered into on the ___ of _____, 2023 by and between the Washtenaw County Water Resources Commissioner's Office ("WCWRC"), and the Charter Township of Ypsilanti ("Township"), a Michigan municipal corporation, for the purpose of providing stormwater master planning services ("Services").

The purpose of the Services are to coordinate "development ready" stormwater infrastructure for Township property commonly referred to as The Seaver Property (Seaver).

Whereas, The Township has a long-standing history of successful collaboration with the WCWRC; and

Whereas, Changing rainfall patterns have affected and will continue to affect stormwater management strategies and design throughout Michigan and the surrounding states; and

Whereas, It will be beneficial to all parties to collaborate on updates to the master planning and ownership of stormwater infrastructure on the Seaver property;

Be it Therefore Resolved, in consideration of the premises and of the mutual undertakings of the parties and in conformity with applicable law, the Township and the WCWRC agree:

1. The Charter Township of Ypsilanti (Township) acknowledges and agrees that due to changing rainfall patterns, additional stormwater infrastructure is required to facilitate full development of the land commonly referred to as the Seaver Property, including provision for additional storage.

2. The Washtenaw County Water Resources Commissioner's Office (WCWRC) agrees to consider the remaining storage capacity of previously constructed stormwater infrastructure serving the Seaver Property as available to any Township property served by said infrastructure, until such time that previously constructed capacity is fully allocated.

3. Township agrees to petition WCWRC for the purpose of:

    a. Creating a stormwater management master plan to identify necessary improvements to facilitate site development.
    b. Determining alternatives and cost estimates for constructing public infrastructure and acquiring necessary easements to convey and store stormwater consistent with the current Rules of the WCWRC.
    c. Acquiring easement over portions of stormwater infrastructure sited on private lands which currently provides service to Township property.

4. The WCWRC shall furnish the appropriate petition documents to the Township to initiate proceedings consistent with Chapter 3 of PA 40 of 1956 (The Drain Code). These proceedings will determine Necessity of improvements then identify a recommended alternative(s) and cost estimates.

5. The WCWRC affirms that consistent with the Drain Code, Township is under no obligation to proceed with implementation unless Township further petitions WCWRC for implementation, consistent with Chapter 4 of the Drain Code.

6. Township shall furnish desired lot configuration to WCWRC. Both parties shall collaborate to keep investment to the minimum necessary to provide public infrastructure and easements consistent with current applicable standards, where said infrastructure will be shared by two or more future property owners, based on the lot configuration furnished by Township.

7. Subsequent to completion of alternative analysis, cost estimates, and discussion with the Township, WCWRC will furnish a Chapter 4 petition form for Township to consider.

8. Township agrees that Township will be responsible for costs incurred as a result of initial petition should Township choose to defer the Chapter 4 petition for implementation.

9. WCWRC and Township agree and understand that a Chapter 4 petition is intended to require private property funding of maintenance in perpetuity.

10. WCWRC and Township agree and understand that a Chapter 4 petition will identify property owner apportionment of capital costs for improvements. Both parties further understand that the Township is not obligated but may choose to fund capital investments based on an initial goal of providing "development-ready" sites.

11. By executing this agreement, Township acknowledges and agrees there will be future limitations on development of Seaver property without public or private investment for stormwater management.

Each of the persons signing this Agreement represents and warrants that he or she has authority to sign this Agreement on behalf of the Washtenaw County Water Resources Commissioner or the Charter Township of Ypsilanti, respectively.

CHARTER TOWNSHIP OF YPSILANTI		WCWRC	
By: _____		By: 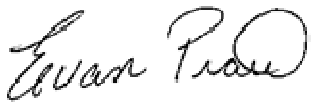	5/17/2023
Brenda Stumbo	(DATE)	Evan N. Pratt, P.E.	(DATE)
Township Supervisor		Water Resources Commissioner	

CHARTER TOWNSHIP OF YPSILANTI FIRE DEPARTMENT
FIRE MARSHAL DIVISION
222 South Ford Boulevard, Ypsilanti, MI 48198

MEMORANUM

To: Brenda Stumbo, Supervisor
Stan Eldridge, Treasurer
Heather Jarrell Roe, Clerk
Board of Trustees

From: Fire Marshal / Interim Chief Steve Wallgren

Date: August 9, 2023

Subject: Preauthorization to purchase the fire departments single source incident reporting software by Image trend. Budgeted under Computer software upgrade in 2023 FY Line item: 206-901-980.001 Computers/Comm/ Furnishings pending contract review by Attorney Winters.

I would like for this Memo to serve as my request for the Board to preapprove up to the budgeted amount of $20,000 for computer software upgrades in line item 206-901-980.001.
Image trend is the reporting software that the Fire Department uses to legally document the incidents that we respond to. This software retains patient information, incident locations and fire scene information for our documentation and certain sections are uploaded to the State of Michigan and Washtenaw County Medical control to track trends.

We have use Image Trend to document our reports for the last several years. We joined with Ann Arbor FD to reduce cost but over the last few years we found that each community has different needs and as a group we were not able to use the software as we saw fit.

Our contract with Image Trend is due for renewal August 31st 2023. Captain Hamilton is our Image Trend coordinator and has been able to decrease the contract amount from an initial quote of $26,992 to $18,083. We are waiting on the contract to confirm these numbers.

Attorney Winters will review the contract prior to purchase of the Image Trend software.

Elite Rescue - Ypsilanti Township

Prepared For

Ypsilanti Township Fire Department

Jerry Hamilton

222 S Ford Blvd

Ypsilanti, MI 48198

Prepared By

Patrick Buchwald

Aug 04, 2023

IMAGETREND®

Quote

IMAGETREND®

Prepared For

Jerry Hamilton
Ypsilanti Township Fire Department
222 S Ford Blvd
Ypsilanti, MI 48198
(734) 544-4225
jhamilton@ttown.org

Bill To

Jerry Hamilton
Ypsilanti Township Fire Department
222 S Ford Blvd
Ypsilanti, MI 48198
(734) 544-4225
jhamilton@ttown.org

Salesperson	Quote Number	Date
Patrick Buchwald, Senior Account Executive, 952-469-6220	QUO-16935-L8J1V	Aug 04, 2023

Description	Qty	Frequency	Unit Price	Total
One-Time Fees				
Elite™ Rescue Setup & Implementation	1	One Time	$2,965.00	$2,965.00
Recurring Fees				
Elite™ Rescue - SaaS *Includes Elite™ Field	1	Recurring	$11,868.00	$11,868.00
Investigations	1	Recurring	$1,500.00	$1,500.00
CAD Distribution	1	Recurring	$1,750.00	$1,750.00
- CAD Vendor: Other CAD Vendor				
			TOTAL Year 1	**$18,083.00**
			***Annual Fees after Year 1**	**$15,118.00**

Prepared By: Patrick Buchwald

Terms of Agreement: The above mentioned items will be invoiced upon Contract signature with payment terms of net 30 days.

- The recurring annual fees will be invoiced annually in advance.
- Project completion occurs upon receipt of the product.
- ImageTrend's license, annual support and hosting are based on up to 5,999 annual incidents as provided by Client.
  *IMAGETREND will perform price increases of the recurring fees. The first price increase will occur with the fees due for year two. These price increases will occur once a year and may not exceed 7% of the price then currently in effect.
- This proposal is valid for 90 days.
- This quote reflects ImageTrend's standard non-CJIS compliant framework, and is provided without any CJIS-related warranties, representations, or contractual commitments. Additional information and pricing for ImageTrend's advanced CJIS compliant offerings are available upon request.
- The estimates set forth herein do not constitute a binding offer or acceptance. This quote does not express the full agreement or understanding of the parties, is subject to additional due diligence and change, and shall not be binding on ImageTrend. The parties do not intend to be legally bound until they enter into definitive agreements regarding the subject matter hereof.
  IMAGETREND will invoice sales tax to non-exempt CLIENTS where applicable
  DISCLAIMER: This quote creates no legal obligations. This letter is intended to confirm the parties' current understanding of the terms, but it is not intended to create any legal obligations with respect to any of the terms. Neither party should rely on this quote and no legal or equitable remedy will arise from any such reliance. Instead, the parties must reach a final agreement. A final agreement will be a condition precedent to any binding obligations. A fully executed Contract Agreement will be required to be completed before an order is processed.

PRODUCT DESCRIPTIONS

Elite™ Rescue - SaaS *Includes Elite™ Field	In addition to receiving both Elite EMS and Elite Fire for compliant data collection, the Rescue package includes the Locations/Occupants/Inspections module.
Investigations	Investigations is a separate module that allows your investigators to document all aspects of a fire-related investigation, including such things as witnesses, evidence grids and weather related information. Note: Elite Fire or Rescue is required.
CAD Distribution	The ability to easily integrate CAD data into run reports is very beneficial in ensuring accurate data. CAD data can be obtained via a file export, a query or it can be sent directly to the ImageTrend web service. Only fields listed in the CAD integration workbook are available for population through the integration.

Township Supervisor
Brenda L. Stumbo
Township Clerk
Heather Jarrell Roe
Township Treasurer
Stan Eldridge

YPSILANTI TOWNSHIP
— OFFICE OF THE SUPERVISOR —

Trustees
Ryan Hunter
John Newman II
Gloria Peterson
Debbie Swanson

MEMORANDUM

To: Charter Township of Ypsilanti Board of Trustees

From: Brenda Stumbo, Township Supervisor

Date: August 9, 2023

RE: Request to approve Washtenaw County Road Commission (WCRC) 2023 Second Road Agreement in the amount of $17,113.74, budgeted in 213-446-982.006

Attached for the Board's consideration is the 2023 Ypsilanti Township Second Agreement with the Washtenaw County Road Commission for a third street sweeping service on curbed local roads, in addition to the two seasonal sweepings.

There are 174.63 curb miles in the Township, costing $98.00 per curb mile, equaling $17,113.74 per round. This cost is budgeted in line 213-446-982.006.

Thank you for your consideration.

2023 YPSILANTI TOWNSHIP SECOND AGREEMENT

THIS AGREEMENT, made and entered into this _____ day of _____, 2023, by and between the Township Board of Ypsilanti Township, Washtenaw County, parties of the first part and the Board of Washtenaw County Road Commissioners, parties of the second part.

WHEREAS, the parties of the first part desire that certain improvements be made upon the local roads in the Township of Ypsilanti, and

WHEREAS, proper authority is provided to the parties of the agreement under the provisions in Act 51 of Public Acts of 1951 as amended,

IT IS NOW THEREFORE AGREED, the parties of the second part will accomplish the improvements as specified herein, all in accordance with the standards of the parties of the second part.

IT IS FURTHER AGREED, the parties of the first part shall pay WCRC for the actual project costs incurred for the project; and

IT IS FURTHER AGREED, the WCRC will submit an invoice to the Township on September 1, 2023, for 50% of the estimated project costs. Following project completion and final accounting of the project costs, WCRC will submit the final invoice for the actual remaining unpaid costs. The final invoice shall provide supporting detail and information, which reasonably identifies the actual project costs incurred by WCRC. The Township described herein agrees to remit payment within 30 days from receipt of WCRC invoices.

1. **Additional Street Sweeping Services:**
Work to include one (1) additional street sweepings on curbed local roads in Ypsilanti Township. 2023 Local Road Sweeping in Ypsilanti Township (one round) = 174.63 curb miles @ $98.00 per curb mile = $17,113.74 per round.
Estimated cost: $ 17,113.74

AGREEMENT SUMMARY

2023 LOCAL ROAD PROGRAM	
Additional Street Sweeping Services	$ 17,113.74
Subtotal	$ 17,113.74
ESTIMATED AMOUNT TO BE PAID BY YPSILANTI TOWNSHIP UNDER THIS AGREEMENT DURING 2023:	**$ 17,113.74**

FOR YPSILANTI TOWNSHIP:

_____	_____
Brenda Stumbo, Supervisor	Heather Jarrell Roe, Clerk

FOR WASHTENAW COUNTY ROAD COMMISSION:

_____	_____
Barbara Ryan Fuller, Chair	Sheryl Soderholm Siddall, Managing Director

Township Supervisor
Brenda L. Stumbo
Township Clerk
Heather Jarrell Roe
Township Treasurer
Stan Eldridge

YPSILANTI TOWNSHIP
— RECREATION DEPARTMENT —

Trustees
Ryan Hunter
John Newman II
Gloria Peterson
Debbie Swanson

MEMORANDUM

To: Charter Township of Ypsilanti Board of Trustees

From: John Hines, Interim Residential Services Director

Date: August 9, 2023

RE: Request Authorization to approve Stantec Consulting to provide professional services related to the Design, Bid Process and Project Administration design for the Ypsilanti Township Community Center Water Damage Renovation

The Recreation Department is looking for authorization to approve Stantec Consulting to provide professional services related to the Phases 2-5 for 200 Hallway and Golf Office Renovation for the Not to Exceed amount of $47,500, which is budgeted line #213-901-976.008.

Stantec's Design Development (Phase 2) proposal consists of:
Incorporating Design Development tasks into the contract document phase.

Stantec's Contract Documents (Phase 3) proposal consists of:
Taking steps to get tasks in order to go out to bid.

Price for Phase 2&3: Lump Sum $15,000

Stantec's Bidding and Contract Award (Phase 4) proposal consists of:
Assisting the Township in bidding the project and selecting contractor.

Price for Phase 4: Not To Exceed $6,100

Stantec's Contract Administration, Project Closeout and Warranty (Phase 5) proposal consists of:
Work on the Township's behalf to assist in matters pertaining to the agreement with approved contractor and to see the project out until completion.

Price for Phase 5: Not To Exceed $26,400

This project is a continuation of the work that needs to be completed at the Community Center from the water damage sustained in December 2022. Stantec Consulting was approved at the June 20th BOT meeting to oversee the design of the Community Center renovation project.

John Hines

Stantec Consulting Michigan Inc.
1168 Oak Valley Drive, Suite 100, Ann Arbor MI 48108-9200

August 4, 2023
File: 2075154401

Attention: Mr. John Hines, CPRP
Ypsilanti Township Recreation Director
Charter Township of Ypsilanti
7200 South Huron River Drive
Ypsilanti, MI 48197

Dear Director Hines,

Reference: Architectural and Engineering Design Services for the Community Center Hallway 200 Insurance Package Renovations Project
Charter Township of Ypsilanti, Washtenaw County, Michigan

As requested, Stantec Consulting Michigan Inc. (Stantec) is pleased to submit this proposal for professional Architectural and Engineering (A/E) Design Services for the Community Center Hallway 200 Insurance Package Renovations Project. It is our understanding these improvements will consist of renovations to Hallway 200 and the adjacent rooms to address work related to an existing plumbing piping line which has caused past damage to the subfloor and floor. The anticipated scope to be included is as follows:

Room 202: The existing room has had the finished floor removed and the floor substrate is in various stages of repair. The room should receive patch and repair work of the existing floor substrate, new floor finish (Vinyl or similar assumed) and new rubber base in the areas of remediation. Existing walls do not appear to have any damage cause by the back-up event.

Room 204: The existing room has had the parts of the finished floor removed and the floor substrate is in various stages of repair. The room should receive patch and repair work of the existing floor substrate, installation of matching wood flooring to provide a consistent dance floor in-kind to match its intent prior to the back-up event and new rubber base in the areas of remediation. Any existing walls with damage cause by the back-up event are to be patched and repaired to receive new paint finish.

Hallway 200: The existing room has had the finished floor removed and the floor substrate is in various stages of repair. The room should receive patch and repair work of the existing floor substrate, new floor finish (Vinyl or similar assumed) and new rubber base in the areas of remediation. Any existing walls with damage cause by the back-up event are to be patched and repaired to receive new paint finish.

Room 201: The existing room has had the finished floor removed and the floor substrate is in various stages of repair. The room should receive patch and repair work of the existing floor substrate, new floor finish (Vinyl or similar assumed) and new rubber base in the areas of remediation. Any existing walls with damage cause by the back-up event are to be patched and repaired to receive new paint finish.

Golf Office: The existing room has had the finished floor removed and the floor substrate is in various stages of repair. The room should receive patch and repair work of the existing floor substrate, new floor finish (Vinyl or similar assumed) and new rubber base in the areas of remediation. Any existing walls with damage cause by the back-up event are to be patched and repaired to receive new paint finish.

Golf Office Breakroom: The existing room has had the finished floor removed and the floor substrate is in various stages of repair. The room should receive patch and repair work of the existing floor substrate, new floor finish (Vinyl or similar assumed) and new rubber base in the areas of remediation. Any existing walls with damage cause by the back-up event are to be patched and repaired to receive new paint finish. The ceiling is damaged and recommended to be replaced. Existing casework in the room was damaged and is proposed to be replaced in-kind.

SCOPE OF WORK REQUESTED

Stantec proposes to perform the following tasks as part of these services:

~~**1. Concept Report (Phase I)**~~

~~A. The A/E will meet with Township staff to confirm project scope and requirements.~~
~~B. Review applicable code and ADA requirements, field verify existing conditions and review available record drawings, reports, and studies.~~
~~C. Conduct non-destructive analysis of existing sanitary system design to determine potential recommendations. Destructive testing, digital camera investigations and other invasive investigative analysis is not provided or anticipated.~~
~~D. Provide conceptual report for review and approval.~~

~~This phase is estimated to be four weeks.~~

Completed in the Community Center Main Building Sanitary Backup Response Renovations Concept Report dated August 07, 2023.

2. Design Development (Phase II)

A. Stantec proposes incorporating Design Development tasks into the Contract Document phase.

3. Contract Documents (Phase III)

A. After final approval of the final design package from Phase I by the Township, as well as the appropriate municipal commissions and other governing bodies, the A/E will create detailed construction and specification documents for bidding purposes.
B. Provide finishes and samples identifying materials to be incorporated into the project and meet with Township staff to present drawings and finish selections for approval. This meeting is proposed to occur at the same time as the building restroom renovation finish presentation.

C. Determine phasing requirements to minimize disruption to existing spaces and allow building to be occupied throughout construction. Final phasing is to be coordinated with the selected contractor(s).
D. The final contract documents shall include as a minimum: Demolition Plans (if required), Life Safety/Code Plan, Floor Plan(s), Details, and sheet specifications.
E. Plan Approvals - The A/E is responsible for submitting for plan reviews to the Township including, but not limited to: Building, Mechanical, Electrical and Plumbing. Any Fire Protection and/or Fire Alarm design and submittals are to be submitted by the Licensed Contractor performing the work. The Township is waiving plan review fees for this project.

This phase is estimated as follows-final is to be discussed and determined as the project develops:

- August 15, 2023 – Authorization to Proceed
- Field verification as needed
- Week of August 21, 2023 – Finishes Meeting and Scope Review
- September 01, 2023 – Owner Review Set (This will also be Stantec's internal review set)
- September 08, 2023 – Set Delivered for Permit and Board submissions

4. Bidding and Contract Award (Phase IV)

A. The A/E will assist the Township in bidding the project to prospective prime contractors.
B. Services will include assisting the Township with the distribution of plans and specifications, assisting with sub-contractor pre-bid meetings, assisting with formulating responses to prospective bidders' questions, issuing addendums (if necessary), attendance at the bid opening, providing the Township with a recommendation for prime contract awards.

This phase is estimated to be four to six weeks.

5. Contract Administration, Project Closeout, and Warranty (Phase V)

A. The A/E shall be a representative of and shall advise and consult with the Township during construction until the final payment to prime contractors is due and during the correction period described in the Contract Documents.
B. Construction Related Services - The A/E will provide on the Townships behalf, contract administration services. Services anticipated to be provided consist of attending Observation Site Visits at the job site to evaluate job progress. The number of Observation Visits is assumed to be two (2). Attend OAC meetings as established by the Contractor and Owner to review the construction schedule and outstanding items. The number of OAC meetings is assumed not to exceed 12 virtual meetings. It is Stantec's understanding that the Prime contractor will be responsible for scheduling all construction related meetings, including the OAC as well as maintain construction schedule, meeting agendas, meeting minutes, and sub-contractor coordination. Review of submittals and shop drawings, processing change orders and Requests for Information, processing certificates for payment to prime contractors, verifying Substantial and Final Completion, developing punch list (one (1) assumed per discipline) and confirm completion of each item with coordination with the Contractor services are anticipated. Review of warranty and project

closeout documentation as provided by the Contractor anticipated. An As-Constructed set incorporating design changes during the construction phase as well as any Contractor provided markups is anticipated to be provided.

This phase is estimated to be 12 weeks.

UNDERSTANDINGS & ASSUMPTIONS

This proposal was developed under the following understandings and assumptions:

- Existing drawings to be provided.
- Hazardous material testing and any necessary abatement will be provided by owner.
- Excludes any permit fees, geotechnical services or any work not listed above.
- Conceptual Total Project costs are unknown.
- Assumes that existing mechanical, plumbing and electrical infrastructure is adequate to support the anticipated scope.
- Fire Protection scope is not anticipated.

SCHEDULE

We propose to complete the design, engineering, and permit application package per the weeks noted above after authorization. Authorization will be required prior to beginning each phase.

BUDGET

We recommend establishing for the work listed above:

Phase II/III: Lump Sum of $15,000.00.

Phase IV: Hourly Not to Exceed estimated at 6,100.00 - Approximately 34 hours.

Stantec is proposing that the Township utilized Stantec services as needed. This list provided above is a recommendation but is not a required or exhaustive list.

Phase V: Hourly Not to Exceed estimated at $26,400.00 – Approximately 144 hours.

Stantec is proposing that the Township utilized Stantec services as needed. This list provided above is a recommendation but is not a required or exhaustive list.

If the above proposal meets your approval, please sign this proposal letter and return a copy to our office. All work will be completed under the existing General Services Agreement between Ypsilanti Charter Township and Stantec. We sincerely appreciate the opportunity to continue to work with the Township and look forward to assisting you with these important improvements. If you should have any questions, please feel free to contact us.

Reference: **Community Center Hallway 200 Insurance Package Renovations Project**

Regards,

Stantec Consulting Michigan Inc.

Lindsay Woods AIA, NCARB, LEED® Green Associate
Project Manager
Phone: 248-376-7972
Lindsay.Woods@stantec.com

Mark D. Pascoe PE, LEED® AP, ENV SP
Principal
Phone: 734-214-1865
Mark.Pascoe@stantec.com

ACKNOWLEDGED AND ACCEPTED:

CHARTER TOWNSHIP OF YPSILANTI

Brenda Stumbo
Supervisor

_____, 2023

Heather Jarrell Roe
Clerk

_____, 2023

ws u:\2075154401\architecture\a_pm_framework\00_proposal\02_proposal\20230804 200hw insurance\pro_hines_ypsi_comm_ctr_hallsuite200_reno_20230804.docx

Township Supervisor
Brenda L. Stumbo
Township Clerk
Heather Jarrell Roe
Township Treasurer
Stan Eldridge

YPSILANTI TOWNSHIP
— RECREATION DEPARTMENT —

Trustees
Ryan Hunter
John Newman II
Gloria Peterson
Debbie Swanson

MEMORANDUM

To: Charter Township of Ypsilanti Board of Trustees

From: John Hines, Interim Residential Services Director

Date: August 9, 2023

RE: Request Authorization to approve Stantec Consulting to provide professional services related to the Design, Bid Process and Project Administration for the Ypsilanti Township Community Center Bathroom Renovation

The Recreation Department is looking for authorization to approve Stantec Consulting to provide professional services related to the Phases 2-5 for Community Center Bathroom Renovations for the Not to Exceed amount of $98,700, which is budgeted line #282-901-981.040.

Stantec's Design Development (Phase 2) proposal consists of:
Incorporating Design Development tasks into the contract document phase.

Stantec's Contract Documents (Phase 3) proposal consists of:
Taking steps to get tasks in order to go out to bid.

Price for Phase 2&3: Lump Sum $49,000

Stantec's Bidding and Contract Award (Phase 4) proposal consists of:
Assisting the Township in bidding the project and selecting contractor.

Price for Phase 4: Not To Exceed $9,400

Stantec's Contract Administration, Project Closeout and Warranty (Phase 5) proposal consists of:
Work on the Township's behalf to assist in matters pertaining to the agreement with approved contractor and to see the project out until completion.

Price for Phase 5: Not To Exceed $40,300

This project was submitted by recreation staff to the ARPA Committee due to the age of the bathroom fixtures, piping and amount of issues that piping has caused in recent years. Much of the piping in the building is original from the 1940's build. In recent years staff have had to schedule service on the restrooms upwards of 10+ times a year.

John Hines

Stantec Consulting Michigan Inc.
1168 Oak Valley Drive, Suite 100, Ann Arbor MI 48108-9200

August 4, 2023
File: 275154401

Attention: **Mr. John Hines, CPRP**
Ypsilanti Township Recreation Director
Charter Township of Ypsilanti
7200 South Huron River Drive
Ypsilanti, MI 48197

Dear Director Hines,

Reference: **Architectural and Engineering Design Services for the Ypsilanti Township Community Center Bathroom Renovations Project (ARPA Funding Scope)**
Charter Township of Ypsilanti, Washtenaw County, Michigan

As requested, Stantec Consulting Michigan Inc. (Stantec) is pleased to submit this proposal for professional Architectural and Engineering Design Services for the Ypsilanti Township Community Center Bathroom Renovations Project. It is our understanding these renovations will consist of renovations to six (6) restrooms and associated utility improvements described below:

Part A:

The existing community center underground sanitary piping consists of section of cast iron soil piping and vitrified clay piping. Based on the original building drawings received by Stantec, the current building layout, and the current excavation, it appears that a portion of the building was built over the original 6" exterior vitrified clay piping. It has been identified that some of the original vitrified clay piping was compromised through settlement and/or age deterioration. This sanitary piping routes from Room 202 under offices, through the lobby and racquetball courts and then exits the building to the west.

Based on the failure of the existing underground sanitary piping system, the existing vitrified clay piping is recommended to be replaced. Prior to replacement, a survey team utilizing cameras and ground penetrating radar is recommended to be engaged to limit exploratory flooring demolition and excavation to find and replace the failed piping under the building. The replacement of the sanitary piping will include removal of existing floor finishes, saw cutting of the existing concrete floor, and replacing existing floor finishes.

Room 202: Remove existing remaining rubber base. Paint room in entirety. Install new rubber base.

Room 204: Remove existing remaining rubber base. Paint room in entirety. Install new rubber base. Remove existing ballet bars and install new ballet bars.

Hallway 200: Remove existing remaining rubber base. Paint room in entirety. Install new rubber base.

Room 201: Remove existing remaining rubber base. Paint room in entirety. Install new rubber base.

Golf Office: Remove existing remaining rubber base. Paint room in entirety. Install new rubber base.

Golf Office Breakroom:
Remove remaining existing rubber base. Paint room in entirety. Install new rubber base.

Additional room floor finish removal and replacement due to the replacement of the existing piping.

Part B:

Based upon the noted observations Stantec is recommending that the existing domestic plumbing infrastructure be replaced. The scope will include replacement of the existing galvanized steel and copper piping distribution system throughout the facility. The scope of the replacement will be limited to the corridors and service entry mechanical room. The new cold water, hot water, hot water return piping will be routed throughout the corridors with shutoff valves provided for each existing branch. The restroom renovations will tie into the new connections. Other existing branch galvanized steel piping will be replaced at a future date when the rooms associated with those plumbing fixtures are renovated. Corridor ceilings and lighting will be replaced to facilitate the removal and replacement of the domestic plumbing. Existing low voltage equipment will be temporarily supported and re-installed in the new ceiling. New fire alarm devices and a new fire alarm panel will be provided.

Part C:

Based upon the noted observations Stantec is recommending renovations to the existing restrooms. The renovations would include accessibility updates; new interior wall and floor finishes, including painting, ceramic tile, and related modifications to existing walls and ceilings; new toilet and urinal partitions; new plumbing fixtures, including new vanities, faucets, toilets, urinals, and new toilet accessories.

It is assumed that Men's 123, Women's 121, Women's 113, Men's 114, Women's 151 and Men's 160 will implement the same finishes as approved by the Client in Phase III. The Men's and Women's golf restrooms will receive an elevated finish package.

All new electrical, mechanical and plumbing systems would be provided and consist of the following elements:

Plumbing systems: All plumbing piping within the restroom renovation will be replaced. Domestic cold water, hot water, and hot water return piping will be routed from the new domestic mains provided as part of the plumbing infrastructure project. All new plumbing fixtures will be provided within the restroom. All existing sanitary, waste, and vent piping will be replaced within the room. Underground piping will

be replaced with PVC piping and above ground piping will be replaced with cast iron piping. All floor saw cutting will be limited to the restroom and the existing sanitary main outside of the restroom will remain.

Mechanical systems: The existing abandoned heating systems, supply and exhaust ductwork, and electric heaters will be removed. The existing supply and exhaust distribution systems will be extended to new grille, registers, and diffusers coordinated with the new ceiling. The existing exhaust fan will be evaluated during design and replaced if required.

Electrical systems: The existing receptacles and lighting serving the restrooms will be removed and replaced.

New GFCI receptacles served from existing panel boards will be provided. It is anticipated that the existing panelboards and breakers are in good working order and that no code violations exist that will require replacement of the panelboards or individual breakers.

Any replaced mechanical equipment is anticipated to be re-served from the existing circuit.

New LED lighting utilizing vacancy sensors will be provided. Battery operated emergency lighting fixtures will be provided.

Low voltage scope will be limited to reinstalling existing devices.

SCOPE OF WORK REQUESTED

Stantec proposes to perform the following tasks as part of these services:

~~**1. Conceptual/Schematic Design (Phase I)**~~

~~A. The A/E will meet with Township staff to confirm project scope and requirements.~~
~~B. Review applicable code and ADA requirements, field verify existing conditions and review available record drawings, reports, and studies.~~
~~C. Conduct analysis of existing sanitary system design and capacities based on connected plumbing fixtures to determine whether the system is adequate. Identify modifications required to correct existing deficiencies in the system. Destructive testing, digital camera investigations and other invasive investigative analysis is not provided or anticipated.~~
~~D. Provide conceptual/schematic design drawings for review and approval.~~

~~This phase is estimated to be four weeks.~~

Reference: **Community Center Bathroom Renovations Project**

Completed in the Community Center Main Building Sanitary Backup Response Renovations and Main Building Restroom Renovations Concept Reports dated August 07, 2023.

2. Design Development (Phase II)

A. Stantec proposes incorporating Design Development tasks into the Contract Document phase.

3. Contract Documents (Phase III)

A. After final approval of the final design package from Phase I by the Township, as well as the appropriate municipal commissions and other governing bodies, the A/E will create detailed construction and specification documents for bidding purposes.
B. Provide finishes and samples identifying materials to be incorporated into the project and meet with Township staff to present drawings and finish selections for approval.
C. Determine phasing requirements to minimize disruption to existing spaces and allow building to be occupied throughout construction.
D. The final contract documents shall include as a minimum: Demolition Plans, Life Safety/Code Plan, Floor Plan(s), Reflected Ceiling Plans, Interior Elevations, Details, Plumbing Plan(s) and Isometrics, Door / Window / Room Finish / Mechanical / Plumbing / Electrical schedules and diagrams, HVAC Plans, Power Plans, Lighting Plans, Lighting Controls Requirements, and sheet specifications.
E. Plan Approvals - The A/E is responsible for submitting for plan reviews to the Township including, but not limited to: Building, Mechanical, Electrical and Plumbing. Any Fire Protection and/or Fire Alarm design and submittals are to be submitted by the Licensed Contractor performing the work. The Township is waiving plan review fees for this project.

This phase is estimated as follows-final is to be discussed and determined as the project develops:

i. August 15, 2023 – Authorization to Proceed
ii. Field verification as needed
iii. Week of August 21, 2023 – Finishes Meeting and Scope Review
iv. September 01, 2023 – Owner Review Set (This will also be Stantec's internal review set)
v. September 08, 2023 – Set Delivered for Permit and Board submissions

4. Bidding and Contract Award (Phase IV)

A. The A/E will assist the Township in bidding the project to prospective prime contractors.
B. Services will include assisting the Township with the distribution of plans and specifications, assisting with sub-contractor pre-bid meetings, assisting with formulating responses to prospective bidders' questions, issuing addendums (if necessary), attendance at the bid opening, providing the Township with a recommendation for prime contract awards.

This phase is estimated to be four to six weeks.

5. Contract Administration, Project Closeout, and Warranty (Phase V)

A. The A/E shall be a representative of and shall advise and consult with the Township during construction until the final payment to prime contractors is due and during the correction period described in the Contract Documents.

B. Construction Related Services - The A/E will provide on the Townships behalf, contract administration services. Services anticipated to be provided consist of attending Observation Site Visits at the job site to evaluate job progress. The number of Observation Visits is assumed to be two (2). Attend OAC meetings as established by the Contractor and Owner to review the construction schedule and outstanding items. The number of OAC meetings is assumed not to exceed 12 virtual meetings. It is Stantec's understanding that the Prime contractor will be responsible for scheduling all construction related meetings, including the OAC as well as maintain construction schedule, meeting agendas, meeting minutes, and sub-contractor coordination. Review of submittals and shop drawings, processing change orders and Requests for Information, processing certificates for payment to prime contractors, verifying Substantial and Final Completion, developing punch list (one (1) assumed per discipline) and confirm completion of each item with coordination with the Contractor services are anticipated. Review of warranty and project closeout documentation as provided by the Contractor anticipated. An As-Constructed set incorporating design changes during the construction phase as well as any Contractor provided markups is anticipated to be provided.

   This phase is estimated to be 12 weeks.

UNDERSTANDINGS & ASSUMPTIONS

This proposal was developed under the following understandings and assumptions:

- Existing drawings to be provided.
- Hazardous material testing and any necessary abatement will be provided by owner.
- Survey to determine location of underground sanitary pipe will be provided by owner.
- Excludes any permit fees, geotechnical services or any work not listed above.
- Conceptual Total Project costs were originally estimated at $737,000 in 2022. Based on the explorations in the Concept Report Phase, Stantec estimates that this budget will exceed the noted Conceptual Total Project costs.
- Assumes that existing mechanical, plumbing and electrical infrastructure is adequate to support the anticipated scope – except as noted for improvements.
- Fire Protection scope is not anticipated.

SCHEDULE

We propose to complete the design, engineering, and permit application package per the weeks noted above after authorization. Authorization will be required prior to beginning each phase.

BUDGET

We recommend establishing for the work listed above:

Phase II/III: Lump Sum of $49,000.00.

Phase IV: Hourly Not to Exceed estimated at 9,400.00 - Approximately 52 hours.

Reference: **Community Center Bathroom Renovations Project**

Stantec is proposing that the Township utilized Stantec services as needed. This list provided above is a recommendation but is not a required or exhaustive list.

Phase V: Hourly Not to Exceed estimated at $40,300 – Approximately 220 hours.

Stantec is proposing that the Township utilized Stantec services as needed. This list provided above is a recommendation but is not a required or exhaustive list.

If the above proposal meets your approval, please sign this proposal letter and return a copy to our office. We sincerely appreciate the opportunity to continue to work with the Charter Township of Ypsilanti and look forward to assisting you with these important improvements. If you should have any questions, please feel free to contact us.

Regards,

Stantec Consulting Michigan Inc.

Lindsay Woods AIA, NCARB, LEED® Green Associate
Project Manager
Phone: 248-376-7972
Lindsay.Woods@stantec.com

Mark D. Pascoe PE, LEED® AP, ENV SP
Principal
Phone: 734-214-1865
Mark.Pascoe@stantec.com

ACKNOWLEDGED AND ACCEPTED:

CHARTER TOWNSHIP OF YPSILANTI

_____
John Hines, CPRP
Recreation Director

_____, 2023

Township Supervisor
Brenda L. Stumbo
Township Clerk
Heather Jarrell Roe
Township Treasurer
Stan Eldridge

YPSILANTI TOWNSHIP
— RECREATION DEPARTMENT —

Trustees
Ryan Hunter
John Newman II
Gloria Peterson
Debbie Swanson

MEMORANDUM

To: Charter Township of Ypsilanti Board of Trustees

From: John Hines, Interim Residential Services Director

Date: August 9, 2023

RE: Request Authorization to approve Stantec Consulting to provide professional services related to Design, Bid Process and Project Administration for the Ypsilanti Township Green Oaks Golf Course Bathroom

The Recreation Department is looking for authorization to approve Stantec Consulting to provide professional services related to the Phases 2-5 for Green Oaks Golf Course Bathroom Renovations for the Not to Exceed amount of $58,300, which is budgeted line #282-901-981.100

Stantec's Design Development (Phase 2) proposal consists of:
Incorporating Design Development tasks into the contract document phase.

Stantec's Contract Documents (Phase 3) proposal consists of:
Taking steps to get tasks in order to go out to bid.

Price for Phase 2&3: Lump Sum $22,200

Stantec's Bidding and Contract Award (Phase 4) proposal consists of:
Assisting the Township in bidding the project and selecting contractor.

Price for Phase 4: Not To Exceed $7,400

Stantec's Contract Administration, Project Closeout and Warranty (Phase 5) proposal consists of:
Work on the Township's behalf to assist in matters pertaining to the agreement with approved contractor and to see the project out until completion.

Price for Phase 5: Not To Exceed $28,900

This project was submitted by recreation and golf staff due to the age of the bathroom fixtures, piping and amount of issues that piping has caused in recent years. In addition to roofing concerns, staff have had to schedule service and close the restrooms multiple times.

John Hines

Stantec Consulting Michigan Inc.
1168 Oak Valley Drive, Suite 100, Ann Arbor MI 48108-9200

August 4, 2023
File: 2075154401

Attention: Mr. John Hines, CPRP
Ypsilanti Township Recreation Director
Charter Township of Ypsilanti
7200 South Huron River Drive
Ypsilanti, MI 48197

Dear Director Hines,

Reference: Architectural and Engineering Design Services for the Community Center Golf Course and Shop Bathroom Renovations Project
Charter Township of Ypsilanti, Washtenaw County, Michigan

As requested, Stantec Consulting Michigan Inc. (Stantec) is pleased to submit this proposal for professional Architectural and Engineering (A/E) Design Services for the Community Center Golf Course Bathroom Renovations Project. It is our understanding these improvements will consist of renovations to two (2) restroom buildings with a total of four (4) restrooms to update the functionality of the restrooms by installing new fixtures, wall, and floor finishes, and ensuring the spaces comply with current ADA standards. Parts of the domestic plumbing distribution piping are nearing the end of their useful life and renovations will provide an opportunity to replace piping along with this project, including:

Part A:

Renovations to both buildings. The replacement would consist of new roof substrate and shingles, new skylight, new larger soffit vent replacement, four total accessible water closets associated new plumbing fixtures. Replacement of the glass block in all four locations with an alternate impact resistant translucent application. All existing to remain elements would be painted. New exterior doors and hardware to be provided. All new plumbing systems would be provided and consist of the following elements:

- Plumbing Systems: Existing plumbing distribution systems will be modified to support the
- replacement of the existing plumbing fixtures.
- Mechanical Systems: The new building will maintain naturally ventilated.
- Select modification and replacement of the existing sidewalk to eliminate trip hazards to be incorporated.

Part B:

Renovations to both restrooms. The renovations would consist of re-sizing the showers to 3x3 installations so that the plumbing fixtures can be re-set to meet current clearance dimensions. Accessories would be provided to meet current standards. Two total accessible water closets

associated new plumbing fixtures would be provided with second water closet for each restroom. Wall demolition and reconfiguration is required. Patch and repair of the floor with new floor finish is recommended due to wall reconfiguration. Ceiling and lighting replacement is recommended due to wall reconfiguration. All existing to remain elements previously painted would be painted. New metal partitions to be provided. System infrastructure renovations will be provided to support the renovations and consist of the following elements:

- Plumbing Systems: All new plumbing fixtures will be provided. New domestic piping and sanitary waste and vent piping will be provided to support the renovations.
- Mechanical Systems: The mechanical distribution systems are recommended to be evaluated during design and augmented to support building operation and meet current codes.
- Electrical Systems: The existing lighting and power distribution systems in the area of renovation will be replaced and augmented to support building operation and the renovation. It is assumed that the existing power source is adequate and that no code violations exist within the panel that would require panel replacement.

SCOPE OF WORK REQUESTED

Stantec proposes to perform the following tasks as part of these services:

~~**1. Concept Report (Phase I)**~~

~~A. The A/E will meet with Township staff to confirm project scope and requirements.~~
~~B. Review applicable code and ADA requirements, field verify existing conditions and review available record drawings, reports, and studies.~~
~~C. Conduct non-destructive analysis of existing sanitary system design and capacities based on connected plumbing fixtures to determine potential recommendations. Destructive testing, digital camera investigations and other invasive investigative analysis is not provided or anticipated.~~
~~D. Provide concept report for review and approval.~~

~~This phase is estimated to be four weeks.~~

Completed in the Community Center Golf Course Restroom Renovations and Shop Building Restroom Renovations Concept Reports dated August 07, 2023.

2. Design Development (Phase II)

A. Stantec proposes incorporating Design Development tasks into the Contract Document phase.

3. Contract Documents (Phase III)

A. After final approval of the final design package from Phase I by the Township, as well as the appropriate municipal commissions and other governing bodies, the A/E will create detailed construction and specification documents for bidding purposes.
B. Provide finishes and samples identifying materials to be incorporated into the project and meet with Township staff to present drawings and finish selections for approval.

C. Determine phasing requirements to minimize disruption to existing spaces and allow building to be occupied throughout construction.
D. The final contract documents shall include as a minimum: Demolition Plans, Life Safety/Code Plan, Floor Plan(s), Reflected Ceiling Plans, Interior Elevations, Details, Plumbing Plan(s) and Isometrics, Door / Window / Room Finish, Mechanical and Plumbing schedules and diagrams, and sheet specifications.
E. Plan Approvals - The A/E is responsible for submitting for plan reviews to the Township including, but not limited to: Building and Plumbing. The Township is waiving plan review fees for this project.

This phase is estimated as follows-final is to be discussed and determined as the project develops:

i. August 15th, 2023 - Authorization to Proceed
ii. Field verification as needed
iii. Week of September 18, 2023 – Finishes Meeting and Scope Review
iv. September 29, 2023 – Owner Review Set (This will also be Stantec's internal review set)
v. September 10, 2023 – Set Delivered for Permit and Board submissions

4. Bidding and Contract Award (Phase IV)

A. The A/E will assist the Township in bidding the project to prospective prime contractors.
B. Services will include assisting the Township with the distribution of plans and specifications, assisting with sub-contractor pre-bid meetings, assisting with formulating responses to prospective bidders' questions, issuing addendums (if necessary), attendance at the bid opening, providing the Township with a recommendation for prime contract awards.

This phase is estimated to be four to six weeks.

5. Contract Administration, Project Closeout, and Warranty (Phase V)

A. The A/E shall be a representative of and shall advise and consult with the Township during construction until the final payment to prime contractors is due and during the correction period described in the Contract Documents.
B. Construction Related Services - The A/E will provide on the Townships behalf, contract administration services. Services anticipated to be provided consist of attending Observation Site Visits at the job site to evaluate job progress. The number of Observation Visits is assumed to be two (2). Attend OAC meetings as established by the Contractor and Owner to review the construction schedule and outstanding items. The number of OAC meetings is assumed not to exceed 12 virtual meetings. It is Stantec's understanding that the Prime contractor will be responsible for scheduling all construction related meetings, including the OAC as well as maintain construction schedule, meeting agendas, meeting minutes, and sub-contractor coordination. Review of submittals and shop drawings, processing change orders and Requests for Information, processing certificates for payment to prime contractors, verifying Substantial and Final Completion, developing punch list (one (1) assumed per discipline) and confirm completion of each item with coordination with the Contractor services are anticipated. Review of warranty and project closeout documentation as provided by the Contractor anticipated. An As-Constructed set

incorporating design changes during the construction phase as well as any Contractor provided markups is anticipated to be provided.

This phase is estimated to be 12 weeks.

UNDERSTANDINGS & ASSUMPTIONS

This proposal was developed under the following understandings and assumptions:

- Existing drawings to be provided.
- Hazardous material testing and any necessary abatement will be provided by owner.
- Excludes any permit fees, geotechnical services or any work not listed above.
- Conceptual Total Project costs are unknown.
- Assumes that existing mechanical, pluming and electrical infrastructure is adequate to support the anticipated scope.
- Fire Protection scope in not anticipated.
- Electrical scope is not anticipated in the Golf Course Restrooms.

SCHEDULE

We propose to complete the design, engineering, and permit application package per the weeks noted above after authorization. Authorization will be required prior to beginning each phase.

BUDGET

We recommend establishing for the work listed above:

Phase II/III: Lump Sum of $22,200.00.

Phase IV: Hourly Not to Exceed estimated at 7,400.00 - Approximately 42 hours.

Stantec is proposing that the Township utilized Stantec services as needed. This list provided above is a recommendation but is not a required or exhaustive list.

Phase V: Hourly Not to Exceed estimated at $28,900.00 – Approximately 158 hours.

Stantec is proposing that the Township utilized Stantec services as needed. This list provided above is a recommendation but is not a required or exhaustive list.

If the above proposal meets your approval, please sign this proposal letter and return a copy to our office. All work will be completed under the existing General Services Agreement between Ypsilanti Charter Township and Stantec. We sincerely appreciate the opportunity to continue to work with the Township and look forward to assisting you with these important improvements. If you should have any questions, please feel free to contact us.

Reference: **Community Center Golf Course and Shop Bathroom Renovations Project**

Regards,

Stantec Consulting Michigan Inc.

Lindsay Woods AIA, NCARB, LEED® Green Associate
Project Manager
Phone: 248-376-7972
Lindsay.Woods@stantec.com

Mark D. Pascoe PE, LEED® AP, ENV SP
Principal
Phone: 734-214-1865
Mark.Pascoe@stantec.com

ACKNOWLEDGED AND ACCEPTED:

CHARTER TOWNSHIP OF YPSILANTI

Brenda Stumbo
Supervisor

_____, 2023

Heather Jarrell Roe
Clerk

_____, 2023

ws u:\2075154401\architecture\a_pm_framework\00_proposal\02_proposal\20230804 course restrooms 02\pro_hines_ypsi_comm_ctr_golf-shoprr_reno_20230804.docx

PUBLIC ACT 188 OF 1954 PROCEEDINGS
CHARTER TOWNSHIP OF YPSILANTI
WASHTENAW COUNTY, MICHIGAN
NOTICE OF PUBLIC HEARING
ON SPECIAL ASSESSMENT ROLL

PLEASE TAKE NOTICE that the Supervisor and Assessing Officer of the Township has reported to the Township Board and filed in the Office of the Township Clerk for public examination a special assessment roll prepared by the Assessor covering all properties within the Special Assessment Districts benefited by the districts listed below.

PLEASE TAKE FURTHER NOTICE that the Assessing Officer has further reported that the assessment against each parcel of land within said district is such relative portion of the whole sum levied against all parcels of land in said district as the benefit to such parcels bears to the total benefit to all parcels of land in said district.

PLEASE TAKE FURTHER NOTICE that the Township Board will hold a public hearing at the *Ypsilanti Township Civic Center, 7200 S. Huron River Drive, Ypsilanti, MI* on **September** 19**, 2023**, for the purpose of reviewing said special assessment roll and hearing any objections thereto. Said roll may be examined at the office of the Township Clerk during regular business hours of regular business days until the time of said hearing and may further be examined at said hearing. Appearance and protest at the hearing held to confirm the special assessment roll is required in order to appeal the amount of the special assessment to the Michigan Tax Tribunal.

An owner, or partner in interest, or his or her agent may appear in person at the hearing to protest the special assessment, or shall be permitted to file his or her appearance or protest by letter and his or her personal appearance should not be required. (The owner or any person having an interest in the real property who protests in person or in writing at the hearing may file a written appeal of the special assessment with the Michigan Tax Tribunal within 30 days after the confirmation of the special assessment roll.

THE FOLLOWING ARE THE PROPOSED SPECIAL ASSESSMENT ROLLS TO BE LEVIED ON THE 2023 WINTER TAX ROLL

SECURITY CAMERA SPECIAL ASSESSMENTS

DISTRICT	CODE
Sugarbrook	060
Thurston Area	062
Bud- Blossom Area	064
Huron Heights/ Huron Ridge	068
Manors at Creekside Village	070
Ponds at Lkwd- Maj Pond	072
Cliffs Condos	074
Village Grove Apartments	076

DISTRICT	CODE
West Willow	061
Apple Ridge Area	063
Holmes Rd Area	066
Creekside Village South	069
Lakewood- Majestic Lks	071
Redwood/ Nautica Pt Apts.	073
Crystal Ponds	075

STREET LIGHT SPECIAL ASSESSMENTS

DISTRICT	CODE
Shady Knoll 1-6	101
West Willow #1	104
Hickory Hill	107
Nancy Park #7	111
Onandaga Street	114
Washtenaw Concourse	117
Ivanhoe Area	120
Hunt/Hollis	123
Debby Court	126
Johnson Place	130
Washtenaw Clubview	133
Huron Commercial	136
Hayes Street	139
Streamwood 1-7	142
Bagley Street	148
Streamwood #8	151
Golf Estates	154
Russell St	157
Whispering Meadows #1	160
Partridge Creek 2&3	164
Preserves	167
Wash Clubview	170
Greene Farms #3	173
Tyler Rd	176
Tremont Park #1	179
Greene Farm 5	182
Greenfields 2 & 3	185
Huron Meadows	188
Gates Ave	193
Bradley Ave	197
Creekside East	201
Firwood Area	204
Lakeview #2	207
Creekside Village West #2	211
Lakewood- Majestic Lakes	214
Ponds at Lkwd/ Maj Pds-2	217
Village Grove Apartments	221

DISTRICT	CODE
Nancy Park 1-3	102
Ypsi Twp Area	105
Washtenaw Orchard	108
Rambling Road	112
West Willow Dist 3	115
Delaware Street	118
Oswego/Cayuga	121
Turtle Creek	124
Lynne Street	127
Huron Hearthside	131
Oakland Estates #3	134
Crestwood Sub	137
Ford Lake Village	140
Deauville Parrish	146
Partridge Creek #1	149
Smokler Textile	152
Ohio St 2000	155
Dakota	158
Amberly Grove	162
Partridge Creek North	165
S Ivanhoe St	168
Taft Ave	171
Greene Farms #4	174
Washtenaw Bus Park	177
Tremont Park #2	180
Greene Farm 6	183
Greene Farms #7	186
Rivergrove	189
Fairway Hills	194
Creekside West	198
Lakeview Area	202
Bradley St	205
Tremont Park Sub	208
Manors of Creekside Village	212
Ponds at Lkwd-Maj Ponds	215
Majestic Lks & Estates	218

DISTRICT	CODE
Nancy Park 5-6	103
West Willow #2	106
Washtenaw Ridge	109
Hickory Hill #1	113
S. Devonshire	116
Washtenaw CC #4	119
Hawthorne Street	122
Turtle Creek 2	125
West Willow 10&11	129
Oakland Estates	132
Brookside Street	135
Kansas St	138
Ford Lake Village #2	141
Spruce Falls	147
Georgetown Condos	150
Greene Farms #1 & #2	153
N. Kansas	156
Paint Creek Farms	159
Greenfields #1	163
Campbell St	166
Clubview Sub	169
Devonshire & Oregon	172
Raymond Meadows	175
Whittaker Village	178
Kirk St	181
Woodlawn St	184
Whispering Meadows	187
Aspen Ridge	191
Washtenaw Clubview	196
Creekside South	199
Majestic Lake	203
136- 177 Conversion	206
Turtle Creek #2	209
Creekside Village South #2	213
Redwood/ Nautica Pt Apts	216
Crystal Ponds	219

HEATHER JARRELL ROE, CLERK
Charter Township of Ypsilanti

The Ypsilanti Township Board will provide necessary reasonable auxiliary aids and services to individuals with disabilities requiring auxiliary aids or services. Individuals should contact the Ypsilanti Township Board by writing or calling the following: HEATHER JARRELL ROE, CLERK, 7200 S. Huron River Drive, Ypsilanti, MI 48197, PHONE: (734) 484-5156 or E-MAIL: hjarrellroe@ytown.org

CHARTER TOWNSHIP OF YPSILANTI
2023 BUDGET AMENDMENT # 11

August 15, 2023

AMOUNTS ROUNDED UP TO THE NEAREST DOLLAR

101 - GENERAL OPERATIONS FUND

Total Increase $15,071.00

Request to increase the budget for the approved wage adjustment for MCAO and MAAO classifications for tax assessors within TPOAM union. This was approved by the Board on May 16, 2023. This will be funded by an appropriation of prior year fund balance.

Revenues:	**Prior Year Fund Balance**	**101-000-699.999**	**$15,071.00**
		Net Revenues	**$15,071.00**
Expenditures:	**Salaries Pay Out**	**101-257-706.000**	**$14,000.00**
	FICA	**101-257-715.000**	**$1,071.00**
		Net Expenditures	**$15,071.00**

226 - ENVIRONMENTAL SERVICES FUND

Total Increase $150,000.00

Request to increase the budget for contractual chipping service due to any upcoming sever storms. Services needed for residential curbside tree chipping. This will be funded by an appropriation of prior year fund balance.

Revenues:	**Prior Year Fund Balance**	**226-000-699.999**	**$150,000.00**
		Net Revenues	**$150,000.00**
Expenditures:	**Contractual Services**	**226-528-818.000**	**$150,000.00**
		Net Expenditures	**$150,000.00**

Motion to Amend the 2023 Budget (#11)

Move to increase the General Fund budget by $15,071 to $14,623,588 and approve the department line item changes as outlined.

Move to increase the Environmental Fund budget by $150,000 to $3,974,633 and approve the department line item changes as outlined.

AUTHORIZATIONS AND BIDS

Township Supervisor
Brenda L. Stumbo
Township Clerk
Heather Jarrell Roe
Township Treasurer
Stan Eldridge

YPSILANTI TOWNSHIP
— WHERE YOUR FUTURE GROWS —

Trustees
John Newman II
Gloria Peterson
Debbie Swanson
Ryan Hunter

To: Charter Township of Ypsilanti Board of Trustees

CC: Brenda Stumbo, Supervisor

From: Steve Agdorny, Special Projects

Date: August 8, 2023

RE: Request to award the bid for flooring installation at 1405 Holmes Road Flooring to Ann Arbor Carpets Inc in the amount of $12,408.06, budgeted in line 266-303-975.135

Request to consider three additional quotes for the Holmes Road flooring received prior to MITN submission.

Quotes received via email:

1. Ann Arbor Carpets, Inc. Amount $12.408.06
2. G&K Floor Covering Amount $14.733.00
3. Shamrock Floorcovering Services Inc. Amount$14,750.24

Quotes received through MITN:

1. Quality Affordable Construction Amount $21,120.00
2. Robb's Flooring LLC. Amount $7,500.00

Based on the details of the quotes considering product, installation, scope of work and warranty, recommendation to board is to contract ***Ann Arbor Carpets Inc,*** in the amount of $12,408.06, budgeted in line item 266-303-975.135.

Steve Agdorny
Special Projects
sagdorny@ypsitownship.org
734-460-3099

Reference Material:

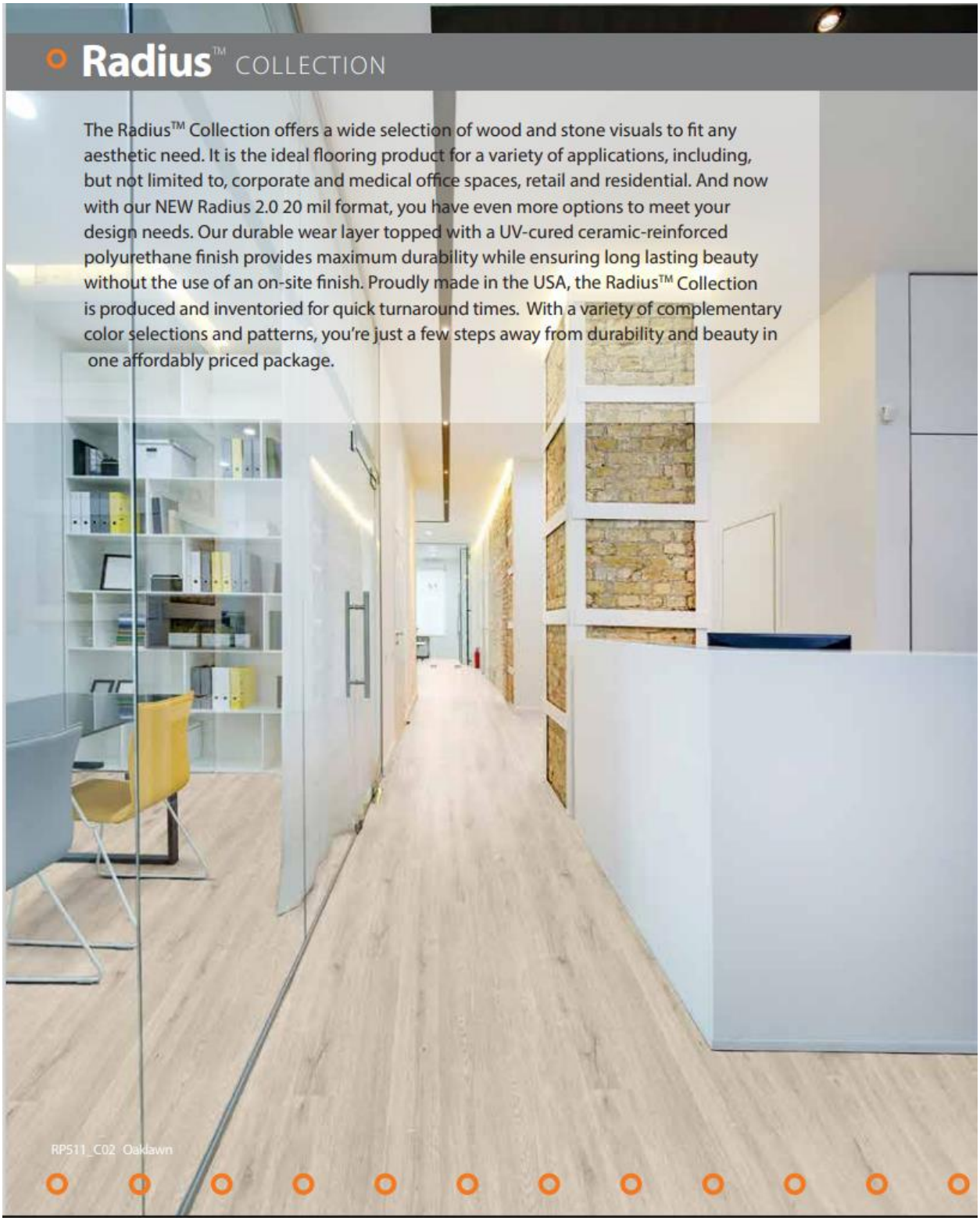
Radius™ COLLECTION
The Radius™ Collection offers a wide selection of wood and stone visuals to fit any aesthetic need. It is the ideal flooring product for a variety of applications, including, but not limited to, corporate and medical office spaces, retail and residential. And now with our NEW Radius 2.0 20 mil format, you have even more options to meet your design needs. Our durable wear layer topped with a UV-cured ceramic-reinforced polyurethane finish provides maximum durability while ensuring long lasting beauty without the use of an on-site finish. Proudly made in the USA, the Radius™ Collection is produced and inventoried for quick turnaround times. With a variety of complementary color selections and patterns, you're just a few steps away from durability and beauty in one affordably priced package.
RP511_C02 Oakdawn

The Six Degrees of

Radius™ VINYL FLOORING

- A designer-inspired palette of colors and patterns, all at a single price point
- Enhanced performance and durability made possible by the addition of our Ceramic Reinforced Urethane (CRU)
- A lower-maintenance flooring option which does not require a finish
- An eco-friendly product made from locally sourced raw materials
- Simple glue down installation allows for greater pattern/ design flexibility
- Readily available…made and inventoried in the USA!

With a variety of style options and the eco-friendly nature of Radius™, you're just a few steps away from ***a floor that delivers the utmost in design and performance.***

FEATURES

- Easy to Maintain
- Qualifies for LEED® Credits
- GREENGUARD Gold® Certification
- UV-Cured Ceramic-Reinforced Finish
- Extremely Durable
- Excellent Indentation Resistance
- Excellent Chemical Resistance
- Excellent Slip Resistance
- 100% Recyclable

WARRANTY

10-Year Commercial Warranty
20-Year Residential Warranty

RP312_C37 Palmer Plank

ENVIRONMENTAL PRODUCT DECLARATION® is available at **sixdegreesflooring.com**

For additional room scene images of all Six Degrees products, please visit **sixdegreesflooring.com,** click on the product page to view colors & room scene options.

For the most current and complete technical, installation and maintenance information, please visit **sixdegreesflooring.com**

Sustainability

At Six Degrees, we are dedicated to the environment and work tirelessly to provide LVT products that are not only beautiful, but durable and eco-friendly, as well. We are proud to be a strong environmental steward and continue to work to improve upon our sourcing and production practices, offering additional satisfaction that you have selected a floor with the environment in mind.

Our Story...

It began almost 15 years ago when senior managers from the Roppe Holding Company were introduced to Nox Corporation LVT/P from South Korea. Their high quality and aesthetics impressed the RHC team, who was looking to provide their customers with a durable LVT/P flooring option. For several years, a working relationship grew between the two companies as RHC purchased flooring products made in their Korean facilities. In 2014, an opportunity to manufacture these products in the U.S. became reality…an empty factory was found, equipment was installed, staff was hired, and Nox Corporation had a partner in RHC and a new U.S. operation in Fostoria, Ohio.

Fast forward two years to April of 2016, and the Six Degrees brand was born… launched to the North American market with Made in the USA LVT/P products. In 2017, Sustainable Purchasing Leadership Council (SPLC) recognized the RHC/ Six Degrees effort with a Case Study Award on this collaborative work to onshore an international supplier.

Our Products...

We know it looks odd to say "no recycled content" in the LVT/P business, but that is how our products are made; with only the highest quality virgin materials, including limestone, PVC resin, non-phthalate plasticizers, films, and superior wear finishes. We know from Healthy Building Network* studies that a wide variety of ingredients have been used in vinyl flooring in the past… but that's not how we operate. Our materials are sourced in the USA, most of them regionally, and are free of asbestos, heavy metals and other chemicals of concern that can be introduced to new vinyl products through "recycled materials."

**To learn more about recycling concerns in flooring, see Healthy Building Network studies (California 2005)*

Six Degrees LVT meets the toughest emissions test we have in the USA, the GREENGUARD Gold Certification standard by Underwriters Laboratory. In this test, our products spend two weeks in a small chamber with airflow simulating that of an office or education environment. Exiting air is filtered and the material filtered is analyzed for volatile organic compounds, commonly know as VOCs. VOC levels need to be 1/3 to 1/10th of the threshold limit values to pass the GREENGUARD Gold Certification standard.

An Environmental Product Declaration (EPD) is available for our glue down LVT/P flooring products. An EPD ensures transparency in the composition of our products, how they are manufactured, and how they go to market. You, as the customer, can rest well knowing you are selecting a flooring product free of contaminants and harmful chemicals…one that is manufactured in the USA using regionally sourced raw materials, and once produced, a product that ships from our warehouse to your door.

The Six Degrees of Sustainability…

- Our floors are 100% recyclable after use, which means even when your life with the floor is complete, a new product can be created…and that means less waste in landfills.
- Proudly manufactured in the USA. Less transport and fuel costs are needed to get your new flooring to you, our valued customer.
- Our products do not require an additional finish, which means less chemicals, less water and less energy are needed to maintain them and keep them looking beautiful.
- Six Degrees uses only 100% virgin vinyl materials. There is no recycled content and therefore no need to worry about contaminants in your flooring.
- Only non-phthalate plasticizers are used in the production of our floors. Six Degrees was the first in the industry to make this important change.

ENVIRONMENTAL PRODUCT DECLARATION® is available at **sixdegreesflooring.com**

For additional room scene images of all Six Degrees products, please visit **sixdegreesflooring.com,** click on the product page to view colors & room scene options.

ANN ARBOR CARPETS, INC.
PO BOX 346
SALINE, MI 48176
Telephone: 734-769-1710 Fax: 734-769-4849

ES302470

QUOTE

Sold To	Ship To
YPSILANTI TOWNSHIP 1405 HOLMES RD. YPSILANTI, MI 48198	YPSILANTI TOWNSHIP 1405 HOLMES RD. YPSILANTI, MI 48198

Quote Date	Tele #1	PO Number	Quote Number
05/23/23	734-544-4000		ES302470

Inventory	Style/Item	Color/Description	Quantity	Units	Price	Extension
RADIUS 2.0 - 7" X 47"	RADIUS 2.0 - 7" X 47"	TO BE DETERMINED	1,637.48	SF	3.49	5,714.81
	1. Conference Room, 3 Offices, 2 Storage Rooms, Men's Locker and Women's Locker. 2. Please order 47 cartons @ 34.84 sf/ctn. 3. Must confirm style/color.					
5092	PARABOND VINYL ADHESIVE	VINYL ADHESIVE	2.00	EA	209.99	419.98
6200-4-ADH	SHAW ADHESIVE SEALER	4 GAL	1.50	EA	129.99	194.99
40C81P100	4" BLACK VINYL COVE	ROPPE VINYL COVE	388.00	LF	1.19	461.72
	1. Must confirm color.					
SS4-30	CHAPCO COVE BASE ADHESIVE	COVE BASE ADHESIVE	8.00	EA	10.69	85.52
154-110	STANDARD SNAP DOWN	1" BROWN	32.00	LF	1.09	34.88
	1. Must confirm color.					
A3752	TRACK METAL-PINLESS	SINGLE FLANGE	24.00	LF	1.29	30.96
A3752F	TRACK METAL-PINLESS	PINLESS FLEX	8.00	LF	1.49	11.92
CMP-10	PREPSTAR FEATHER PATCH	10LB BAG	1.00	EA	29.99	29.99
L/LVT	LVT-GLUE DOWN		1,620.00	SF	1.75	2,835.00
L/C/R&H/GLUE	RIP/HAUL GLUE DIRECT		1,620.00	SF	0.35	567.00
DISPOSAL	DISPOSAL OF MATERIALS		1,620.00	SF	0.15	243.00
L/LABOR	LABOR		1,620.00	EA	0.25	405.00
	1. Labor to apply sealer to the subfloor in order to encapsulate the existing broadloom adhesive.					
L/BASE/RUBBE	BASE/RUBBER 2",4",6"		388.00	LF	1.15	446.20
L/RIP/BASE	RIP/BASE/RUBBER		388.00	LF	0.50	194.00
L/TRIMS/HS	TRIMS/HARD SURFACE		32.00	LF	2.00	64.00
L/PREP	PREP WORK		1.00	EA	75.00	75.00

05/23/23 — 11:16AM

Sales Representative(s):

STEVE PIESKE (2)

Material:	6,984.77
Service:	5,004.20
Misc. Charges:	0.00
Sales Tax:	419.09
Misc. Tax:	0.00
QUOTE TOTAL:	**$12,408.06**

Please send all checks and mail to:

PO BOX 346
Saline, MI 48176

ANN ARBOR CARPETS, INC.
PO BOX 346
SALINE, MI 48176
Telephone: 734-769-1710 Fax: 734-769-4849

ES302470

QUOTE

Sold To	Ship To
YPSILANTI TOWNSHIP 1405 HOLMES RD. YPSILANTI, MI 48198	YPSILANTI TOWNSHIP 1405 HOLMES RD. YPSILANTI, MI 48198

Quote Date	Tele #1	PO Number	Quote Number
05/23/23	734-544-4000		ES302470

Inventory	Style/Item	Color/Description	Quantity	Units	Price	Extension
		1. AAC will perform up to one hour of normal floor prep. Any additional floor prep will increase the cost of materials and labor.				
L/FURNITURE REMOVED	CUSTOMER TO MOVE FURNITURE		1.00	EA	0.00	0.00
		Customer to move all furniture out of the room. There will be a charge if any furniture is not moved.				
PALLET FREIGHT CHARGE	PALLET FREIGHT CHARGE/OVER 5 BXS		1.00	EA	175.00	175.00

1. The customer will remove the lockers and benches prior to the installation of the flooring.
2. The cove base will not be installed behind the lockers.

05/23/23 — 11:16AM

Sales Representative(s):
STEVE PIESKE (2)

Material:	6,984.77
Service:	5,004.20
Misc. Charges:	0.00
Sales Tax:	419.09
Misc. Tax:	0.00
QUOTE TOTAL:	**$12,408.06**

Please send all checks and mail to:

PO BOX 346
Saline, MI 48176

ANN ARBOR CARPETS, INC.
PO BOX 346
SALINE, MI 48176
Telephone: 734-769-1710 Fax: 734-769-4849

ES302470

QUOTE

Sold To	Ship To
YPSILANTI TOWNSHIP 1405 HOLMES RD. YPSILANTI, MI 48198	YPSILANTI TOWNSHIP 1405 HOLMES RD. YPSILANTI, MI 48198

Quote Date	Tele #1	PO Number	Quote Number
05/23/23	734-544-4000		ES302470

Inventory	Style/Item	Color/Description	Quantity	Units	Price	Extension

*****QUOTE PRICING VALID FOR 30 DAYS FROM ABOVE DATE
***** ALL ORDERS ARE SUBJECT TO MEASURE FOR FINAL PRICING
***** WE MAKE EVERY EFFORT TO COMPLETE YOUR INSTALLATION IN A TIMELY & PROFESSIONAL MANNER. HOWEVER, WE WILL NOT BE RESPONSIBLE FOR INCIDENTAL EXPENSE, i.e.: TIME LOST FROM WORK, HOTELS, MEALS, INCONVENIENCE, etc...

The customer will be responsible for the cost to correct any unforeseen subfloor issues. This includes the removal and disposal of additional layers of existing flooring. The labor wil be billed at $75 per man hour, plus the cost of any necessary materials.

The **person signing this quote/estimate**, whether signing for his/her own account or on behalf of another individual, partnership, limited liability company or corporation, **personally guarantees payment** of any and all sums to become due and owing to Ann Arbor Carpets Flooring America for products or labor provided.

Special orders can not be returned.
I have read and approve this estimate and am ready to proceed with the order.

X_____

05/23/23 11:16AM

Sales Representative(s):
STEVE PIESKE (2)

Material:	6,984.77
Service:	5,004.20
Misc. Charges:	0.00
Sales Tax:	419.09
Misc. Tax:	0.00
QUOTE TOTAL:	**$12,408.06**

Please send all checks and mail to:

PO BOX 346
Saline, MI 48176

Proposal

6/9/2023

Charter Township of Ypsilanti
Attn: Corey Rippey
7200 S. Huron River Drive
Ypsilanti, MI 48198
734-544-4000 Email crippey@ypsitownship.org

We hereby propose to furnish the materials and perform the labor necessary for the completion of: **1405 Holmes Rd. Ypsilanti, MI**

Flooring Description: Beauflor style Pure color 966D

Area as follows: Main room, 2 offices, behind front desk, 1 office and 2 closets off the back entry, Women's room carpet area and Men's room carpet area.

Materials included:
6mm Vizqeen.
Flooring listed above.
Black vinyl cove base.
Transition moldings as need.

Scope of work:
We will remove and dispose of existing carpet and base.
We will install flooring listed above.
We will install transition molding.
We will install new vinyl base on the walls.
We will do minor prep as needed.
Please read this proposal, if it is not written in this proposal it is not included in your job.

Job Total: $14,773.00 (Reflects customer's tax-exempt status)
This price includes a 15% discount off the flooring.

Payment to be made as follows: *50% deposit, balance upon completion of job.*

Respectfully submitted by: Paul Reeves– Owner, G&K Floor Covering

Acceptance of Proposal
The above prices, specifications and conditions are satisfactory and hereby accepted. You are authorized to do the work as specified.

Date:)_____ Signature:)_____

Shamrock Floorcovering Services, Inc.

(734) 994-5770
Fax: (734) 994-5156

4454 Concourse Drive
Ann Arbor, Michigan 48108

BID

SUBMITTED BY: Dennis Irish

Job/Site Name: Ypsi Township
1405 Holmes Rd. Ypsilanti

Bid Date: 5/25/2023

crippey@ypsilantitownship.org

SECTION	COST
Base quote is to work in Open Lobby, reception and 5 offices	
Labor and equipment to demo and dispose of the existing carpet	$480.00
Labor and material to scarifi and or prep surface to creat smooth suitable surface to install new LVT flooring. Roppe Radius or any product of equal quality	$10,111.72
Labor and material to install new 4" cove base in above rooms	$882.00
ALT ADD locker rooms same conditions as above	
Womens	$949.75
Mens	$2,326.77
Total	**$14,750.24**
Allowance for the material cost INCLUDED in the above base quote 4.00 per sf delivered	$4,562.24

COMMENTS - NOTES - EXCLUSIONS

NO DEMO OR EXTRA PREP UNLESS NOTED

WCA Pyramid Award Best Subcontractor

CHARTER TOWNSHIP OF YPSILANTI
Holmes Road Flooring
Bid Opening: Wednesday, July 20th, 2023 at 10:00am

COMPANY NAME	BID AMOUNT	ADDENDUM	
Quality Affordable Construction	**$21,120.00**	**No**	
Rob's Flooring LLC	**$7,500.00**	**Yes**	

QUALITY AFFORDABLE CONSTRUCTION LLC
Building dreams and upgrading reality

QUOTE

From: Quality Affordable Construction
11450 Haggerty Rd Plymouth MI
Bradsparks46@yahoo.com
734-772-4307

INVOICE # 524
Date: 7-1-23

To: Charter Township of Ypsilanti Clerk's Office
Attention: Lisa Stanfield
7200 South Huron River Drive
Ypsilanti, MI 48197

Contact	Job	Payment terms	Start Date
Lisa Stanfield	1405 Holmes Rd	Net 30	7-24-23

Qty	Description		Line total
1	Remove all carpet and prep floors for LVT installation. Floor surface overall in good condition underneath carpet. Minor prep work on floor surface under carpet. All old material to be removed and properly disposed of.		$1,850
35	Installation of 1,600 sqft of LVT 12x12 commercial grade tile. (ARMSTRONG) Color TBD. With (ROBERTS) Adhesive. Rubber transition striping for all door jambs and where necessary. Labor and material included.		$17,700
10	Rubber Cover base (ROPPE) to be installed throughout the entire office. Color TBD		$970
1	20-yard dumpster for all construction trash and debris.		$600
	Project total is under 25,000. No Bonds required		0
	Prevailing wage labor rates will be $61 an hour		
	No permitting is necessary. All work is cosmetic and does not require a permit or inspection.		0
	5 days completion time		
	PROJECT TOTAL LABOR AND MATERIAL INCLUDED = $21,120		
		TOTAL	21,120

To accept this quotation, sign here and return:

_____

Township Supervisor
Brenda L. Stumbo
Township Clerk
Heather Jarrell Roe
Township Treasurer
Stan Eldridge

YPSILANTI TOWNSHIP
— RESIDENTIAL SERVICES DEPARTMENT —

Trustees
Ryan Hunter
John Newman II
Gloria Peterson
Debbie Swanson

TO: ALL PROSPECTIVE BIDDERS FOR THE CHARTER TOWNSHIP OF YPSILANTI RFP FOR THE FLOORING AT 1405 HOLMES RD

FROM: John Hines, Director – Recreation Department

DATE: July 11, 2023

RE: **Addendum #1**

Bidders must acknowledge receipt of Addendum #1 as it relates to the Charter Township of Ypsilanti's bidding document for the Flooring Project at 1405 Holmes Rd.

NOTICE:

1. Please note that under section "VINYL TILE SPECIFICATIONS" please omit the request • *Installation of Commercial grade vinyl composite tile (12" x 12") squares - color TBD.* For the purposes of this RFP, please use only bullet points:

   • Main room, 3 offices, 2 closets, 2 locker rooms

   • Estimate of 1600 square feet of LVT to complete the project

Please sign and the Acknowledgement below, attach this Addendum 1 to your front of your bidding document. Bids will not be accepted if Addendum 1 is not acknowledged in both locations. Lack of acknowledgement shall cause the bid to be rejected. Acknowledgement 1 by the bidder shall indicate full understanding and acceptance of the addendum in its entirety.

ACKNOWLEDGEMENT OF ADDENDUM 1:

(Authorized Signature)

Bobs Flooring LLC
(Name of Company)

Bid Amount: $7,500.00
Solicitation Number: 2023-14

Six Degrees Limited Warranty

ALL PRODUCTS

This document is intended to provide product warranty information of these products. Should you need a job specific product warranty or if there are any questions or concerns, please reach out to solutions@rhctechnical.com.

1. WARRANTY TERMS 1
   1.1 ALL TECHNICAL DATA MUST BE REVIEWED 1
   1.2 NOTICE OF DEFECT PRIOR TO INSTALLATION 2
   1.3 NOTICE OF DEFECT DURING OR AFTER INSTALLATION 2
2. PRODUCT WARRANTIES 2
   2.1 DEFINITIONS 2
      2.1.1 WEAR STATEMENT 2
      2.1.2 LIFETIME STATEMENT 2
      2.1.3 WATERPROOF STATEMENT 2
      2.1.4 LIMITED COMMERCIAL WARRANTY STATEMENT 2
      2.1.5 MANUFACTURERS WARRANTY STATEMENT 2
      2.1.6 ADHESIVE BOND WARRANTY STATEMENT 3
   2.2 INDIVIUAL PRODUCT GROUPS 3
      2.2.1 LUXURY VINYL TILE AND PLANK FLOORING PRODUCTS 3
      2.2.2 STAIR TREAD AND RISER PRODUCTS 4
      2.2.3 INSTALLATION PRODUCTS 4
3. WARRANTY EXCLUSIONS 4
4. NOTIFICATION OF WARRANTY CLAIM 5

Prior to acceptance of this document refer to product website to confirm that you have the most current revision. For additional technical support, send an e-mail to solutions@rhctechnical.com.

1. WARRANTY TERMS

Six Degrees Flooring (“Manufacturer”) warrants to its original purchaser that, at the time of delivery by the Manufacturer, the flooring products described in the Manufacturer’s Catalog as listed below will conform to Manufacturer’s published technical documents.

All warranties, whether expressed or implied, are contingent on the following requirements:

1.1 ALL TECHNICAL DATA MUST BE REVIEWED

Products must be installed in accordance with Manufacturer’s published architectural specifications, technical data sheets, care and maintenance documents and other relevant technical information provided by the manufacturer for the Products (“Technical Data”) available at the time of installation. This includes technical data sheets of all associated adhesive and maintenance products, as well as proper product and adhesive selection.

1.2 NOTICE OF DEFECT PRIOR TO INSTALLATION

Manufacturer requests notification of any defect prior to installation. If this occurs, we will replace the material at no charge to the Installer or End User. Failure to notify prior to installation could result in voided product warranty. The installation of defective material waves any right to product and/or labor reimbursement, *this includes directives to install from End User, General Contractor, or any other source other than RHC Technical department.*

1.3 NOTICE OF DEFECT DURING OR AFTER INSTALLATION

If defect is discovered during or after installation, notification must be made to us. We must be permitted the right to a sample or inspection of the installation. Upon inspection of the sample or installation, if we determine the product to be defective, **we** will repair or replace the determined defective product, subject to the limitations of this warranty, and prorated as described section relevant to the limited manufacturers' and/or limited wear warranty. Intentional installation of defective material waves any right to product and/or labor reimbursement.

2. PRODUCT WARRANTIES

All products carry a Limited Warranty including wear, conformity to written specifications and to be free from manufacturing defects, subject to the terms and conditions of this document. Warranties are not transferable.

Product Warranty period begins at the ***Date of Substantial Completion*** of the project if installation occurs within a reasonable timeframe of original purchase of the material for the project. This would also include any "attic stock" or additional material at distribution for said project.

Each product will be listed with the length of this warranty according to product group. We reserve the right to prorate replacement material and/or labor based on the length of the product warranty. Proration occurs at the following intervals of the warranty. During the first 25% of the warranty, we will provide 100% replacement costs, 26%-50% of the warranty we will provide material and 50% of the replacement labor costs, 51%-100% of the warranty we will provide material costs only.

2.1 DEFINITIONS

We understand industry standard terminology is understood and interpreted differently. We would like to clarify and establish our understanding of the following terminology regarding our limited warranty.

2.1.1 WEAR STATEMENT is understood to mean through the decorative layer or visible sampled surface of the material

2.1.2 LIFETIME STATEMENT is understood to mean the original installation within the original facility and is not transferrable

2.1.3 WATERPROOF STATEMENT is understood to mean the structural integrity of the Luxury Vinyl Tile and Plank Flooring products will not degrade due to contact with moisture/water in standard conditions (does not cover flooding). Waterproof Luxury Vinyl Tile and Plank Flooring should not be used to mitigate an existing moisture condition and cannot prevent issues associated or caused by excessive moisture or alkalis in the subfloor or conditions arising from hydrostatic pressure.

2.1.4 LIMITED COMMERCIAL WARRANTY STATEMENT is understood to mean the warranty covers manufacturing defects, materials, stated performance, and wear for the product for the length of time stated

2.1.5 MANUFACTURERS WARRANTY STATEMENT is understood to mean the warranty covers manufacturing defects for the product for the length of time stated.

2.1.6 ADHESIVE BOND WARRANTY STATEMENT is understood to mean the warranty covers the bond of the flooring with the stated adhesive for length of time stated. We do not cover or provide warranty for bond for any adhesives other than the listed Recommended Adhesives. If another adhesive is utilized, the stated warranty for the product remains in effect but the bond warranty for the adhesive and the stated length of the bond warranty for the adhesive will come from the adhesive manufacturer or distributing agent.

2.2 INDIVIUAL PRODUCT GROUPS

Warranty periods are described below with any statements that are not covered under the warranty. Refer to above section for terms and our meaning for the understanding of those terms. *If a product is not listed here, it is considered to not have a product performance warranty and Sixty (60) day manufacturer's warranty.*

2.2.1 LUXURY VINYL TILE AND PLANK FLOORING PRODUCTS

DeGradus Vinyl Plank & Tile & Quick Ship 2mm Vinyl Plank & Tile products carry the following warranties:

Ten (10) Year Limited Residential/Multi-Family Warranty

VaraCore Rigid Core 4mm Vinyl Plank & Tile products carry the following warranties:

Five (5) Year Limited Commercial Warranty

Five (5) Year Limited Commercial "Waterproof" Warranty

Fifteen (15) Year Limited Residential/Multi-Family Warranty

Fifteen (15) Year Limited Residential/Multi-Family "Waterproof" Warranty

Radius Vinyl Plank & Tile products carry the following warranties:

Ten (10) Year Limited Commercial Warranty

Twenty (20) Year Limited Residential/Multi-Family Warranty

Radius 2.0 Vinyl Plank & Tile products carry the following warranties:

Fifteen (15) Year Limited Commercial Warranty

Twenty (20) Year Limited Residential/Multi-Family Warranty

Quick Ship 3mm Vinyl Plank & Tile products carry the following warranties:

Fifteen (15) Year Limited Commercial Warranty

Twenty (20) Year Limited Residential/Multi-Family Warranty

Compass Vinyl Plank & Tile products carry the following warranties:

Twenty (20) Year Limited Commercial Warranty

Lifetime Limited Residential/Multi-Family Warranty

VaraCore Rigid Core 5mm with Attached Pad Vinyl Plank & Tile products the following warranties:

Twenty (20) Year Limited Commercial Warranty

Twenty (20) Year Limited Commercial "Waterproof" Warranty

Lifetime Limited Residential/Multi-Family Warranty

Lifetime Limited Residential/Multi-Family "Waterproof" Warranty

2.2.2 STAIR TREAD AND RISER PRODUCTS

Impression Vinyl Stair Tread products carry the following warranties:

Ten (10) Year Limited Commercial Warranty

Lifetime Limited Residential/Multi-Family Warranty

2.2.3 INSTALLATION PRODUCTS

Excelsior CSU-400 Cork Sound Underlayment & Excelsior FSU-410 Floating Sound Underlayment products carry the following warranties:

Ten (10) Year Limited Commercial Warranty

Excelsior SP-500 Spray Adhesive, Excelsior AW-510 Acrylic Wet-Set Adhesive, Excelsior AP-520 Roll-On / Trowelable Adhesive, Excelsior PS-525 Modified Pressure Sensitive Adhesive, Excelsior WB-600 Wall Base Adhesive, Excelsior EN-610 Epoxy Nose Filler, Excelsior C-631 Contact Adhesive, Excelsior U-705 Urethane Adhesive, & Excelsior EW-710 Urethane Enhanced Two-Part Epoxy Adhesive products carry the following warranties:

One (1) Year Manufacturer's Warranty

Five (5) Year Bond Performance Warranty

3. WARRANTY EXCLUSIONS

The above warranty time frames do not apply or cover any of the following scenarios: any expressed or implied promise made by any architect, designer, representative, sales agent, distributor, or installer without expressed, written consent from Manufacturer's technical staff.

Concerns pertaining to product shade, color or dimensional variations that are considered within normal manufacturing and/or industry standards and/or tolerances. Variations in embossing, mottling, color, or shade to any products to any photographs, printed brochures and samples provided as marketing tools. Products installed with visible and/or obvious manufacturing and/or shade defects. Products installed outside of product limitations found in Technical Data. Discoloration or damage caused by improper or incompatible cleaning products, disinfectants, floor finishes or finish removal products, as well as improper maintenance procedures, tools, or machinery. Discoloration or damage caused by subfloor or adhesive pH levels. Discoloration, fading, or damage from heavy sunlight and/or UV light exposure from direct and/or indirect glass-filtered sunlight.

Products that have not been installed in strict accordance with Installation Instructions and Technical Data related to that product. Products that have been installed with a non-approved adhesive that is not compatible adhesive or an adhesive creating concern approval is given in written form. Products that have been damaged by excessive topical water, from such causes as improper or excessive maintenance, broken or leaking plumbing, sink overflow, flooding, or weather conditions. Products that have been damaged by hydrostatic pressure, osmosis, excessive subfloor moisture or subfloor moisture-related issues. Products that have been damaged by negligence or accident, such as tears, burns, or cuts. Products that have been damaged by sharp, pointed objects, such as stiletto high heels, damaged high heels, spikes, or skates of any kind.

Products that have been damaged by incompatible materials, such as acids, alkalis, and solvents. Products that have been damaged by animal or vegetable fats, oils or grease and petroleum-based hydrocarbons and not designed for that application. Products installed outdoors as products are designed to perform within indoor applications only.

Products that have been damaged by circumstances beyond the reasonable control of Manufacturer, such as ambient or substrate conditions. Products that have been damaged or deformed by substrate imperfections, damage or improper substrate selection as stated by manufacturer (per Installation Instructions and Technical Data technical document). Any products that have been sold or resold as "seconds," "mill-run," "non-conforming," "as is" or otherwise denoted as non-standard quality. Unreasonable costs associated with product replacement, such as labor costs outside of pro-rated schedule, overtime and loss of use or business.

Except for the expressed warranties above, manufacturer makes no representations regarding the products, their use or performance and refuses all representations and warranties, whether expressed and/or implied, written and/or oral, with respect to the products, including the implied warranties of merchantability, fitness for a particular purpose, and non-infringement. Under no circumstances will manufacturer be liable for any consequential, incidental, indirect, punitive, or special damages, including lost profits. In no event shall manufacturer liability ever exceed the purchase price paid for the product at issue and an amount up to the original cost of labor and material for the affected installation area. The purchaser acknowledges that the remedies provided in this limited warranty are its sole and exclusive remedies, and manufacturer's sole obligation, for any breach of representation or warranty, is in lieu of all other remedies. Purchaser must bring any legal action for breach of warranty within one year after the claim or cause of action has accrued or period prescribed by the applicable statutes of limitation or repose, whichever comes first. Some states do not allow limitations on the length of implied warranties. Though this warranty gives the purchaser specific legal rights, the purchaser may also have additional legal rights afforded them by the appropriate state. Exclusions or limitations of incidental or consequential damages may vary by state. For further information, consult the appropriate state consumer affairs office or the state attorney general's office.

4. NOTIFICATION OF WARRANTY CLAIM

To be considered eligible for replacement under this documented warranty, notice must be made within ***fifteen (15) working days*** from date it was, or reasonably should have been discovered, by submission of a claim to the appropriate representative. No warranty claims will be processed if received more than ***thirty (30) days*** after the applicable warranty period has ended.

All warranty opportunities (claims) must be directed to:
RHC Technical
680 Waverly Road, Tuscumbia, Alabama 35674
P: (844) 393-4044
E: opportunities@rhctechnical.com

All claims should include a completed Opportunities (Claim) Form, along with any associated photos and independent testing reports conducted prior to installation or independent inspection reports conducted after irregularities are observed or suspected.

Manufacturer, or its designated representative, shall have the right to examine the Products and the flooring (including testing of the flooring and substrate) at the installation site with respect to any warranty claim. Any removal of installed Products prior to such examination will void this warranty. Manufacturer may require additional testing or verification of any such test obtained by the original purchaser.

Township Supervisor
Brenda L. Stumbo
Township Clerk
Heather Jarrell Roe
Township Treasurer
Stan Eldridge

YPSILANTI TOWNSHIP
— RECREATION DEPARTMENT —

Trustees
John Newman II
Gloria Peterson
Debbie Swanson
Ryan Tucker

MEMORANDUM

To: Charter Township of Ypsilanti Board of Trustees

From: John Hines, Interim Residential Services Director

Date: August 9, 2023

RE: Request authorization to seek sealed bids for Township Helpful Handbook and Recreation Guides.

The Recreation Department is requesting authorization to seek sealed bids for the design and publication of the Township Helpful Handbook and Recreation Guides.

Previously, the Township was in a three year agreement with Community Publishing for the publication of a helpful handbook/winter recreation guide, spring and winter recreation guide. The goal of this request is to again, send the Helpful Handbook each December as its own publication and not include the winter recreation guide. The recreation guides will primarily include for program details and information pertaining to the department. It will be mailed three times a year, December, March and August. Due to this split, the request for each guide length has shortened from 30 pages (In 2021) to 24 for the handbook and 16 for each guide.

John Hines
Interim Residential Services Director
jhines@ypsitownship.org
734-544-3817

THE CHARTER TOWNSHIP OF YPSILANTI, MICHIGAN

REQUEST FOR PROPOSALS FOR

MAGAZINE PRINT SERVICES

7200 S. Huron River Drive, Ypsilanti, MI 48197

Charter Township of Ypsilanti

REQUEST FOR PROPOSALS
MAGAZINE PRINT SERVICES

Sealed or digital proposals (via MITN) in response to this RFP addressed to the Clerk's Department will be accepted until **September 7, 2023 at 10:00 a.m. ET** at 7200 S. Huron River Drive, Ypsilanti, MI 48197 when bids will be publicly opened. All Requests for Proposals must be in the Ypsilanti Township's possession on or before the scheduled date and time (no late RFP will be accepted).

RFP documents can be obtained from the Township's website at https://ytown.org/departments-services/public-bid-postings or on the MITN at https://www.bidnetdirect.com/mitn/solicitations/open-bids/page1. Any questions in reference to these Proposals may be directed to The Clerk's Department at 734-544-4000.

RFP responses received after the deadline will not be considered. The Township shall evaluate the RFP on the basis of technical ability, experience, and ability to perform the work and factors identified within the attached RFP solicitation.

Ypsilanti Township reserves the right to refuse and reject any or all responses, waive any or all formalities or technicalities, accept the response or portions of the response determined to be the best value and most advantageous to the Township, and hold the responses for a period of 120 days without taking action. Ypsilanti Township reserves the right to accept responses from more than one firm determined to be the best option for the Township. Respondents are required to hold their responses firm for the same period of time.

All questions are due in writing no later than **September 1, 2023.**

Hand-delivered & Courier Submissions:
Clerk's Department
7200 S. Huron River Drive, Ypsilanti, MI 48197

LABELING INSTRUCTIONS: Envelopes must be clearly marked:

YPSILANTI TOWNSHIP REQUEST FOR PROPOSALS
MAGAZINE PRINT SERVICES

TABLE OF CONTENTS

SECTION 1: OBJECTIVES, AND BACKGROUND

SECTION 2: NOTICE TO PROPOSERS

SECTION 3: SUBMISSION OF PROPOSAL

SECTION 4: SCOPE OF WORK

SECTION 5: PRICING AND DELIVERY SCHEDULE

SECTION 6: PROPOSER'S QUESTIONNAIRE

SECTION 7: EXECUTION OF OFFER

SECTION 1

OBJECTIVES, AND BACKGROUND

1.1 Objectives of this Request for Proposal

The Ypsilanti Township ("**Township**") is soliciting proposals in response to this Request for Proposal ("**RFP**") from contractors, hereafter referred to collectively as "**Proposers**," to provide **MAGAZINE PRINT SERVICES** and related equipment as more particularly described in **Section 5** (Scope of Work) of this RFP.

1.2 Description of Township

The Charter Township of Ypsilanti, Michigan, is located east of Ann Arbor and west of Detroit along the I-94 corridor. Ypsilanti Township serves a population of approximately 55,000. Ypsilanti Township provides a full range of services, including fire protection, court services, recreational facilities and programming, golf, and solid waste services. The Township's operational commitment is to provide reliable and excellent service to citizens at competitive prices and to guide responsible stewardship of Township resources.

1.3 Project Background

Ypsilanti Township Magazine does not currently have any sort of lifestyle magazine. It prints, annually, a "Helpful Handbook" which serves as a guide to the Township and its related services. It also serves as the primary dissemination source for government information for this growing Township. The township also prints three "Recreation Guides" each year that get sent out in the winter, spring and fall.

Our goal is to enhance our current Helpful Handbook magazine to create a book that is useful for residents for the entire year and to adjust our recreation guides to be more efficient and informative with the information provided to residents.

1.4 Term of Agreement

If the Township enters into an Agreement as a result of this RFP, The Township anticipates the initial term of the Agreement will be for three (3) years ("**Initial Term**"), with the option, at the Township's discretion, to extend the Contractor's Services for two (2) additional terms of one (1) year each (each an "**Extension Term**"). The Initial Term and each Extension Term are collectively referred to as the "**Term**."

SECTION 2

NOTICE TO PROPOSERS

PROPOSER IS CAUTIONED TO READ THE INFORMATION CONTAINED IN THIS RFP CAREFULLY AND TO SUBMIT A COMPLETE RESPONSE TO ALL REQUIREMENTS AND QUESTIONS AS DIRECTED.

2.1 Submittal Deadline

Proposals must be received by the Township on or before **September 7,2023 at 10:00 a.m. ET** must be delivered to:

Proposals WILL be accepted in person, by United States Mail, by private courier service, or by submission through MITN. **Proposals WILL NOT** be accepted via oral communication, telephone, electronic mail, telegraphic transmission, or facsimile transmission. Proposals may be withdrawn prior to the above scheduled time set for closing. Alterations made before RFP closing must be initiated by respondents guaranteeing authenticity. Submittal of a response to this RFP constitutes an offer by the respondent. Once submitted, the Proposal becomes the property of Ypsilanti Township and as such the Township reserves the right to use any ideas contained in any response regardless of whether that respondent/firm is selected. Submission of a proposal in response to this solicitation, by any respondent, shall indicate that the respondent(s) has accepted the conditions contained in the RFP, unless clearly and specifically noted in the Proposal submitted and confirmed in the contract between the Township and the successful respondent. Proposals which do not comply with these requirements may be rejected at the option of the Township. No late Proposals will be accepted and will be returned to respondent unopened (if properly identified). Failure to meet RFP requirements may be grounds for disqualifying a proposal.

2.2 Inquiries and Interpretations

The Township specifically instructs all interested parties to restrict all contact and questions regarding this RFP to written communications forwarded to The Township Contact. The Township Contact must receive all questions or concerns no later than**, September 1, 2023.** The Township will have a reasonable amount of time to respond to questions or concerns. It is the Township's intent to respond to all appropriate questions and concerns; however, The Township reserves the right to decline to respond to any question or concern. Only Township responses that are made by formal written Addenda will be binding on the Township. Any verbal responses, written interpretations or clarifications other than Addenda to this RFP will be without legal effect. All Addenda issued by the Township prior to the submittal date will be and are hereby incorporated as part of this RFP for all purposes.

2.3 RFP Contact Person

Proposers will direct all questions, comments, or concerns regarding this RFP to the following Township contact ("**Township Contact**"):

Lisa Stanfield
Deputy Clerk
7200 S. Huron River Drive, Ypsilanti, MI
48197 Phone: (734) 544-4000
E-mail: lstanfield@ypsitownship.org

2.4 Public Information

Township considers all information, documentation and other materials submitted in response to this RFP to be of a non-confidential and non-proprietary nature and shall be subject to public disclosure under the Michigan Freedom of Information Act after the award of an Agreement.

2.5 Criteria for Selection

The successful Proposer, if any, selected by The Township in accordance with the requirements and specifications set forth in this RFP will be the Proposer that submits a proposal in response to this RFP on or before the Submittal Deadline that is the most advantageous to The Township. The successful Proposer is referred to as the "**Contractor**."

Proposer is encouraged to propose terms and conditions offering the maximum benefit to The Township in terms of (1) services to the Township, (2) total overall cost to the Township, and (3) project management expertise. Proposers should describe all applicable discounts that may be available to The Township in a contract for the Services.

An evaluation team from The Township will evaluate proposals. The evaluation of proposals and the selection of Contractor will be based on the information provided by Proposer in its proposal. The Township may give consideration to additional information if the Township deems such information relevant.

Based on the Evaluation Committee review, several firms may be short-listed, for further consideration and may be required to submit supplemental information and an interview or presentation. The Township reserves the right to reject all submissions.

After submission of a proposal but before final selection of Contractor is made, the Township may permit a Proposer to revise its proposal in order to obtain the Proposer's best and final offer. In that event, representations made by Proposer in its revised proposal, including price and fee quotes, will be binding on Proposer. Township is not obligated to select the Proposer offering the most attractive economic terms if that Proposer is not the most advantageous to the Township overall, as determined by the Township.

By submitting a proposal, Proposer acknowledges (1) Proposer's acceptance of [a] the Proposal Evaluation Process, [b] the Criteria for Selection, [c] the Scope of Work (ref. **Section 4** of this RFP), [d] the terms and conditions of the Agreement, and [e] all other requirements and specifications set forth in this RFP; and (2) Proposer's recognition that some subjective judgments must be made by the Township during this RFP process.

The criteria to be considered by The Township in evaluating proposals and selecting Contractor, will be those factors listed below with their relative weightings:

2.5.1 **Proposer’s Qualifications, Abilities, and Reputation: (30%)**

2.5.1.1 Proposer’s demonstrated competence and experience in providing the requested services, including the quality of Proposer’s references from past and present clients.

2.5.1.2 The qualifications, education, and experience of the team members proposed by Proposer to conduct and supervise its services for the Township.

2.5.1.3 Proposer’s past relationship with Ypsilanti Township, and Proposer’s experience performing the requested services for entities similar in nature.

2.5.1.4 Proposer’s ability to perform the required services within the time periods projected, based on Proposer’s demonstrated capabilities, staffing, financial stability, and creative resources.

2.6.1.5 Proposer’s demonstrated awareness of the present environments and likely future developments related to the requested services.

2.5.2 **Quality of Proposed Services: (35%)**

2.5.2.1 The overall demonstrated quality of Proposers' goods and/or services in accordance with the Scope of Work described in Section 5.
2.5.2.2 Quality Assurance Plan

2.5.3 **Cost: (35%)**

The cost to Township required to secure Proposer's proposed Services, including any long term costs.

2.5.4 **Responsiveness of Proposal**

The extent to which Proposer's response relates to the specific environment, requirements, and needs of Township; the quality and level of substantive detail and clarity of content provided in Proposer's response.

2.5.5 **Threshold Criteria Not Scored:**

(i) Ability of Township to comply with laws regarding Historically Underutilized Businesses; and
(ii) Ability of Township to comply with laws regarding purchases from persons with disabilities.

2.5.6 **Supplemental Consideration**. As a supplement to the above-described criteria, Township may give consideration to any additional information and documentation submitted by a Proposer if Township deems such information to be relevant, and to serve the best interests of, and provide the best value to, Township.

2.6 Key Events Schedule

Issuance of RFP	August 16, 2023
Deadline for Questions/Concerns	September 1, 2023
Submittal Deadline	**September 7, 2023 at 10:00 a.m. ET**

SECTION 3M

SUBMISSION OF PROPOSAL

3.1 Submission of Proposal

3.1.1 Should the proposer choose to submit hard copies, in person, they shall submit two (2) identical copies of its *entire* proposal. An *original* signature by an authorized officer of Proposer **must** appear on the Execution of Offer (ref. **Section 7)** of at least one (1) copy of the submitted proposal. **The copy of the Proposer's proposal bearing an original signature should contain the mark "original" on the front cover of the proposal**.

Should the proposer choose to submit virtually through the MITN process, please follow all processes and procedures laid out via the virtual submission experience.

3.2 Preparation and Submittal Instructions

3.2.1 Execution of Offer

Proposer must complete, sign and return the attached Execution of Offer (ref. **Section 7**) as part of its proposal. The Execution of Offer must be signed by a representative of Proposer duly authorized to bind the Proposer to its proposal. Any proposal received without a completed and signed Execution of Offer may be rejected by the Township, in its sole discretion.

3.2.2 Proposers Questionnaire

Respondent shall provide responses to all of the questions identified in the questionnaire in **Section 6.**

3.2.3 Overview of Proposed System / Scope of Services

This section of the proposal should include a general discussion of the proposer's overall understanding of the project and the scope of work, as defined in **Section 4**, proposed.

3.2.4 Sample Documents

Proposers should include sample copies of the documents and/or reports outlined in the scope of work (Section 5). Although they are sample forms, the documents must contain all material terms so that the Township can fairly evaluate the proposer's forms.

3.2.5 Cost Proposal

Proposer must complete and return the Cost Proposal (ref. **Section 5** of this RFP), as part of its proposal. In the Cost Proposal, the Proposer should describe in detail (a) the total fees for the entire scope of the Services; and (b) the method by which the fees are calculated. The fees must be inclusive of all associated costs for delivery, labor, insurance, taxes, overhead, and profit.

The Township will not recognize or accept any charges or fees to perform the Services that are not specifically stated in the Cost Proposal

In the Cost Proposal, Proposer should describe each significant phase in the process of providing the Services to The Township, and the time period within which Proposer proposes to be able to complete each such phase.

3.2.6 Additional Information

1. Insurance Certificates
2. Supplementary Information
3. Other supporting materials and work portfolio which demonstrates the firm's work quality

3.3 Proposal Validity Period

Each proposal must state that it will remain valid for Township's acceptance for a minimum of **one hundred twenty (120)** days after the Submittal Deadline, to allow time for evaluation, selection, and any unforeseen delays.

SECTION 4

SCOPE OF WORK

4.1 General

The minimum requirements and the specifications for the Services, as well as certain requests for information to be provided by Proposer as part of its proposal, are set forth below. As indicated in **Section 2.5** of this RFP, the successful Proposer is referred to as the "**Contractor**."

4.2 Minimum Requirements

Qualified vendors shall be responsible for the following minimum services:

4.2.1 Printing and assembling 15,500 copies of Ypsilanti Township Helpful Handbook once per year (December) and Ypsilanti Township Recreation Guide three times per year (January-March, April-August and September-December.

4.2.1.a: Approximately 14,500 are to be mailed by Contractor (depending on up-to-date address list from the Township's Assessing Department)
4.2.1.b: The remaining are to be hand delivered for distribution at the Ypsilanti Township's Civic and Community Centers.

4.2.2 Complete design, setup and layout utilizing Township provided content and photos.

4.2.3 Magazine must be printed and assembled using flat 11" x 17" & finished 8.5" x 11".

4.2.4 Helpful Handbook Magazine is 24 pages self-cover.

Recreation Guides are 16 pages self-cover

4.2.5 The Cover Stock shall be 80# Silk Cover-4/4 with Satin Varnish or specified equivalent commodity stock held by printer.

4.2.6 Text Pages Stock shall be 80# silk text-4/4 with Satin Varnish or specified equivalent commodity stock held by printer.

4.2.7 The magazine must be saddle stitched and trimmed to size.

4.2.8 The magazine must be Web Press or Sheet Fed.

4.2.9 Ability to print the publication within 5 days of upload from the Township.

4.2.10 Guaranteed ship/delivery to post office on the 5th day.

4.2.11 Must be able to provide mail prep/inkjet services.

4.2.12 Handbook must be able to include removable magnet for waste schedule.

SECTION 5

PRICING AND DELIVERY SCHEDULE

Proposal of: _____
(Proposer Company Name)

To: **The Ypsilanti Township**

RFP Title: **MAGAZINE PRINT SERVICES**

Having carefully examined all the specifications and requirements of this RFP and any attachments thereto, the undersigned proposes to furnish the services required pursuant to the above-referenced Request for Proposal upon the terms quoted below.

5.1 Pricing for Services

Proposer shall include in Proposal a pricing list of all services required for this project as described in Section 5. Do NOT use “To Be Determined” or similar annotations for cost estimates

Price per Helpful Handbook: $_____

Price per Recreation Guide: $_____ Each

Price per Year: $_____

Additional fees must be itemized and defined below:

SECTION 6

PROPOSER'S GENERAL QUESTIONNAIRE

Proposals must include responses to the questions contained in this Proposer's General Questionnaire. Proposer should reference the item number and repeat the question in its response. In cases where a question does not apply or if unable to respond, Proposer should refer to the item number, repeat the question, and indicate N/A (Not Applicable) or N/R (No Response), as appropriate. Proposer will explain the reason when responding N/A or N/R.

6.1 Proposer Profile

6.1.1 Number of years in Business: _____

State of incorporation: _____

Number of Employees: _____

Name of Parent Corporation, if any _____

6.1.2 State whether Proposer will provide a copy of its financial statements for the past two (2) years, if requested by the Township.

6.1.3 Is Proposer currently for sale or involved in any transaction to expand or to become acquired by another business entity? If yes, Proposer will explain the expected impact, both in organizational and directional terms.

6.1.4 Is Proposer currently in default on any loan agreement or financing agreement with any bank, financial institution, or other entity? If yes, Proposer will specify the pertinent date(s), details, circumstances, and describe the current prospects for resolution.

6.1.5 Proposer will provide a customer reference list of no less than three (3) organizations with which Proposer currently has contracts and/or to which Proposer has previously provided services (within the past five (5) years) of a type and scope similar to those required by Township's RFP. Proposer will include in its customer reference list the customer's company name, contact person, telephone number, project description, length of business relationship, and background of services provided by Proposer.

6.1.6 Does any relationship exist (whether by family kinship, business association, capital funding agreement, or any other such relationship) between Proposer and any employee of Township? If yes, Proposer will explain.

6.2 Miscellaneous

6.2.1 Proposer will provide a list of any additional services or benefits not otherwise identified in this RFP that Proposer would propose to provide to Township.

6.2.2 Proposer will provide details describing any unique or special services or benefits offered or advantages to be gained by Township from doing business with Proposer. Additional services or benefits must be directly related to the goods and services solicited under this RFP.

6.2.3 Does Proposer have a contingency plan or disaster recovery plan in the event of a disaster? If so, then Proposer will provide a copy of the plan.

SECTION 7

EXECUTION OF OFFER

Proposal of: _____
(Proposer Company Name)

To: **The Ypsilanti Township**

RFP Title: **MAGAZINE PRINT SERVICES**

This Proposal shall remain in effect for the Proposal Validity Period (ref Section 3.3) and shall be exclusive of federal excise and state and local sales tax (exempt).

The person signing this Response on behalf of the Proposer represents to Owner that:

(1) The information provided herein is true, complete and accurate to the best of the knowledge and belief of the undersigned; and

(2) He/she has full authority to execute this response

(3) Proposer has received the Addenda to this RFP.

Executed this ____day of _____, 2023

_____ _____
Entity Name Signature

_____ _____
Street & Mailing Address Print Name of Signatory

_____ _____
Township, State, and Zip Title of Signatory

_____ _____
Telephone Number Email Address

_____
Mobile Number

Township Supervisor
Brenda L. Stumbo
Township Clerk
Heather Jarrell Roe
Township Treasurer
Stan Eldridge

YPSILANTI TOWNSHIP
— RECREATION DEPARTMENT —

Trustees
Ryan Hunter
John Newman II
Gloria Peterson
Debbie Swanson

MEMORANDUM

To: Charter Township of Ypsilanti Board of Trustees

From: John Hines, Interim Residential Services Director

CC: Steve Agdorny, Special Projects

Date: August 9, 2023

RE: Request Authorization to seek sealed bids Park Entrance Signage Design and Installation

The Residential Services Department is requesting authorization to seek sealed bids for signage for seventeen (17) parks.

As a continuation of the Township Branding initiative that began at the end of 2022, the Residential Services Department is requesting to go out to bid on the design, fabrication and installation of park signs for seventeen (17) of the Townships Parks. The request is being made to follow along with the approved brand standards, include Ypsilanti Township logo on signs and to replace the aging signs, of which multiple are showing wear and need maintenance on. Park sign size requested in at minimum similar to what is at the parks currently. Parks not currently listed in RFP, will also have signs purchased for them, but they will be a different size and need a design separate than what will be chosen for this project.

Bids will be accepted on Thursday, August 31st at which time they will be publicly opened at 10:00 a.m. Staff will return to the Board of Trustees to recommend and award the selection of a bidder.

John Hines
Interim Residential Services Director
jhines@ypsitownship.org
734-544-3817

The Charter Township of Ypsilanti is seeking bids for:

Park Entrance Signage Design & Installation

SCOPE OF PROJECT:

Ypsilanti Township is seeking quotes for the design, and installation of new park entrance signage at:

Ford Lake Park, 9075 S. Huron River Dr. (2-sided)

Lakeside Park, 9999 Textile Rd. (1-Side)

North Hydro Park, 2599 Bridge Rd. (1-side)

Loon Feather Point Park, 1340 S. Grove St. (1-side)

North Bay Park, 1001 Huron St. (1-side)

Ford Heritage Park, 8399 Textile Rd. (2-sided)

Hewen's Creek Park, 6515 Bemis Rd. (1-side)

West Willow Park. Tyler Rd. (1-side)

Nancy Park, Marcus Avenue (1-side)

Lakeview Park, Grove Rd. (2-sided)

Community Center Park (2-sided)

Harris Park, 59 S. Harris Rd. (1-sided)

Sugar Brook Park, 1511 Andrea (1-side)

Clubview Park, 185 S. Clubview Dr. (2-side)

Burns Park, 2060 Harding Ave. (1-side)

CommUnity Skate Park (2-side)

Appleridge Park, 2899 E. Clark Rd. (1-side)

Bids received will be publicly opened and read. Bids may be submitted in person to the Ypsilanti Township Clerk's Office labeled "Park Entrance Signage" or via MITN. Bids sent via email or by any other electronic means will not be accepted. For questions related to the bid, please contact Deputy Clerk, Lisa Stanfield at lstanfield@ypsitownship.org .

Charter Township of Ypsilanti
Clerk Heather Jarrell Roe
7200 S. Huron River Drive, Ypsilanti, MI 48197

ADHERENCE TO CONTRACT PROVISION CHECKLIST:

- **Prevailing Wage Provision** (If Applicable).
- **Bonds:** (If project/bid is over $25,000.00)
- **Performance Bond:** (If required usually equal to amount of the bid)
- **Maintenance** & **Guarantee Bond:** (If required)
- **Bid Bond or Surety Bond:** (If required usually 5% of bid)
- **Insurance Certificates:** Workers Compensation - $500,000 limit each accident. General Liability - (combined single limit of $1,000,000.00 each occurrence for bodily injury & property damage) must include 60 day written notice for change of coverage cancellation or non-renewable coverage
- **Protective Policy:** (combined single limit of $1,000,000.00 each occurrence for bodily injury & property damage) Must Name **"The Charter Township of Ypsilanti and it's past, present, and future elected Officials, Appointed Commissions and Boards, Agents and Employees shall be named as "Additional named Insured" (unless otherwise approved by the Township Attorney) on the General Liability Policy with respect to the services provided under this Contract".**
- **Automobile Liability:** covers owned, hired and non-owned vehicles with personal protection insurance and property protection. Includes residual liability insurance with a combined single limit of $1,000,000.00 each accident for bodily injury and property damage.
- **Builder's Risk:** (Required if over $25,000.00)
- **Umbrella Policy/Excess Coverage:** (Optional)
- **Correct Coverage Amounts -Township Named as "Additional Named Insured"**

The Charter Township of Ypsilanti general requirements for this project are as follows:

- PERMITS: The Contractor shall furnish and pay for all permits and inspections required for his work.
- CODES: All work performed shall comply with all applicable codes and ordinances including all Building Codes, Mechanical Codes, Plumbing Codes, Electrical Codes and Fire Codes. If required by the local codes the building systems affected by this work shall be brought up to current code unless grandfathered under the code.

PRICING SHALL INCLUDE:

- Performance and Payment Bond costs
- Prevailing Wage Labor Rates
- Costs of all Permits and required inspections.

PROPOSAL DELIVERY:

- Sealed bids will be accepted until **Thursday, August 31, 2023 at 10 AM** at which time all bids will be opened and read aloud. Bid proposals may be submitted by USPS mail, hand delivered, or electronically through MITN. Bids submitted by fax or email will not be accepted. Please provide two (2) sealed copies of the bid proposal to:

Charter Township of Ypsilanti Clerk's Office
Attention: Lisa Stanfield
7200 South Huron River Drive
Ypsilanti, MI 48197

Sealed bids must be plainly marked " Park Entrance Signage "

PARK SIGN SPECIFICATIONS:

- Signs to made from a material to withstand adverse weather conditions.
- Posts to be sized such to withstand high winds.
- Posts to minimum of 42” in the ground and secured with concrete.
- All signs to display park name minimum 10” lettering, Space for Ypsilanti township logo 18”x18” minimum, and when appropriate space for mounting grant seals.
- All signs to be minimum 31”x96” of viewing area.
- Signage Design is open and variations are welcome. However a complete system solution is the expectation for bidding.

SIGN REMOVAL:

- Remove and legally dispose of existing signage.
- Site preparation including leveling where necessary. TBD at least one week prior to project start.
- Finishing prep and cleansing.
- Provide copies of product & installation warranty.

Project shall adhere to any applicable Michigan Building Code or IFC requirements and specifications related to this project.

- All workmanship according to any Michigan Building Code 2018 or IFC 2018 requirements.
- Secure any or all required permits from Ypsilanti Township

LOGO:

YPSILANTI
TOWNSHIP

Examples:

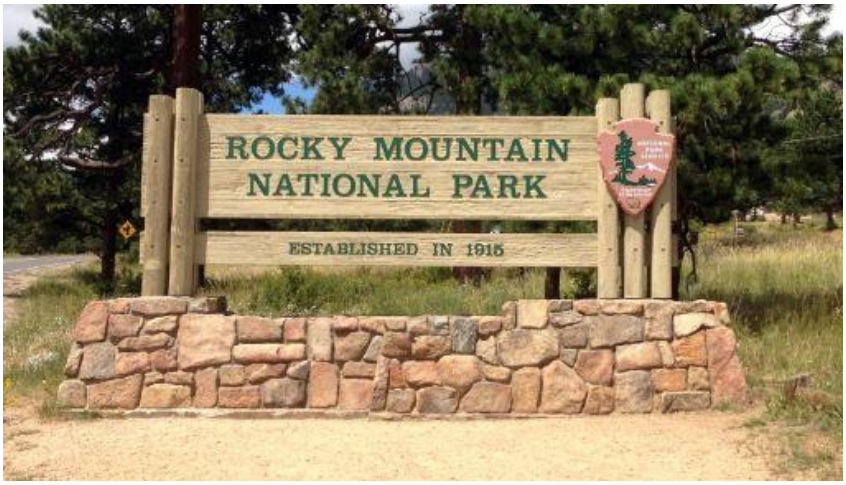
ROCKY MOUNTAIN
NATIONAL PARK
ESTABLISHED IN 1915

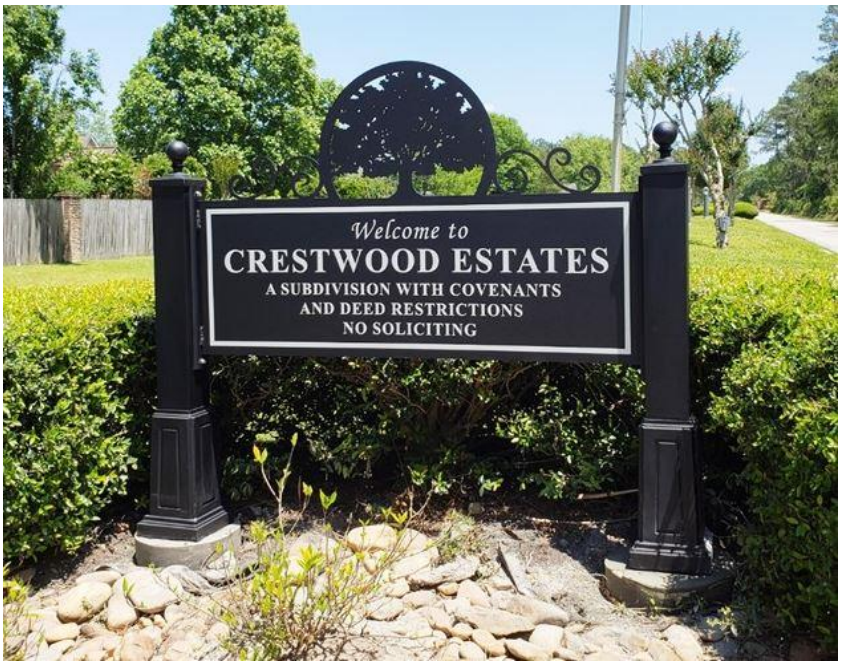
Welcome to
CRESTWOOD ESTATES
A SUBDIVISION WITH COVENANTS
AND DEED RESTRICTIONS
NO SOLICITING

QUARRY PARK
SARATOGA
QUARRY PARK
22000 CONGRESS SPRINGS ROAD

Township Supervisor
Brenda L. Stumbo
Township Clerk
Heather Jarrell Roe
Township Treasurer
Stan Eldridge

YPSILANTI TOWNSHIP
— RESIDENTIAL SERVICES DEPARTMENT —

Trustees
Ryan Hunter
John Newman II
Gloria Peterson
Debbie Swanson

MEMORANDUM

To: Charter Township of Ypsilanti Board of Trustees

From: John Hines, Interim Residential Services Director

CC: Javonna Neel, Accounting Director

Date: August 9, 2023

RE: Request Authorization to seek sealed bids for the renovation of Clubview Park Tennis Courts as part of the mDNR Land and Water Conservation Fund Development Project Agreement.

The Residential Services Department is requesting authorization to seek sealed bids for the renovation and construction of the Clubview Park Tennis Courts as part of the mDNR Land and Water Fund Development Project Agreement.

This grant is a 2021 mDNR LWCF grant which is being used to renovate the tennis courts at Clubview Park, renovate the fencing and to restore surrounding grounds area. The plan includes the transition from two tennis courts to one tennis court and two (2) pickleball courts. Specific bid dates are to be determined in Fall 2023 with Construction planned for early 2024.

Staff will return to the Board of Trustees to recommend and award the selection of a bidder.

Please find attached this memorandum the proposed construction documents and the bidding package as created by Spicer Group.

John Hines
Interim Residential Services Director
jhines@ypsitownship.org
734-544-3817

BIDDING DOCUMENTS
FOR

CLUBVIEW PARK IMPROVEMENTS

YPSILANTI CHARTER TOWNSHIP
YPSILANTI, MICHIGAN

Prepared By:
SPICER GROUP, INC.

MAY 2023

Plans Included

D-5627-01 through 06

Project I.D. Number: 133251SG2022

TABLE OF CONTENTS

Division	Section Title	Pages
BIDDING / CONTRACT DOCUMENTS (EJCDC)		
C-111	ADVERTISEMENT	1
C-200	INSTRUCTIONS TO BIDDERS	8
C-220	AFFIDAVIT OF COMPLIANCE IRAN LINKED BUSINESS	1
C-410	BID FORM	5
C-510	NOTICE OF AWARD	1
C-520	AGREEMENT	7
C-550	NOTICE TO PROCEED	1
C-610	PERFORMANCE BOND	3
C-615	PAYMENT BOND	4
C-620	CONTRACTORS APPLICATION FOR PAYMENT	2
C-625	CERTIFICATE OF SUBSTANTIAL COMPLETION	1
C-700	GENERAL CONDITIONS	65
C-800	SUPPLEMENTARY CONDITIONS	5
C-940	WORK CHANGE DIRECTIVE	1
C-941	CHANGE ORDER	1
C-942	FIELD ORDER	1
WAGE REQUIREMENTS		
	LIVING WAGE ORDINANCE	3
	PREVAILING WAGE ORDINANCE	2
	WAGE DECISION	11
DIVISION 01 - GENERAL REQUIREMENTS		
01 10 00	SUMMARY	2
01 20 00	PRICE AND PAYMENT PROCEDURES	4
01 25 00	SUBSTITUTION PROCEDURES	2
01 30 00	ADMINISTRATIVE REQUIREMENTS	3
01 32 16	CONSTRUCTION PROGRESS SCHEDULE	3
01 33 00	SUBMITTAL PROCEDURES	7
01 40 00	QUALITY REQUIREMENTS	4
01 50 00	TEMPORARY FACILITIES AND CONTROLS	4
01 60 00	PRODUCT REQUIREMENTS	2
01 70 00	EXECUTION AND CLOSEOUT REQUIREMENTS	6
DIVISION 11 -		
11 68 23.33	TENNIS AND PICKLEBALL EQUIPMENT	2
DIVISION 31 - EARTHWORK		
31 05 13	SOILS FOR EARTHWORK	2
31 05 16	AGGREGATES FOR EARTHWORK	3

31 10 00	SITE CLEARING	3
31 23 16	EXCAVATION	3
31 23 23	FILL	3
DIVISION 32 - EXTERIOR IMPROVEMENTS		
32 12 16	ASPHALT PAVING	5
32 18 23.53	TENNIS AND PICKLEBALL SURFACE	4
32 31 13	CHAIN LINK FENCES AND GATES	6
32 91 19	LANDSCAPE GRADING	3
32 92 19	SEEDING	4

END OF TABLE OF CONTENTS

CHARTER TOWNSHIP OF YPSILANTI

YPSILANTI, MICHIGAN
CLUBVIEW PARK IMPROVEMENTS

ADVERTISEMENT FOR BIDS

Sealed Bids for the **Clubview Park Tennis and Pickleball Courts** will be received by CLERK'S OFFICE, Ypsilanti Township Civic Center, 7200 S. Huron River Dr., Ypsilanti MI., 48197, until **2:00 p.m.** local time on **XXXXX**, at which time the Bids received will be publicly opened and read.

The Project consists of demolishing existing tennis courts and constructing new tennis and pickleball courts in their place.

This project is funded with a Michigan Department of Natural Resources (DNR) Land and Water Conservation Fund grant. All relevant State and/or Federal requirements will apply. This project does not require Davis-Bacon wage rates.

The Issuing Office for the Bidding Documents is: Spicer Group, Inc., 125 Helle Blvd., Suite 2, Dundee, MI 48131, Jennifer Chehab (248) 836-8436, jennifer.chehab@spicergroup.com. The contract documents for bidding purposes are available beginning XXXXXX on the Bidding section of the Spicer Group website at www.spicergroup.com, Bidding tab. You may view the digital project bidding documents by entering Quest project number **XXXXXX** on the website's project search page. Please contact Quest CDN Customer Support at (952)233-1632 or info@questcdn.com for assistance in free membership registration, downloading and working with digital project information.

Use the Bid Form in the specifications for submittal of sealed bid. **You must download the Contract Documents from Quest CDN to bid on the project, to be included on the planholders list, and to receive Addenda**. The Contractor is responsible for ensuring all addendums have been received and acknowledged prior to submittal of the bid.

Bid security shall be furnished in accordance with the Instructions to Bidders.

Partial sets of Bidding Documents will not be available from the Issuing Office. Neither Owner nor Engineer will be responsible for full or partial sets of Bidding Documents, including Addenda if any, obtained from sources other than the Issuing Office.

Owner: **Ypsilanti Charter Township**

By:

Title: **Clerk**

Date:

+ + END OF ADVERTISEMENT FOR BIDS + +

INSTRUCTIONS TO BIDDERS

ARTICLE 1 – DEFINED TERMS

1.01 Terms used in these Instructions to Bidders have the meanings indicated in the General Conditions and Supplementary Conditions. Additional terms used in these Instructions to Bidders have the meanings indicated below:

A. *Issuing Office* – The office from which the Bidding Documents are to be issued.

ARTICLE 2 – COPIES OF BIDDING DOCUMENTS

2.01 Complete sets of the Bidding Documents may be obtained from the Issuing Office in the number and format stated in the advertisement or invitation to bid.

2.02 Complete sets of Bidding Documents shall be used in preparing Bids; neither Owner nor Engineer assumes any responsibility for errors or misinterpretations resulting from the use of incomplete sets of Bidding Documents.

2.03 Owner and Engineer, in making copies of Bidding Documents available on the above terms, do so only for the purpose of obtaining Bids for the Work and do not authorize or confer a license for any other use.

ARTICLE 3 – QUALIFICATIONS OF BIDDERS

3.01 To demonstrate Bidder's qualifications to perform the Work, after submitting its Bid and within 3 days of Owner's request, Bidder shall submit (a) written evidence establishing its qualifications such as financial data, previous experience, and present commitments, and (b) the following additional information:

3.02 A Bidder's failure to submit required qualification information within the times indicated may disqualify Bidder from receiving an award of the Contract.

3.03 No requirement in this Article 3 to submit information will prejudice the right of Owner to seek additional pertinent information regarding Bidder's qualifications.

3.04 Bidder is advised to carefully review those portions of the Bid Form requiring Bidder's representations and certifications.

ARTICLE 4 – SITE AND OTHER AREAS; EXISTING SITE CONDITIONS; EXAMINATION OF SITE; OWNER'S SAFETY PROGRAM; OTHER WORK AT THE SITE

4.01 *Site and Other Areas*

A. The Site is identified in the Bidding Documents. By definition, the Site includes rights-of-way, easements, and other lands furnished by Owner for the use of the Contractor. Any additional lands required for temporary construction facilities, construction equipment, or storage of materials and equipment, and any access needed for such additional lands, are to be obtained and paid for by Contractor.

4.02 *Existing Site Conditions*

A. Subsurface and Physical Conditions; Hazardous Environmental Conditions

1. The Supplementary Conditions identify:

a. those reports known to Owner of explorations and tests of subsurface conditions at or adjacent to the Site.

b. those drawings known to Owner of physical conditions relating to existing surface or subsurface structures at the Site (except Underground Facilities).

c. reports and drawings known to Owner relating to Hazardous Environmental Conditions that have been identified at or adjacent to the Site.

d. Technical Data contained in such reports and drawings.

2. Owner will make copies of reports and drawings referenced above available to any Bidder on request. These reports and drawings are not part of the Contract Documents, but the Technical Data contained therein upon whose accuracy Bidder is entitled to rely, as provided in the General Conditions, has been identified and established in the Supplementary Conditions. Bidder is responsible for any interpretation or conclusion Bidder draws from any Technical Data or any other data, interpretations, opinions, or information contained in such reports or shown or indicated in such drawings.

3. If the Supplementary Conditions do not identify Technical Data, the default definition of Technical Data set forth in Article 1 of the General Conditions will apply.

B. Underground Facilities: Information and data shown or indicated in the Bidding Documents with respect to existing Underground Facilities at or contiguous to the Site are set forth in the Contract Documents and are based upon information and data furnished to Owner and Engineer by owners of such Underground Facilities, including Owner, or others.

C. Adequacy of Data: Provisions concerning responsibilities for the adequacy of data furnished to prospective Bidders with respect to subsurface conditions, other physical conditions, and Underground Facilities, and possible changes in the Bidding Documents due to differing or unanticipated subsurface or physical conditions appear in Paragraphs 5.03, 5.04, and 5.05 of the General Conditions. Provisions concerning responsibilities for the adequacy of data furnished to prospective Bidders with respect to a Hazardous Environmental Condition at the Site, if any, and possible changes in the Contract Documents due to any Hazardous Environmental Condition uncovered or revealed at the Site which was not shown or indicated in the Drawings or Specifications or identified in the Contract Documents to be within the scope of the Work, appear in Paragraph 5.06 of the General Conditions.

4.03 *Site Visit and Testing by Bidders*

A. Bidder shall conduct the required Site visit during normal working hours, and shall not disturb any ongoing operations at the Site.

B. On request, and to the extent Owner has control over the Site, and schedule permitting, the Owner will provide Bidder access to the Site to conduct such additional examinations, investigations, explorations, tests, and studies as Bidder deems necessary for preparing and submitting a successful Bid. Owner will not have any obligation to grant such access if doing so is not practical because of existing operations, security or safety concerns, or restraints on Owner's authority regarding the Site.

C. Bidder shall comply with all applicable Laws and Regulations regarding excavation and location of utilities, obtain all permits, and comply with all terms and conditions established by Owner or by property owners or other entities controlling the Site with respect to schedule, access, existing operations, security, liability insurance, and applicable safety programs.

D. Bidder shall fill all holes and clean up and restore the Site to its former condition upon completion of such explorations, investigations, tests, and studies.

4.04 *Owner's Safety Program*

A. Site visits and work at the Site may be governed by an Owner safety program. As the General Conditions indicate, if an Owner safety program exists, it will be noted in the Supplementary Conditions.

4.05 *Other Work at the Site*

A. Reference is made to Article 8 of the Supplementary Conditions for the identification of the general nature of other work of which Owner is aware (if any) that is to be performed at the Site by Owner or others (such as utilities and other prime contractors) and relates to the Work contemplated by these Bidding Documents. If Owner is party to a written contract for such other work, then on request, Owner will provide to each Bidder access to examine such contracts (other than portions thereof related to price and other confidential matters), if any.

ARTICLE 5 – BIDDER'S REPRESENTATIONS

5.01 It is the responsibility of each Bidder before submitting a Bid to:

A. examine and carefully study the Bidding Documents, and any data and reference items identified in the Bidding Documents;

B. visit the Site, conduct a thorough, alert visual examination of the Site and adjacent areas, and become familiar with and satisfy itself as to the general, local, and Site conditions that may affect cost, progress, and performance of the Work;

C. become familiar with and satisfy itself as to all Laws and Regulations that may affect cost, progress, and performance of the Work;

D. carefully study all: (1) reports of explorations and tests of subsurface conditions at or adjacent to the Site and all drawings of physical conditions relating to existing surface or subsurface structures at the Site that have been identified in the Supplementary Conditions, especially with respect to Technical Data in such reports and drawings, and (2) reports and drawings relating to Hazardous Environmental Conditions, if any, at or adjacent to the Site that have been identified in the Supplementary Conditions, especially with respect to Technical Data in such reports and drawings;

E. consider the information known to Bidder itself; information commonly known to contractors doing business in the locality of the Site; information and observations obtained from visits to the Site; the Bidding Documents; and the Site-related reports and drawings identified in the Bidding Documents, with respect to the effect of such information, observations, and documents on (1) the cost, progress, and performance of the Work; (2) the means, methods, techniques, sequences, and procedures of construction to be employed by Bidder; and (3) Bidder's safety precautions and programs;

F. agree, based on the information and observations referred to in the preceding paragraph, that at the time of submitting its Bid no further examinations, investigations, explorations, tests, studies, or data are necessary for the determination of its Bid for performance of the Work at the price bid and within the times required, and in accordance with the other terms and conditions of the Bidding Documents;

G. become aware of the general nature of the work to be performed by Owner and others at the Site that relates to the Work as indicated in the Bidding Documents;

H. promptly give Engineer written notice of all conflicts, errors, ambiguities, or discrepancies that Bidder discovers in the Bidding Documents and confirm that the written resolution thereof by Engineer is acceptable to Bidder;

I. determine that the Bidding Documents are generally sufficient to indicate and convey understanding of all terms and conditions for the performance and furnishing of the Work; and

J. agree that the submission of a Bid will constitute an incontrovertible representation by Bidder that Bidder has complied with every requirement of this Article, that without exception the Bid and all prices in the Bid are premised upon performing and furnishing the Work required by the Bidding Documents.

ARTICLE 6 – PRE-BID CONFERENCE

6.01 No pre-bid conference will be held for this project. Bidders are encouraged to visit the site prior to bidding on this project.

ARTICLE 7 – INTERPRETATIONS AND ADDENDA

7.01 All questions about the meaning or intent of the Bidding Documents are to be submitted to Engineer in writing. Interpretations or clarifications considered necessary by Engineer in response to such questions will be issued by Addenda delivered to all parties recorded as having received the Bidding Documents. Questions received less than seven days prior to the date for opening of Bids may not be answered. Only questions answered by Addenda will be binding. Oral and other interpretations or clarifications will be without legal effect.

7.02 Addenda may be issued to clarify, correct, supplement, or change the Bidding Documents.

ARTICLE 8 – BID SECURITY

8.01 A Bid must be accompanied by Bid security made payable to Owner in an amount of 5 percent of Bidder's maximum Bid price (determined by adding the base bid and all alternates) and in the form of a certified check, bank money order, or a Bid bond issued by a surety meeting the requirements of Paragraphs 6.01 and 6.02 of the General Conditions.

8.02 The Bid security of the apparent Successful Bidder will be retained until Owner awards the contract to such Bidder, and such Bidder has executed the Contract Documents, furnished the required contract security, and met the other conditions of the Notice of Award, whereupon the Bid security will be released. If the Successful Bidder fails to execute and deliver the Contract Documents and furnish the required contract security within 15 days after the Notice of Award, Owner may consider Bidder to be in default, annul the Notice of Award, and the Bid security of that Bidder will be forfeited. Such forfeiture shall be Owner's exclusive remedy if Bidder defaults.

8.03 The Bid security of other Bidders that Owner believes to have a reasonable chance of receiving the award may be retained by Owner until the earlier of seven days after the Effective Date of the Contract or 61 days after the Bid opening, whereupon Bid security furnished by such Bidders will be released.

8.04 Bid security of other Bidders that Owner believes do not have a reasonable chance of receiving the award will be released within seven days after the Bid opening.

ARTICLE 9 – CONTRACT TIMES

9.01 The number of days within which, or the dates by which, the Work is to be substantially completed and ready for final payment are set forth in the Agreement.

ARTICLE 10 – LIQUIDATED DAMAGES

10.01 Provisions for liquidated damages, if any, for failure to timely attain a Milestone, Substantial Completion, or completion of the Work in readiness for final payment, are set forth in the Agreement.

ARTICLE 11 – SUBSTITUTE AND "OR-EQUAL" ITEMS

11.01 The Contract for the Work, as awarded, will be on the basis of materials and equipment specified or described in the Bidding Documents without consideration during the bidding and Contract award process of possible substitute or "or-equal" items. In cases in which the Contract allows the Contractor to request that Engineer authorize the use of a substitute or "or-equal" item of material or equipment, application for such acceptance may not be made to and will not be considered by Engineer until after the Effective Date of the Contract.

11.02 All prices that Bidder sets forth in its Bid shall be based on the presumption that the Contractor will furnish the materials and equipment specified or described in the Bidding Documents, as supplemented by Addenda. Any assumptions regarding the possibility of post-Bid approvals of "or-equal" or substitution requests are made at Bidder's sole risk.

ARTICLE 12 – SUBCONTRACTORS, SUPPLIERS, AND OTHERS

12.01 A Bidder shall be prepared to retain specific Subcontractors, Suppliers, or other individuals or entities for the performance of the Work if required by the Bidding Documents (most commonly in the Specifications) to do so. If a prospective Bidder objects to retaining any such Subcontractor, Supplier, or other individual or entity, and the concern is not relieved by an Addendum, then the prospective Bidder should refrain from submitting a Bid.

12.02 Subsequent to the submittal of the Bid, Owner may not require the Successful Bidder or Contractor to retain any Subcontractor, Supplier, or other individual or entity against which Contractor has reasonable objection.

12.03 The apparent Successful Bidder, and any other Bidder so requested, shall within five days after Bid opening, submit to Owner a list of the Subcontractors or Suppliers.

If requested by Owner, such list shall be accompanied by an experience statement with pertinent information regarding similar projects and other evidence of qualification for each such Subcontractor, Supplier, or other individual or entity. If Owner or Engineer, after due investigation, has reasonable objection to any proposed Subcontractor, Supplier, individual, or entity, Owner may, before the Notice of Award is given, request apparent Successful Bidder to submit an acceptable substitute, in which case apparent Successful Bidder shall submit a substitute, Bidder's Bid price will be increased (or decreased) by the difference in cost occasioned by such substitution, and Owner may consider such price adjustment in evaluating Bids and making the Contract award.

12.04 If apparent Successful Bidder declines to make any such substitution, Owner may award the Contract to the next lowest Bidder that proposes to use acceptable Subcontractors, Suppliers, or other individuals or entities. Declining to make requested substitutions will constitute grounds for forfeiture of the Bid security of any Bidder. Any Subcontractor, Supplier, individual, or entity so listed and against which Owner or Engineer makes no written objection prior to the giving of the Notice of Award will be deemed acceptable to Owner and Engineer subject to subsequent revocation of such acceptance as provided in Paragraph 7.06 of the General Conditions.

ARTICLE 13 – PREPARATION OF BID

13.01 The Bid Form is included with the Bidding Documents.

A. All blanks on the Bid Form shall be completed in ink and the Bid Form signed in ink. Erasures or alterations shall be initialed in ink by the person signing the Bid Form. A Bid price shall be indicated for each section, Bid item, alternate, adjustment unit price item, and unit price item listed therein.

B. If the Bid Form expressly indicates that submitting pricing on a specific alternate item is optional, and Bidder elects to not furnish pricing for such optional alternate item, then Bidder may enter the words "No Bid" or "Not Applicable."

13.02 A Bid by a corporation shall be executed in the corporate name by a corporate officer (whose title must appear under the signature), accompanied by evidence of authority to sign. The corporate address and state of incorporation shall be shown.

13.03 A Bid by a limited liability company shall be executed in the name of the firm by a member or other authorized person and accompanied by evidence of authority to sign. The state of formation of the firm and the official address of the firm shall be shown.

13.04 A Bid by an individual shall show the Bidder's name and official address.

13.05 A Bid by a joint venture shall be executed by an authorized representative of each joint venturer in the manner indicated on the Bid Form. The official address of the joint venture shall be shown.

13.06 All names shall be printed in ink below the signatures.

13.07 The Bid shall contain an acknowledgment of receipt of all Addenda, the numbers of which shall be filled in on the Bid Form.

13.08 Postal and e-mail addresses and telephone number for communications regarding the Bid shall be shown.

13.09 The Bid shall contain evidence of Bidder's authority and qualification to do business in the state where the Project is located, or Bidder shall covenant in writing to obtain such authority and qualification prior to award of the Contract and attach such covenant to the Bid. Bidder's state contractor license number, if any, shall also be shown on the Bid Form.

ARTICLE 14 – BASIS OF BID

14.01 *Unit Price*

A. Bidders shall submit a Bid on a unit price basis for each item of Work listed in the unit price section of the Bid Form.

B. The "Bid Price" (sometimes referred to as the extended price) for each unit price Bid item will be the product of the "Estimated Quantity" (which Owner or its representative has set forth in the Bid Form) for the item and the corresponding "Bid Unit Price" offered by the Bidder. The total of all unit price Bid items will be the sum of these "Bid Prices"; such total will be used by Owner for Bid comparison purposes. The final quantities and Contract Price will be determined in accordance with Paragraph 13.03 of the General Conditions.

C. Discrepancies between the multiplication of units of Work and unit prices will be resolved in favor of the unit prices. Discrepancies between the indicated sum of any column of figures and the correct sum thereof will be resolved in favor of the correct sum.

14.02 *Allowances*

A. For cash allowances the Bid price shall include such amounts as the Bidder deems proper for Contractor's overhead, costs, profit, and other expenses on account of cash allowances, if any, named in the Contract Documents, in accordance with Paragraph 13.02.B of the General Conditions.

ARTICLE 15 – SUBMITTAL OF BID

15.01 With each copy of the Bidding Documents, a Bidder is furnished one Affidavit of Compliance – Iran Economic Sanctions Act (C210) This form must be signed, notarized and included with the submitted bid package.

15.02 Deliver two paper copies of the bid in a sealed envelope by the date and time prescribed to CLERK'S OFFICE, Ypsilanti Township Civic Center, 7200 S. Huron River Dr., Ypsilanti MI 48197. Please write in LARGE PRINT ON THE OUTSIDE OF THE ENVELOPE: BID FOR Clubview Park Improvements

15.03 Bids received after the date and time prescribed for the opening of bids, or not submitted at the correct location or in the designated manner, will not be accepted and will be returned to the Bidder unopened.

ARTICLE 16 – MODIFICATION AND WITHDRAWAL OF BID

16.01 A Bid may be withdrawn by an appropriate document duly executed in the same manner that a Bid must be executed and delivered to the place where Bids are to be submitted prior to the date and time for the opening of Bids. Upon receipt of such notice, the unopened Bid will be returned to the Bidder.

16.02 If a Bidder wishes to modify its Bid prior to Bid opening, Bidder must withdraw its initial Bid in the manner specified in Paragraph 16.01 and submit a new Bid prior to the date and time for the opening of Bids.

16.03 If within 24 hours after Bids are opened any Bidder files a duly signed written notice with Owner and promptly thereafter demonstrates to the reasonable satisfaction of Owner that there was a material and substantial mistake in the preparation of its Bid, that Bidder may withdraw its Bid, and the Bid security will be returned. Thereafter, if the Work is rebid, that Bidder will be disqualified from further bidding on the Work.

ARTICLE 17 – OPENING OF BIDS

17.01 Bids will be opened at the time and place indicated in the advertisement or invitation to bid and, unless obviously non-responsive, read aloud publicly. An abstract of the amounts of the base Bids and major alternates, if any, will be made available to Bidders after the opening of Bids.

ARTICLE 18 – BIDS TO REMAIN SUBJECT TO ACCEPTANCE

18.01 All Bids will remain subject to acceptance for the period of time stated in the Bid Form, but Owner may, in its sole discretion, release any Bid and return the Bid security prior to the end of this period.

ARTICLE 19 – EVALUATION OF BIDS AND AWARD OF CONTRACT

19.01 Owner reserves the right to reject any or all Bids, including without limitation, nonconforming, nonresponsive, unbalanced, or conditional Bids. Owner will reject the Bid of any Bidder that Owner finds, after reasonable inquiry and evaluation, to not be responsible. If Bidder purports to add terms or conditions to its Bid, takes exception to any provision of the Bidding Documents, or attempts to alter the contents of the Contract Documents for purposes of the Bid, then the Owner will reject the Bid as nonresponsive; provided that Owner also reserves the right to waive all minor informalities not involving price, time, or changes in the Work.

19.02 If Owner awards the contract for the Work, such award shall be to the responsible Bidder submitting the lowest responsive Bid.

19.03 Evaluation of Bids

A. In evaluating Bids, Owner will consider whether or not the Bids comply with the prescribed requirements, and such alternates, unit prices, and other data, as may be requested in the Bid Form or prior to the Notice of Award.

B. For the determination of the apparent low Bidder when unit price bids are submitted, Bids will be compared on the basis of the total of the products of the estimated quantity of each item and unit price Bid for that item, together with any lump sum items.

19.04 In evaluating whether a Bidder is responsible, Owner will consider the qualifications of the Bidder and may consider the qualifications and experience of Subcontractors and Suppliers proposed for those portions of the Work for which the identity of Subcontractors and Suppliers must be submitted as provided in the Bidding Documents.

19.05 Owner may conduct such investigations as Owner deems necessary to establish the responsibility, qualifications, and financial ability of Bidders and any proposed Subcontractors or Suppliers.

ARTICLE 20 – BONDS AND INSURANCE

20.01 Article 6 of the General Conditions, as may be modified by the Supplementary Conditions, sets forth Owner's requirements as to performance and payment bonds and insurance. When the Successful Bidder delivers the Agreement (executed by Successful Bidder) to Owner, it shall be accompanied by required bonds and insurance documentation.

ARTICLE 21 – SIGNING OF AGREEMENT

21.01 When Owner issues a Notice of Award to the Successful Bidder, it shall be accompanied by the unexecuted counterparts of the Agreement along with the other Contract Documents as identified in the Agreement. Within 15 days thereafter, Successful Bidder shall execute and deliver the required number of counterparts of the Agreement (and any bonds and insurance documentation required to be delivered by the Contract Documents) to Owner. Within ten days thereafter, Owner shall deliver one fully executed counterpart of the Agreement to Successful Bidder, together with printed and electronic copies of the Contract Documents as stated in Paragraph 2.02 of the General Conditions.

ARTICLE 22 – EQUAL EMPLOYMENT

22.01 Attention of Bidders is particularly called to the requirement for ensuring that employees and applicants for employment are not discriminated against on any illegal basis with respect to hire, tenure, terms, conditions, or privileges of employment, or a matter directly or indirectly related to employment, because of race, color, religion, national origin, age, sex, height, weight, marital status, partisan considerations, genetic information, or a disability that is unrelated to the individual's ability to perform the duties of a particular job or position as required by Public Act 453 of 1976 (Elliot-Larsen Civil Rights Act), Public Act 220 of 1976 (Persons with Disabilities Act), as amended, and Executive Directive 2019-09.

ARTICLE 23 – BUILD AMERICA, BUY AMERICA (BABA)

23.01 Attention of Bidders is particularly called to the requirement for ensuring that all of the iron, steel, manufactured products, and construction materials used in the project are produced in the United States." (Build America, Buy America Act, P.L. 117-58, Secs 70911 - 70917.

AFFIDAVIT OF COMPLIANCE-IRAN ECONOMIC SANCTIONS ACT
MICHIGAN PUBLIC ACT 517 OF 2012

The undersigned, as owner or authorized officer of the below named CONTRACTOR, pursuant to the compliance certification requirement by the State of Michigan, and as referenced by OWNER in the BIDDING DOCUMENTS, hereby certifies, represents and warrants that the CONTRACTOR (including its Officers, Directors and Employees) is not an "Iran linked business" as defined by the Iran Economic Sanctions Act, Michigan Public Act 517 of 2012 (THE ACT). And, that in the event CONTRACTOR is awarded a contract as a result of the aforementioned BIDDING DOCUMENTS, the Contractor will not become an "Iran linked business" at any time during the course of preforming the work or any services under the contract.

The CONTACTOR further acknowledges that any person who is found to have submitted a false certification is responsible for a civil penalty of not more than $250,000.00 or 2 times the amount of the contract or proposed contract for which the false certification was made, whichever is greater. The cost of the OWNER'S investigation and reasonable attorney fees may also be added in addition to the fine. Moreover, any person who submitted a false certification shall be ineligible to bid on any other of the OWNER'S projects for three (3) years from the date that it is determined that the person has submitted the false certification.

CONTRACTOR:

_____
Name of Contractor
By: _____
Its: _____
Date: _____

STATE OF _____}
ss.
COUNTY OF _____}

This instrument was acknowledged before me on the _____day of _____, ____
by_____.

_____
, Notary Public
_____ County, State of _____
My Commission expires: _____
Acting in the County of: _____

BID FORM
FOR CONSTRUCTION CONTRACTS

ARTICLE 1 – BID RECIPIENT

1.01 This Bid is submitted to:

Clerk's Office
Ypsilanti Township Civic Center
7200 S Huron River Dr
Ypsilanti, MI 48197

1.02 The undersigned Bidder proposes and agrees, if this Bid is accepted, to enter into an Agreement with Owner in the form included in the Bidding Documents to perform all Work as specified or indicated in the Bidding Documents for the prices and within the times indicated in this Bid and in accordance with the other terms and conditions of the Bidding Documents.

ARTICLE 2 – BIDDER'S ACKNOWLEDGEMENTS

2.01 Bidder accepts all of the terms and conditions of the Instructions to Bidders, including without limitation those dealing with the disposition of Bid security. This Bid will remain subject to acceptance for 45days after the Bid opening, or for such longer period of time that Bidder may agree to in writing upon request of Owner.

ARTICLE 3 – BIDDER'S REPRESENTATIONS

3.01 In submitting this Bid, Bidder represents that:

A. Bidder has examined and carefully studied the Bidding Documents, and any data and reference items identified in the Bidding Documents, and hereby acknowledges receipt of the following Addenda:

Addendum No.	**Addendum, Date**
_____	_____
_____	_____
_____	_____
_____	_____

If no addenda have been issued, insert "N/A". Bidder shall submit signed copies of the Addendum Acknowledgment receipt form issued with each addendum with the complete bid form.

B. Bidder has visited the Site, conducted a thorough, alert visual examination of the Site and adjacent areas, and become familiar with and satisfied itself as to the general, local, and Site conditions that may affect cost, progress, and performance of the Work.

C. Bidder is familiar with and has satisfied itself as to all Laws and Regulations that may affect cost, progress, and performance of the Work.

D. Bidder has carefully studied all: (1) reports of explorations and tests of subsurface conditions at or adjacent to the Site and all drawings of physical conditions relating to existing surface or subsurface structures at the Site that have been identified in the Supplementary Conditions, especially with respect to Technical Data in such reports and drawings, and (2) reports and drawings relating to Hazardous Environmental Conditions, if any, at or adjacent to the Site that have been identified in the Supplementary Conditions, especially with respect to Technical Data in such reports and drawings.

E. Bidder has considered the information known to Bidder itself; information commonly known to contractors doing business in the locality of the Site; information and observations obtained from visits to the Site; the Bidding Documents; and any Site-related reports and drawings identified in the Bidding Documents, with respect to the effect of such information, observations, and documents on (1) the cost, progress, and performance of the Work; (2) the means, methods, techniques, sequences, and procedures of construction to be employed by Bidder; and (3) Bidder's safety precautions and programs.

F. Bidder agrees, based on the information and observations referred to in the preceding paragraph, that no further examinations, investigations, explorations, tests, studies, or data are necessary for the determination of this Bid for performance of the Work at the price bid and within the times required, and in accordance with the other terms and conditions of the Bidding Documents.

G. Bidder is aware of the general nature of work to be performed by Owner and others at the Site that relates to the Work as indicated in the Bidding Documents.

H. Bidder has given Engineer written notice of all conflicts, errors, ambiguities, or discrepancies that Bidder has discovered in the Bidding Documents, and confirms that the written resolution thereof by Engineer is acceptable to Bidder.

I. The Bidding Documents are generally sufficient to indicate and convey understanding of all terms and conditions for the performance and furnishing of the Work.

J. The submission of this Bid constitutes an incontrovertible representation by Bidder that Bidder has complied with every requirement of this Article, and that without exception the Bid and all prices in the Bid are premised upon performing and furnishing the Work required by the Bidding Documents.

ARTICLE 4 – BIDDER'S CERTIFICATION

4.01 Bidder certifies that:

A. This Bid is genuine and not made in the interest of or on behalf of any undisclosed individual or entity and is not submitted in conformity with any collusive agreement or rules of any group, association, organization, or corporation;

B. Bidder has not directly or indirectly induced or solicited any other Bidder to submit a false or sham Bid;

C. Bidder has not solicited or induced any individual or entity to refrain from bidding; and

D. Bidder has not engaged in corrupt, fraudulent, collusive, or coercive practices in competing for the Contract. For the purposes of this Paragraph 4.01.D:

1. "corrupt practice" means the offering, giving, receiving, or soliciting of any thing of value likely to influence the action of a public official in the bidding process;

2. "fraudulent practice" means an intentional misrepresentation of facts made (a) to influence the bidding process to the detriment of Owner, (b) to establish bid prices at artificial non-competitive levels, or (c) to deprive Owner of the benefits of free and open competition;

3. "collusive practice" means a scheme or arrangement between two or more Bidders, with or without the knowledge of Owner, a purpose of which is to establish bid prices at artificial, non-competitive levels; and

4. "coercive practice" means harming or threatening to harm, directly or indirectly, persons or their property to influence their participation in the bidding process or affect the e execution of the Contract.

ARTICLE 5 – BASIS OF BID

5.01 Bidder will complete the Work in accordance with the Contract Documents for the following price(s):

Item No.	Description	Unit	Estimated Quantity	Bid Unit Price	Bid Price
1	Tennis Court Equipment	Each Court	1	$	$
2	Pickleball Court Equipment	Each Court	2	$	$
3	HMA Surface Removal	Sq. Yd.	1500	$	$
4	Tennis Equipment Removal	Lump Sum	1	$	$
5	Fence Removal	Lin. Ft.	475	$	$
6	HMA 13A Base Course	Ton	90	$	$
7	HMA 36A Wearing Course	Ton	90	$	$
8	Aggregate Surface Course, 6 inch	Sq. Yd.	150	$	$
9	Aggregate Surface Course, 2 inch	Sq. Yd.	1900	$	$
10	Acrylic Sport Surface	Lump Sum	1	$	$
11	Tennis Court Striping	Each Court	1	$	$
12	Pickleball Court Striping	Each Court	2	$	$
13	Fencing, 4 Foot	Lin. Ft.	50	$	$
14	Fencing, 10 Foot	Lin. Ft	500	$	$
15	Fence Strip Footing	Lin. Ft.	550	$	$
16	Trash/ Recycling Receptacle	Each	5	$	$
17	Accessible Bench	Each	4	$	$
18	Landscaping/ Site Restoration	Lump Sum	1	$	$
Total of All Unit Price Bid Items					$

Bidder acknowledges that (1) each Bid Unit Price includes an amount considered by Bidder to be adequate to cover Contractor's overhead and profit for each separately identified item, and (2) estimated quantities are not guaranteed, and are solely for the purpose of comparison of Bids, and final payment for all unit price Bid items will be based on actual quantities, determined as provided in the Contract Documents.

ARTICLE 6 – TIME OF COMPLETION

6.01 Bidder agrees that the Work will be substantially complete on or before XXXXX and will be completed and ready for final payment in accordance with Paragraph 15.06 of the General Conditions on or before XXXXXXX.

6.02 Bidder accepts the provisions of the Agreement as to liquidated damages.

ARTICLE 7 – ATTACHMENTS TO THIS BID

7.01 The following documents are submitted with and made a condition of this Bid:

A. Required Bid security;

B. Affidavit of Compliance – Iran Economic Sanctions Act;

ARTICLE 8 – DEFINED TERMS

8.01 The terms used in this Bid with initial capital letters have the meanings stated in the Instructions to Bidders, the General Conditions, and the Supplementary Conditions.

ARTICLE 9 – BID SUBMITTAL

BIDDER: *[Indicate correct name of bidding entity]*

_____

By:
[Signature] _____

[Printed name] _____
(If Bidder is a corporation, a limited liability company, a partnership, or a joint venture, attach evidence of authority to sign.)

Attest:
[Signature] _____

[Printed name] _____

Title: _____

Submittal Date: _____

Address for giving notices:

_____

_____

_____

Telephone Number: _____

Fax Number: _____

Contact Name and e-mail address: _____

_____

Bidder's License No.: _____
(where applicable)

NOTE TO USER: Use in those states or other jurisdictions where applicable or required.

NOTICE OF AWARD

Date of Issuance:

Owner:	Ypsilanti Charter Township	Owner's Contract No.:	
Engineer:	Spicer Group, Inc.	Engineer's Project No.:	133251SG2022
Project:	Clubview Park Improvements	Contract Name:	Clubview Park Improvements

Bidder:

Bidder's Address:

TO BIDDER:

You are notified that Owner has accepted your Bid dated [_____] for the above Contract, and that you are the Successful Bidder and are awarded a Contract for:

_____ .

[describe Work, alternates, or sections of Work awarded]

The Contract Price of the awarded Contract is: $_____ *[note if subject to unit prices, or cost-plus]*

[ ] unexecuted counterparts of the Agreement accompany this Notice of Award, and one copy of the Contract Documents accompanies this Notice of Award, or has been transmitted or made available to Bidder electronically. *[revise if multiple copies accompany the Notice of Award]*

☐ a set of the Drawings will be delivered separately from the other Contract Documents.

You must comply with the following conditions precedent within 15 days of the date of receipt of this Notice of Award:

1. Deliver to Owner [____]counterparts of the Agreement, fully executed by Bidder.
2. Deliver with the executed Agreement(s) the Contract security *[e.g., performance and payment bonds]* and insurance documentation as specified in the Instructions to Bidders and General Conditions, Articles 2 and 6.
3. Other conditions precedent (if any):

Failure to comply with these conditions within the time specified will entitle Owner to consider you in default, annul this Notice of Award, and declare your Bid security forfeited.

Within ten days after you comply with the above conditions, Owner will return to you one fully executed counterpart of the Agreement, together with any additional copies of the Contract Documents as indicated in Paragraph 2.02 of the General Conditions.

Owner**:**

_____	_____
Authorized Signature	Authorized Signature
By:	By:
Title:	Title:

Copy: Engineer

AGREEMENT

THIS AGREEMENT is by and between _____ ("Owner") and

_____ ("Contractor").

Owner and Contractor hereby agree as follows:

ARTICLE 1 – WORK

1.01 Contractor shall complete all Work as specified or indicated in the Contract Documents. The Work is generally described as follows:

ARTICLE 2 – THE PROJECT

2.01 The Project, of which the Work under the Contract Documents is a part, is generally described as follows: Burns Park Tennis and Pickleball Courts.

ARTICLE 3 – ENGINEER

3.01 The Project has been designed by Spicer Group, Inc.

3.02 The Owner has retained Spicer Group, Inc. ("Engineer") to act as Owner's representative, assume all duties and responsibilities, and have the rights and authority assigned to Engineer in the Contract Documents in connection with the completion of the Work in accordance with the Contract Documents.

ARTICLE 4 – CONTRACT TIMES

4.01 *Time of the Essence*

A. All time limits for Milestones, if any, Substantial Completion, and completion and readiness for final payment as stated in the Contract Documents are of the essence of the Contract.

4.02 *Contract Times: Dates*

A. The Work will be substantially completed on or before XXXXX and completed and ready for final payment in accordance with Paragraph 15.06 of the General Conditions on or before XXXXXX

4.03 *Liquidated Damages*

A. Contractor and Owner recognize that time is of the essence as stated in Paragraph 4.01 above and that Owner will suffer financial and other losses if the Work is not completed and Milestones not achieved within the times specified in Paragraph 4.02 above, plus any extensions thereof allowed in accordance with the Contract. The parties also recognize the delays, expense, and difficulties involved in proving in a legal or arbitration proceeding the actual loss suffered by Owner if the Work is not completed on time. Accordingly, instead of requiring any such proof, Owner and Contractor agree that as liquidated damages for delay (but not as a penalty):

1. Substantial Completion: Contractor shall pay Owner $600 for each day that expires after the time (as duly adjusted pursuant to the Contract) specified in Paragraph 4.02.A above for Substantial Completion until the Work is substantially complete.

2. Completion of Remaining Work: After Substantial Completion, if Contractor shall neglect, refuse, or fail to complete the remaining Work within the Contract Time (as duly adjusted pursuant to the Contract) for completion and readiness for final payment, Contractor shall pay Owner $600 for each day that expires after such time until the Work is completed and ready for final payment.

3. Liquidated damages for failing to timely attain Substantial Completion and final completion are not additive and will not be imposed concurrently.

4.04 *Special Damages*

A. In addition to the amount provided for liquidated damages, Contractor shall reimburse Owner (1) for any fines or penalties imposed on Owner as a direct result of the Contractor's failure to attain Substantial Completion according to the Contract Times, and (2) for the actual costs reasonably incurred by Owner for engineering, construction observation, inspection, and administrative services needed after the time specified in Paragraph 4.02 for Substantial Completion (as duly adjusted pursuant to the Contract), until the Work is substantially complete.

B. After Contractor achieves Substantial Completion, if Contractor shall neglect, refuse, or fail to complete the remaining Work within the Contract Times, Contractor shall reimburse Owner for the actual costs reasonably incurred by Owner for engineering, construction observation, inspection, and administrative services needed after the time specified in Paragraph 4.02 for Work to be completed and ready for final payment (as duly adjusted pursuant to the Contract), until the Work is completed and ready for final payment.

ARTICLE 5 – CONTRACT PRICE

5.01 Owner shall pay Contractor for completion of the Work in accordance with the Contract Documents the amounts that follow, subject to adjustment under the Contract:

A. For all Unit Price Work, an amount equal to the sum of the extended prices (established for each separately identified item of Unit Price Work by multiplying the unit price times the actual quantity of that item):

Item No.	Description	Unit	Estimated Quantity	Bid Unit Price	Bid Price
1.	Tennis Court Equipment	Each	1	$	$
2.	Pickleball Court Equipment	Each	2	$	$
3.	HMA Surface Removal	Sq Yd	1,500	$	$
4.	Tennis Equipment Removal	Lump Sum	1	$	$
5.	Fence Removal	Lin Ft	475	$	$
6.	HMA 13A Base Course	Ton	90	$	$
7.	HMA 36A Wearing Course	Ton	90	$	$
8.	Aggregate Surface Course, 6 inch	Sq Yd	150	$	$
9.	Aggregate Surface Course, 2 inch	Sq Yd	1,900	$	$
10.	Acrylic Sport Surface	Lump Sum	1	$	$
11.	Tennis Court Striping	Each	1	$	$
12.	Pickleball Court Striping	Each	2	$	$
13.	Fencing, 4 Foot	Lin Ft	50	$	$
14.	Fencing, 10 Foot	Lin Ft	500	$	$
15.	Fence Strip Footing	Lin Ft	550	$	$
16.	Trash Receptacle	Each	5	$	$
17.	Accessible Bench	Each	4	$	$
18.	Landscaping/ Site Restoration	Lump Sum	1	$	$
Total of all Extended Prices for Unit Price Work (subject to final adjustment based on actual quantities)					$

The extended prices for Unit Price Work set forth as of the Effective Date of the Contract are based on estimated quantities. As provided in Paragraph 13.03 of the General Conditions, estimated quantities are not guaranteed, and determinations of actual quantities and classifications are to be made by Engineer.

B. For all Work, at the prices stated in Contractor's Bid, attached hereto as an exhibit.

ARTICLE 6 – PAYMENT PROCEDURES

6.01 *Submittal and Processing of Payments*

A. Contractor shall submit Applications for Payment in accordance with Article 15 of the General Conditions. Applications for Payment will be processed by Engineer as provided in the General Conditions.

6.02 *Progress Payments; Retainage*

A. Owner shall make progress payments on account of the Contract Price on the basis of Contractor's Applications for Payment on or about the 1st day of each month during performance of the Work as provided in Paragraph 6.02.A.1 below, provided that such Applications for Payment have been submitted in a timely manner and otherwise meet the requirements of the Contract. All such payments will be measured by the Schedule of Values established as provided in the General Conditions (and in the case of Unit Price Work based

on the number of units completed) or, in the event there is no Schedule of Values, as provided elsewhere in the Contract.

1. Prior to Substantial Completion, progress payments will be made in an amount equal to the percentage indicated below but, in each case, less the aggregate of payments previously made and less such amounts as Owner may withhold, including but not limited to liquidated damages, in accordance with the Contract

    a. 90 percent of Work completed (with the balance being retainage). If the Work has been 50 percent completed as determined by Engineer, and if the character and progress of the Work have been satisfactory to Owner and Engineer, then as long as the character and progress of the Work remain satisfactory to Owner and Engineer, there will be no additional retainage; and

B. Upon Substantial Completion, Owner shall pay an amount sufficient to increase total payments to Contractor to 95 percent of the Work completed, less such amounts set off by Owner pursuant to Paragraph 15.01.E of the General Conditions, and less 50 percent of Engineer's estimate of the value of Work to be completed or corrected as shown on the punch list of items to be completed or corrected prior to final payment.

6.03 *Final Payment*

A. Upon final completion and acceptance of the Work in accordance with Paragraph 15.06 of the General Conditions, Owner shall pay the remainder of the Contract Price as recommended by Engineer as provided in said Paragraph 15.06.

ARTICLE 7 – INTEREST

7.01 All amounts not paid when due shall bear interest at the rate of *0* percent per annum.

ARTICLE 8 – CONTRACTOR'S REPRESENTATIONS

8.01 In order to induce Owner to enter into this Contract, Contractor makes the following representations:

A. Contractor has examined and carefully studied the Contract Documents, and any data and reference items identified in the Contract Documents.

B. Contractor has visited the Site, conducted a thorough, alert visual examination of the Site and adjacent areas, and become familiar with and is satisfied as to the general, local, and Site conditions that may affect cost, progress, and performance of the Work.

C. Contractor is familiar with and is satisfied as to all Laws and Regulations that may affect cost, progress, and performance of the Work.

D. Contractor has carefully studied all: (1) reports of explorations and tests of subsurface conditions at or adjacent to the Site and all drawings of physical conditions relating to existing surface or subsurface structures at the Site that have been identified in the Supplementary Conditions, especially with respect to Technical Data in such reports and drawings, and (2) reports and drawings relating to Hazardous Environmental Conditions, if any, at or adjacent to the Site that have been identified in the Supplementary Conditions, especially with respect to Technical Data in such reports and drawings.

E. Contractor has considered the information known to Contractor itself; information commonly known to contractors doing business in the locality of the Site; information and observations obtained from visits to the Site; the Contract Documents; and the Site-related reports and drawings identified in the Contract Documents, with respect to the effect of such information, observations, and documents on (1) the cost, progress, and performance of the

Work; (2) the means, methods, techniques, sequences, and procedures of construction to be employed by Contractor; and (3) Contractor's safety precautions and programs.

F. Based on the information and observations referred to in the preceding paragraph, Contractor agrees that no further examinations, investigations, explorations, tests, studies, or data are necessary for the performance of the Work at the Contract Price, within the Contract Times, and in accordance with the other terms and conditions of the Contract.

G. Contractor is aware of the general nature of work to be performed by Owner and others at the Site that relates to the Work as indicated in the Contract Documents.

H. Contractor has given Engineer written notice of all conflicts, errors, ambiguities, or discrepancies that Contractor has discovered in the Contract Documents, and the written resolution thereof by Engineer is acceptable to Contractor.

I. The Contract Documents are generally sufficient to indicate and convey understanding of all terms and conditions for performance and furnishing of the Work.

J. Contractor's entry into this Contract constitutes an incontrovertible representation by Contractor that without exception all prices in the Agreement are premised upon performing and furnishing the Work required by the Contract Documents.

ARTICLE 9 – CONTRACT DOCUMENTS

9.01 *Contents*

A. The Contract Documents consist of the following:

1. This Agreement (pages 1 to 7, inclusive).
2. Performance bond (pages 1 to 3, inclusive).
3. Payment bond (pages 1 to 4, inclusive).
4. General Conditions (pages 1 to 65, inclusive).
5. Supplementary Conditions (pages 1 to 5, inclusive).
6. Specifications as listed in the table of contents of the Project Manual.
7. The Drawings are listed on the document title page.
8. Addenda (numbers ___ to ___, inclusive).
9. Exhibits to this Agreement (enumerated as follows):
    a. Contractor's Bid (pages ___ to ___, inclusive).
10. The following which may be delivered or issued on or after the Effective Date of the Contract and are not attached hereto:
    a. Notice to Proceed.
    b. Work Change Directives.
    c. Change Orders.
    d. Field Orders.

B. The documents listed in Paragraph 9.01.A are attached to this Agreement (except as expressly noted otherwise above).

C. There are no Contract Documents other than those listed above in this Article 9.

D. The Contract Documents may only be amended, modified, or supplemented as provided in the General Conditions.

ARTICLE 10 – MISCELLANEOUS

10.01 *Terms*

A. Terms used in this Agreement will have the meanings stated in the General Conditions and the Supplementary Conditions.

10.02 *Assignment of Contract*

A. Unless expressly agreed to elsewhere in the Contract, no assignment by a party hereto of any rights under or interests in the Contract will be binding on another party hereto without the written consent of the party sought to be bound; and, specifically but without limitation, money that may become due and money that is due may not be assigned without such consent (except to the extent that the effect of this restriction may be limited by law), and unless specifically stated to the contrary in any written consent to an assignment, no assignment will release or discharge the assignor from any duty or responsibility under the Contract Documents.

10.03 *Successors and Assigns*

A. Owner and Contractor each binds itself, its successors, assigns, and legal representatives to the other party hereto, its successors, assigns, and legal representatives in respect to all covenants, agreements, and obligations contained in the Contract Documents.

10.04 *Severability*

A. Any provision or part of the Contract Documents held to be void or unenforceable under any Law or Regulation shall be deemed stricken, and all remaining provisions shall continue to be valid and binding upon Owner and Contractor, who agree that the Contract Documents shall be reformed to replace such stricken provision or part thereof with a valid and enforceable provision that comes as close as possible to expressing the intention of the stricken provision.

10.05 *Contractor's Certifications*

A. Contractor certifies that it has not engaged in corrupt, fraudulent, collusive, or coercive practices in competing for or in executing the Contract. For the purposes of this Paragraph 10.05:

1. "corrupt practice" means the offering, giving, receiving, or soliciting of any thing of value likely to influence the action of a public official in the bidding process or in the Contract execution;

2. "fraudulent practice" means an intentional misrepresentation of facts made (a) to influence the bidding process or the execution of the Contract to the detriment of Owner, (b) to establish Bid or Contract prices at artificial non-competitive levels, or (c) to deprive Owner of the benefits of free and open competition;

3. "collusive practice" means a scheme or arrangement between two or more Bidders, with or without the knowledge of Owner, a purpose of which is to establish Bid prices at artificial, non-competitive levels; and

4. "coercive practice" means harming or threatening to harm, directly or indirectly, persons or their property to influence their participation in the bidding process or affect the execution of the Contract.

10.06 *Other Provisions*

A. Owner stipulates that if the General Conditions that are made a part of this Contract are based on EJCDC® C-700, Standard General Conditions for the Construction Contract, published by the Engineers Joint Contract Documents Committee®, and if Owner is the

party that has furnished said General Conditions, then Owner has plainly shown all modifications to the standard wording of such published document to the Contractor, through a process such as highlighting or "track changes" (redline/strikeout), or in the Supplementary Conditions.

B. Equal Opportunity

Contractor shall not discriminate against an employee or applicant for employment with respect to hire, tenure, terms, conditions, or privileges of employment, or a matter directly or indirectly related to employment, because of race, color, religion, national origin, age, sex, height, weight, marital status, or because of a handicap that is unrelated to the person's ability to perform the duties of a particular job or position.

IN WITNESS WHEREOF, Owner and Contractor have signed this Agreement.

This Agreement will be effective on _____ (which is the Effective Date of the Contract).

OWNER:	CONTRACTOR:
_____	_____
By: _____	By: _____
Title: _____	Title: _____
Attest: _____	Attest: _____
Title: _____	Title: _____
Address for giving notices:	Address for giving notices:
_____	_____
_____	_____
_____	_____

NOTICE TO PROCEED

Owner:	Ypsilanti Charter Township	Owner's Contract No.:	
Contractor:		Contractor's Project No.:	
Engineer:	Spicer Group, Inc.	Engineer's Project No.:	133251SG2022
Project:	Clubview Park Improvements	Contract Name:	Clubview Park Improvements
		Effective Date of Contract:	

TO CONTRACTOR:

Owner hereby notifies Contractor that the Contract Times under the above Contract will commence to run on _____ __, **2023**. *[see Paragraph 4.01 of the General Conditions]*

On that date, Contractor shall start performing its obligations under the Contract Documents. No Work shall be done at the Site prior to such date. In accordance with the Agreement, the date of Substantial Completion is _____ __, **2023**, and the date of readiness for final payment is _____ __, **2023**.

Before starting any Work at the Site, Contractor must comply with the following:
[Note any access limitations, security procedures, or other restrictions]

Owner**:**

	_____		_____
	Authorized Signature		Authorized Signature
By:		By:	
	_____		_____
Title:	_____	Title:	_____
Date Issued:	_____	Date Issued:	_____

Copy: Engineer

PERFORMANCE BOND

CONTRACTOR *(name and address)*:

SURETY *(name and address of principal place of business)*:

OWNER *(name and address)*:
Ypsilanti Charter Township
7200 S Huron River Dr
Ypsilanti, MI 48197

CONSTRUCTION CONTRACT
Effective Date of the Agreement:
Amount:
Description *(name and location)*:

BOND
Bond Number:
Date *(not earlier than the Effective Date of the Agreement of the Construction Contract)*:
Amount:
Modifications to this Bond Form: ☐ None ☐ See Paragraph 16

Surety and Contractor, intending to be legally bound hereby, subject to the terms set forth below, do each cause this Performance Bond to be duly executed by an authorized officer, agent, or representative.

CONTRACTOR AS PRINCIPAL

_____ *(seal)*
Contractor's Name and Corporate Seal

By: _____
Signature

_____
Print Name

_____
Title

Attest:_____
_____
Signature

_____
Title

SURETY

_____ *(seal)*
Surety's Name and Corporate Seal

By:_____
Signature *(attach power of attorney)*

_____
Print Name

_____
Title

Attest:_____

Signature

_____
Title

Notes: (1) Provide supplemental execution by any additional parties, such as joint venturers. (2) Any singular reference to Contractor, Surety, Owner, or other party shall be considered plural where applicable.

1. The Contractor and Surety, jointly and severally, bind themselves, their heirs, executors, administrators, successors, and assigns to the Owner for the performance of the Construction Contract, which is incorporated herein by reference.

2. If the Contractor performs the Construction Contract, the Surety and the Contractor shall have no obligation under this Bond, except when applicable to participate in a conference as provided in Paragraph 3.

3. If there is no Owner Default under the Construction Contract, the Surety's obligation under this Bond shall arise after:

3.1 The Owner first provides notice to the Contractor and the Surety that the Owner is considering declaring a Contractor Default. Such notice shall indicate whether the Owner is requesting a conference among the Owner, Contractor, and Surety to discuss the Contractor's performance. If the Owner does not request a conference, the Surety may, within five (5) business days after receipt of the Owner's notice, request such a conference. If the Surety timely requests a conference, the Owner shall attend. Unless the Owner agrees otherwise, any conference requested under this Paragraph 3.1 shall be held within ten (10) business days of the Surety's receipt of the Owner's notice. If the Owner, the Contractor, and the Surety agree, the Contractor shall be allowed a reasonable time to perform the Construction Contract, but such an agreement shall not waive the Owner's right, if any, subsequently to declare a Contractor Default;

3.2 The Owner declares a Contractor Default, terminates the Construction Contract and notifies the Surety; and

3.3 The Owner has agreed to pay the Balance of the Contract Price in accordance with the terms of the Construction Contract to the Surety or to a contractor selected to perform the Construction Contract.

4. Failure on the part of the Owner to comply with the notice requirement in Paragraph 3.1 shall not constitute a failure to comply with a condition precedent to the Surety's obligations, or release the Surety from its obligations, except to the extent the Surety demonstrates actual prejudice.

5. When the Owner has satisfied the conditions of Paragraph 3, the Surety shall promptly and at the Surety's expense take one of the following actions:

5.1 Arrange for the Contractor, with the consent of the Owner, to perform and complete the Construction Contract;

5.2 Undertake to perform and complete the Construction Contract itself, through its agents or independent contractors;

5.3 Obtain bids or negotiated proposals from qualified contractors acceptable to the Owner for a contract for performance and completion of the Construction Contract, arrange for a contract to be prepared for execution by the Owner and a contractor selected with the Owners concurrence, to be secured with performance and payment bonds executed by a qualified surety equivalent to the bonds issued on the Construction Contract, and pay to the Owner the amount of damages as described in Paragraph 7 in excess of the Balance of the Contract Price incurred by the Owner as a result of the Contractor Default; or

5.4 Waive its right to perform and complete, arrange for completion, or obtain a new contractor, and with reasonable promptness under the circumstances:

5.4.1 After investigation, determine the amount for which it may be liable to the Owner and, as soon as practicable after the amount is determined, make payment to the Owner; or

5.4.2 Deny liability in whole or in part and notify the Owner, citing the reasons for denial.

6. If the Surety does not proceed as provided in Paragraph 5 with reasonable promptness, the Surety shall be deemed to be in default on this Bond seven days after receipt of an additional written notice from the Owner to the Surety demanding that the Surety perform its obligations under this Bond, and the Owner shall be entitled to enforce any remedy available to the Owner. If the Surety proceeds as provided in Paragraph 5.4, and the Owner refuses the payment or the Surety has denied liability, in whole or in part, without further notice the Owner shall be entitled to enforce any remedy available to the Owner.

7. If the Surety elects to act under Paragraph 5.1, 5.2, or 5.3, then the responsibilities of the Surety to the Owner shall not be greater than those of the Contractor under the Construction Contract, and the responsibilities of the Owner to the Surety shall not be greater than those of the Owner under the Construction Contract. Subject to the commitment by the Owner to pay the Balance of the Contract Price, the Surety is obligated, without duplication for:

7.1 the responsibilities of the Contractor for correction of defective work and completion of the Construction Contract;

7.2 additional legal, design professional, and delay costs resulting from the Contractor's Default, and resulting from the actions or failure to act of the Surety under Paragraph 5; and

7.3 liquidated damages, or if no liquidated damages are specified in the Construction Contract, actual damages caused by delayed performance or non-performance of the Contractor.

8. If the Surety elects to act under Paragraph 5.1, 5.3, or 5.4, the Surety's liability is limited to the amount of this Bond.

9. The Surety shall not be liable to the Owner or others for obligations of the Contractor that are unrelated to the Construction Contract, and the Balance of the Contract Price shall not be reduced or set off on account of any such unrelated obligations. No right of action shall accrue on this Bond to any person or entity other than the Owner or its heirs, executors, administrators, successors, and assigns.

10. The Surety hereby waives notice of any change, including changes of time, to the Construction Contract or to related subcontracts, purchase orders, and other obligations.

11. Any proceeding, legal or equitable, under this Bond may be instituted in any court of competent jurisdiction in the location in which the work or part of the work is located and shall be instituted within two years after a declaration of Contractor Default or within two years after the Contractor ceased working or within two years after the Surety refuses or fails to perform its obligations under this Bond, whichever occurs first. If the provisions of this paragraph are void or prohibited by law, the minimum periods of limitations available to sureties as a defense in the jurisdiction of the suit shall be applicable.

12. Notice to the Surety, the Owner, or the Contractor shall be mailed or delivered to the address shown on the page on which their signature appears.

13. When this Bond has been furnished to comply with a statutory or other legal requirement in the location where the construction was to be performed, any provision in this Bond conflicting with said statutory or legal requirement shall be deemed deleted herefrom and provisions conforming to such statutory or other legal requirement shall be deemed incorporated herein. When so furnished, the intent is that this Bond shall be construed as a statutory bond and not as a common law bond.

14. Definitions

14.1 Balance of the Contract Price: The total amount payable by the Owner to the Contractor under the Construction Contract after all proper adjustments have been made including allowance for the Contractor for any amounts received or to be received by the Owner in settlement of insurance or other claims for damages to which the Contractor is entitled, reduced by all valid and proper payments made to or on behalf of the Contractor under the Construction Contract.

14.2 Construction Contract: The agreement between the Owner and Contractor identified on the cover page, including all Contract Documents and changes made to the agreement and the Contract Documents.

14.3 Contractor Default: Failure of the Contractor, which has not been remedied or waived, to perform or otherwise to comply with a material term of the Construction Contract.

14.4 Owner Default: Failure of the Owner, which has not been remedied or waived, to pay the Contractor as required under the Construction Contract or to perform and complete or comply with the other material terms of the Construction Contract.

14.5 Contract Documents: All the documents that comprise the agreement between the Owner and Contractor.

15. If this Bond is issued for an agreement between a contractor and subcontractor, the term Contractor in this Bond shall be deemed to be Subcontractor and the term Owner shall be deemed to be Contractor.

16. Modifications to this Bond are as follows:

PAYMENT BOND

CONTRACTOR *(name and address)*:

SURETY *(name and address of principal place of business)*:

OWNER *(name and address)*:
Ypsilanti Charter Township
7200 S Huron River Dr
Ypsilanti, MI 48197

CONSTRUCTION CONTRACT
Effective Date of the Agreement:
Amount:
Description *(name and location)*:

BOND
Bond Number:
Date *(not earlier than the Effective Date of the Agreement of the Construction Contract)*:
Amount:
Modifications to this Bond Form: ☐ None ☐ See Paragraph 18

Surety and Contractor, intending to be legally bound hereby, subject to the terms set forth below, do each cause this Payment Bond to be duly executed by an authorized officer, agent, or representative.

CONTRACTOR AS PRINCIPAL	**SURETY**
_____ *(seal)*	_____ *(seal)*
Contractor's Name and Corporate Seal	Surety's Name and Corporate Seal
By: _____	**By:** _____
Signature	Signature *(attach power of attorney)*
_____	_____
Print Name	Print Name
_____	_____
Title	Title
Attest: _____	**Attest:** _____
Signature	Signature
_____	_____
Title	Title

Notes: (1) Provide supplemental execution by any additional parties, such as joint venturers. (2) Any singular reference to Contractor, Surety, Owner, or other party shall be considered plural where applicable.

1. The Contractor and Surety, jointly and severally, bind themselves, their heirs, executors, administrators, successors, and assigns to the Owner to pay for labor, materials, and equipment furnished for use in the performance of the Construction Contract, which is incorporated herein by reference, subject to the following terms.

2. If the Contractor promptly makes payment of all sums due to Claimants, and defends, indemnifies, and holds harmless the Owner from claims, demands, liens, or suits by any person or entity seeking payment for labor, materials, or equipment furnished for use in the performance of the Construction Contract, then the Surety and the Contractor shall have no obligation under this Bond.

3. If there is no Owner Default under the Construction Contract, the Surety's obligation to the Owner under this Bond shall arise after the Owner has promptly notified the Contractor and the Surety (at the address described in Paragraph 13) of claims, demands, liens, or suits against the Owner or the Owner's property by any person or entity seeking payment for labor, materials, or equipment furnished for use in the performance of the Construction Contract, and tendered defense of such claims, demands, liens, or suits to the Contractor and the Surety.

4. When the Owner has satisfied the conditions in Paragraph 3, the Surety shall promptly and at the Surety's expense defend, indemnify, and hold harmless the Owner against a duly tendered claim, demand, lien, or suit.

5. The Surety's obligations to a Claimant under this Bond shall arise after the following:

   5.1 Claimants who do not have a direct contract with the Contractor,

      5.1.1 have furnished a written notice of non-payment to the Contractor, stating with substantial accuracy the amount claimed and the name of the party to whom the materials were, or equipment was, furnished or supplied or for whom the labor was done or performed, within ninety (90) days after having last performed labor or last furnished materials or equipment included in the Claim; and

      5.1.2 have sent a Claim to the Surety (at the address described in Paragraph 13).

   5.2 Claimants who are employed by or have a direct contract with the Contractor have sent a Claim to the Surety (at the address described in Paragraph 13).

6. If a notice of non-payment required by Paragraph 5.1.1 is given by the Owner to the Contractor, that is sufficient to satisfy a Claimant's obligation to furnish a written notice of non-payment under Paragraph 5.1.1.

7. When a Claimant has satisfied the conditions of Paragraph 5.1 or 5.2, whichever is applicable, the Surety shall promptly and at the Surety's expense take the following actions:

   7.1 Send an answer to the Claimant, with a copy to the Owner, within sixty (60) days after receipt of the Claim, stating the amounts that are undisputed and the basis for challenging any amounts that are disputed; and

   7.2 Pay or arrange for payment of any undisputed amounts.

   7.3 The Surety's failure to discharge its obligations under Paragraph 7.1 or 7.2 shall not be deemed to constitute a waiver of defenses the Surety or Contractor may have or acquire as to a Claim, except as to undisputed amounts for which the Surety and Claimant have reached agreement. If, however, the Surety fails to discharge its obligations under Paragraph 7.1 or 7.2, the Surety shall indemnify the Claimant for the reasonable attorney's fees the Claimant incurs thereafter to recover any sums found to be due and owing to the Claimant.

8. The Surety's total obligation shall not exceed the amount of this Bond, plus the amount of reasonable attorney's fees provided under Paragraph 7.3, and the amount of this Bond shall be credited for any payments made in good faith by the Surety.

9. Amounts owed by the Owner to the Contractor under the Construction Contract shall be used for the performance of the Construction Contract and to satisfy claims, if any, under any construction performance bond. By the Contractor furnishing and the Owner accepting this Bond, they agree that all funds earned by the Contractor in the performance of the Construction Contract are dedicated to satisfy obligations of the Contractor and Surety under this Bond, subject to the Owner's priority to use the funds for the completion of the work.

10. The Surety shall not be liable to the Owner, Claimants, or others for obligations of the Contractor that are unrelated to the Construction Contract. The Owner shall not be liable for the payment of any costs or expenses of any Claimant under this Bond,

and shall have under this Bond no obligation to make payments to or give notice on behalf of Claimants, or otherwise have any obligations to Claimants under this Bond.

11. The Surety hereby waives notice of any change, including changes of time, to the Construction Contract or to related subcontracts, purchase orders, and other obligations.

12. No suit or action shall be commenced by a Claimant under this Bond other than in a court of competent jurisdiction in the state in which the project that is the subject of the Construction Contract is located or after the expiration of one year from the date (1) on which the Claimant sent a Claim to the Surety pursuant to Paragraph 5.1.2 or 5.2, or (2) on which the last labor or service was performed by anyone or the last materials or equipment were furnished by anyone under the Construction Contract, whichever of (1) or (2) first occurs. If the provisions of this paragraph are void or prohibited by law, the minimum period of limitation available to sureties as a defense in the jurisdiction of the suit shall be applicable.

13. Notice and Claims to the Surety, the Owner, or the Contractor shall be mailed or delivered to the address shown on the page on which their signature appears. Actual receipt of notice or Claims, however accomplished, shall be sufficient compliance as of the date received.

14. When this Bond has been furnished to comply with a statutory or other legal requirement in the location where the construction was to be performed, any provision in this Bond conflicting with said statutory or legal requirement shall be deemed deleted herefrom and provisions conforming to such statutory or other legal requirement shall be deemed incorporated herein. When so furnished, the intent is that this Bond shall be construed as a statutory bond and not as a common law bond.

15. Upon requests by any person or entity appearing to be a potential beneficiary of this Bond, the Contractor and Owner shall promptly furnish a copy of this Bond or shall permit a copy to be made.

16. **Definitions**

16.1 **Claim:** A written statement by the Claimant including at a minimum:

1. The name of the Claimant;
2. The name of the person for whom the labor was done, or materials or equipment furnished;
3. A copy of the agreement or purchase order pursuant to which labor, materials, or equipment was furnished for use in the performance of the Construction Contract;
4. A brief description of the labor, materials, or equipment furnished;
5. The date on which the Claimant last performed labor or last furnished materials or equipment for use in the performance of the Construction Contract;
6. The total amount earned by the Claimant for labor, materials, or equipment furnished as of the date of the Claim;
7. The total amount of previous payments received by the Claimant; and
8. The total amount due and unpaid to the Claimant for labor, materials, or equipment furnished as of the date of the Claim.

16.2 **Claimant:** An individual or entity having a direct contract with the Contractor or with a subcontractor of the Contractor to furnish labor, materials, or equipment for use in the performance of the Construction Contract. The term Claimant also includes any individual or entity that has rightfully asserted a claim under an applicable mechanic's lien or similar statute against the real property upon which the Project is located. The intent of this Bond shall be to include without limitation in the terms of "labor, materials, or equipment" that part of the water, gas, power, light, heat, oil, gasoline, telephone service, or rental equipment used in the Construction Contract, architectural and engineering services required for performance of the work of the Contractor and the Contractor's subcontractors, and all other items for which a mechanic's lien may be asserted in the jurisdiction where the labor, materials, or equipment were furnished.

16.3 **Construction Contract:** The agreement between the Owner and Contractor identified on the cover page, including all Contract Documents and all changes made to the agreement and the Contract Documents.

16.4 **Owner Default**: Failure of the Owner, which has not been remedied or waived, to pay the Contractor as required under the Construction Contract or to perform and complete or comply with the other material terms of the Construction Contract.

16.5 **Contract Documents:** All the documents that comprise the agreement between the Owner and Contractor.

17. If this Bond is issued for an agreement between a contractor and subcontractor, the term Contractor in

this Bond shall be deemed to be Subcontractor and the term Owner shall be deemed to be Contractor.

18. Modifications to this Bond are as follows:

CERTIFICATE OF SUBSTANTIAL COMPLETION

Owner:	Ypsilanti Charter Township	Owner's Contract No.:	
Contractor:		Contractor's Project No.:	
Engineer:	Spicer Group, Inc.	Engineer's Project No.:	133251SG2022
Project:	Clubview Park Improvements	Contract Name:	

This [preliminary] [final] Certificate of Substantial Completion applies to:

☐ All Work ☐ The following specified portions of the Work:

Date of Substantial Completion

The Work to which this Certificate applies has been inspected by authorized representatives of Owner, Contractor, and Engineer, and found to be substantially complete. The Date of Substantial Completion of the Work or portion thereof designated above is hereby established, subject to the provisions of the Contract pertaining to Substantial Completion. The date of Substantial Completion in the final Certificate of Substantial Completion marks the commencement of the contractual correction period and applicable warranties required by the Contract.

A punch list of items to be completed or corrected is attached to this Certificate. This list may not be all-inclusive, and the failure to include any items on such list does not alter the responsibility of the Contractor to complete all Work in accordance with the Contract.

The responsibilities between Owner and Contractor for security, operation, safety, maintenance, heat, utilities, insurance, and warranties upon Owner's use or occupancy of the Work shall be as provided in the Contract, except as amended as follows: *[Note: Amendments of contractual responsibilities recorded in this Certificate should be the product of mutual agreement of Owner and Contractor; see Paragraph 15.03.D of the General Conditions.]*

Amendments to Owner's responsibilities:
☐ None
☐ As follows

Amendments to Contractor's responsibilities:
☐ None
☐ As follows:

The following documents are attached to and made a part of this Certificate: *[punch list; others]*

This Certificate does not constitute an acceptance of Work not in accordance with the Contract Documents, nor is it a release of Contractor's obligation to complete the Work in accordance with the Contract.

EXECUTED BY ENGINEER:	RECEIVED:	RECEIVED:
By: _____ (Authorized signature)	By: _____ Owner (Authorized Signature)	By: _____ Contractor (Authorized Signature)
Title: _____	Title: _____	Title: _____
Date: _____	Date: _____	Date: _____

STANDARD GENERAL CONDITIONS OF THE CONSTRUCTION CONTRACT

TABLE OF CONTENTS

Page

Article 1 – Definitions and Terminology 5

1.01 Defined Terms 5

1.02 Terminology 8

Article 2 – Preliminary Matters 9

2.01 Delivery of Bonds and Evidence of Insurance 9

2.02 Copies of Documents 10

2.03 Before Starting Construction 10

2.04 Preconstruction Conference; Designation of Authorized Representatives 10

2.05 Initial Acceptance of Schedules 10

2.06 Electronic Transmittals 11

Article 3 – Documents: Intent, Requirements, Reuse 11

3.01 Intent 11

3.02 Reference Standards 11

3.03 Reporting and Resolving Discrepancies 12

3.04 Requirements of the Contract Documents 13

3.05 Reuse of Documents 13

Article 4 – Commencement and Progress of the Work 13

4.01 Commencement of Contract Times; Notice to Proceed 13

4.02 Starting the Work 13

4.03 Reference Points 14

4.04 Progress Schedule 14

4.05 Delays in Contractor's Progress 14

Article 5 – Availability of Lands; Subsurface and Physical Conditions; Hazardous Environmental Conditions 15

5.01 Availability of Lands 15

5.02 Use of Site and Other Areas 15

5.03 Subsurface and Physical Conditions 16

5.04 Differing Subsurface or Physical Conditions 17

5.05 Underground Facilities 18

5.06 Hazardous Environmental Conditions at Site 19

Article 6 – Bonds and Insurance 21

6.01 Performance, Payment, and Other Bonds 21

6.02 Insurance—General Provisions 22
6.03 Contractor's Insurance 23
6.04 Owner's Liability Insurance 25
6.05 Property Insurance 25
6.06 Waiver of Rights 27
6.07 Receipt and Application of Property Insurance Proceeds 28
Article 7 – Contractor's Responsibilities 28
7.01 Supervision and Superintendence 28
7.02 Labor; Working Hours 28
7.03 Services, Materials, and Equipment 28
7.04 "Or Equals" 29
7.05 Substitutes 30
7.06 Concerning Subcontractors, Suppliers, and Others 31
7.07 Patent Fees and Royalties 32
7.08 Permits 33
7.09 Taxes 33
7.10 Laws and Regulations 33
7.11 Record Documents 34
7.12 Safety and Protection 34
7.13 Safety Representative 35
7.14 Hazard Communication Programs 35
7.15 Emergencies 35
7.16 Shop Drawings, Samples, and Other Submittals 35
7.17 Contractor's General Warranty and Guarantee 37
7.18 Indemnification 38
7.19 Delegation of Professional Design Services 38
Article 8 – Other Work at the Site 39
8.01 Other Work 39
8.02 Coordination 40
8.03 Legal Relationships 40
Article 9 – Owner's Responsibilities 41
9.01 Communications to Contractor 41
9.02 Replacement of Engineer 41
9.03 Furnish Data 41
9.04 Pay When Due 41
9.05 Lands and Easements; Reports, Tests, and Drawings 41

9.06 Insurance 41
9.07 Change Orders 41
9.08 Inspections, Tests, and Approvals 41
9.09 Limitations on Owner's Responsibilities 42
9.10 Undisclosed Hazardous Environmental Condition 42
9.11 Evidence of Financial Arrangements 42
9.12 Safety Programs 42
Article 10 – Engineer's Status During Construction 42
10.01 Owner's Representative 42
10.02 Visits to Site 42
10.03 Project Representative 42
10.04 Rejecting Defective Work 43
10.05 Shop Drawings, Change Orders and Payments 43
10.06 Determinations for Unit Price Work 43
10.07 Decisions on Requirements of Contract Documents and Acceptability of Work 43
10.08 Limitations on Engineer's Authority and Responsibilities 43
10.09 Compliance with Safety Program 44
Article 11 – Amending the Contract Documents; Changes in the Work 44
11.01 Amending and Supplementing Contract Documents 44
11.02 Owner-Authorized Changes in the Work 44
11.03 Unauthorized Changes in the Work 45
11.04 Change of Contract Price 45
11.05 Change of Contract Times 46
11.06 Change Proposals 46
11.07 Execution of Change Orders 47
11.08 Notification to Surety 47
Article 12 – Claims 47
12.01 Claims 47
Article 13 – Cost of the Work; Allowances; Unit Price Work 48
13.01 Cost of the Work 48
13.02 Allowances 51
13.03 Unit Price Work 51
Article 14 – Tests and Inspections; Correction, Removal or Acceptance of Defective Work 52
14.01 Access to Work 52
14.02 Tests, Inspections, and Approvals 52
14.03 Defective Work 53

14.04 Acceptance of Defective Work 53
14.05 Uncovering Work 54
14.06 Owner May Stop the Work 54
14.07 Owner May Correct Defective Work 54
Article 15 – Payments to Contractor; Set-Offs; Completion; Correction Period 55
15.01 Progress Payments 55
15.02 Contractor's Warranty of Title 58
15.03 Substantial Completion 58
15.04 Partial Use or Occupancy 58
15.05 Final Inspection 59
15.06 Final Payment 59
15.07 Waiver of Claims 60
15.08 Correction Period 61
Article 16 – Suspension of Work and Termination 61
16.01 Owner May Suspend Work 61
16.02 Owner May Terminate for Cause 62
16.03 Owner May Terminate For Convenience 63
16.04 Contractor May Stop Work or Terminate 63
Article 17 – Final Resolution of Disputes 63
17.01 Methods and Procedures 63
Article 18 – Miscellaneous 64
18.01 Giving Notice 64
18.02 Computation of Times 64
18.03 Cumulative Remedies 64
18.04 Limitation of Damages 64
18.05 No Waiver 64
18.06 Survival of Obligations 64
18.07 Controlling Law 64
18.08 Headings 65

ARTICLE 1 – DEFINITIONS AND TERMINOLOGY

1.01 *Defined Terms*

A. Wherever used in the Bidding Requirements or Contract Documents, a term printed with initial capital letters, including the term's singular and plural forms, will have the meaning indicated in the definitions below. In addition to terms specifically defined, terms with initial capital letters in the Contract Documents include references to identified articles and paragraphs, and the titles of other documents or forms.

1. *Addenda*—Written or graphic instruments issued prior to the opening of Bids which clarify, correct, or change the Bidding Requirements or the proposed Contract Documents.

2. *Agreement*—The written instrument, executed by Owner and Contractor, that sets forth the Contract Price and Contract Times, identifies the parties and the Engineer, and designates the specific items that are Contract Documents.

3. *Application for Payment*—The form acceptable to Engineer which is to be used by Contractor during the course of the Work in requesting progress or final payments and which is to be accompanied by such supporting documentation as is required by the Contract Documents.

4. *Bid*—The offer of a Bidder submitted on the prescribed form setting forth the prices for the Work to be performed.

5. *Bidder*—An individual or entity that submits a Bid to Owner.

6. *Bidding Documents*—The Bidding Requirements, the proposed Contract Documents, and all Addenda.

7. *Bidding Requirements*—The advertisement or invitation to bid, Instructions to Bidders, Bid Bond or other Bid security, if any, the Bid Form, and the Bid with any attachments.

8. *Change Order*—A document which is signed by Contractor and Owner and authorizes an addition, deletion, or revision in the Work or an adjustment in the Contract Price or the Contract Times, or other revision to the Contract, issued on or after the Effective Date of the Contract.

9. *Change Proposal*—A written request by Contractor, duly submitted in compliance with the procedural requirements set forth herein, seeking an adjustment in Contract Price or Contract Times, or both; contesting an initial decision by Engineer concerning the requirements of the Contract Documents or the acceptability of Work under the Contract Documents; challenging a set-off against payments due; or seeking other relief with respect to the terms of the Contract.

10. *Claim*—(a) A demand or assertion by Owner directly to Contractor, duly submitted in compliance with the procedural requirements set forth herein: seeking an adjustment of Contract Price or Contract Times, or both; contesting an initial decision by Engineer concerning the requirements of the Contract Documents or the acceptability of Work under the Contract Documents; contesting Engineer's decision regarding a Change Proposal; seeking resolution of a contractual issue that Engineer has declined to address; or seeking other relief with respect to the terms of the Contract; or (b) a demand or assertion by Contractor directly to Owner, duly submitted in compliance with the procedural requirements set forth herein, contesting Engineer's decision regarding a Change Proposal; or seeking resolution of a contractual issue that Engineer has declined to address. A demand for money or services by a third party is not a Claim.

11. *Constituent of Concern*—Asbestos, petroleum, radioactive materials, polychlorinated biphenyls (PCBs), hazardous waste, and any substance, product, waste, or other material of any nature whatsoever that is or becomes listed, regulated, or addressed pursuant to (a) the Comprehensive Environmental Response, Compensation and Liability Act, 42 U.S.C. §§9601 et seq. ("CERCLA"); (b) the Hazardous Materials Transportation Act, 49 U.S.C. §§5501 et seq.; (c) the Resource Conservation and Recovery Act, 42 U.S.C. §§6901 et seq. ("RCRA"); (d) the Toxic Substances Control Act, 15 U.S.C. §§2601 et seq.; (e) the Clean Water Act, 33 U.S.C. §§1251 et seq.; (f) the Clean Air Act, 42 U.S.C. §§7401 et seq.; or (g) any other federal, state, or local statute, law, rule, regulation, ordinance, resolution, code, order, or decree regulating, relating to, or imposing liability or standards of conduct concerning, any hazardous, toxic, or dangerous waste, substance, or material.

12. *Contract*—The entire and integrated written contract between the Owner and Contractor concerning the Work.

13. *Contract Documents*—Those items so designated in the Agreement, and which together comprise the Contract.

14. *Contract Price*—The money that Owner has agreed to pay Contractor for completion of the Work in accordance with the Contract Documents. .

15. *Contract Times*—The number of days or the dates by which Contractor shall: (a) achieve Milestones, if any; (b) achieve Substantial Completion; and (c) complete the Work.

16. *Contractor*—The individual or entity with which Owner has contracted for performance of the Work.

17. *Cost of the Work*—See Paragraph 13.01 for definition.

18. *Drawings*—The part of the Contract that graphically shows the scope, extent, and character of the Work to be performed by Contractor.

19. *Effective Date of the Contract*—The date, indicated in the Agreement, on which the Contract becomes effective.

20. *Engineer*—The individual or entity named as such in the Agreement.

21. *Field Order*—A written order issued by Engineer which requires minor changes in the Work but does not change the Contract Price or the Contract Times.

22. *Hazardous Environmental Condition*—The presence at the Site of Constituents of Concern in such quantities or circumstances that may present a danger to persons or property exposed thereto. The presence at the Site of materials that are necessary for the execution of the Work, or that are to be incorporated in the Work, and that are controlled and contained pursuant to industry practices, Laws and Regulations, and the requirements of the Contract, does not establish a Hazardous Environmental Condition.

23. *Laws and Regulations; Laws or Regulations*—Any and all applicable laws, statutes, rules, regulations, ordinances, codes, and orders of any and all governmental bodies, agencies, authorities, and courts having jurisdiction.

24. *Liens*—Charges, security interests, or encumbrances upon Contract-related funds, real property, or personal property.

25. *Milestone*—A principal event in the performance of the Work that the Contract requires Contractor to achieve by an intermediate completion date or by a time prior to Substantial Completion of all the Work.

26. *Notice of Award*—The written notice by Owner to a Bidder of Owner's acceptance of the Bid.

27. *Notice to Proceed*—A written notice by Owner to Contractor fixing the date on which the Contract Times will commence to run and on which Contractor shall start to perform the Work.

28. *Owner*—The individual or entity with which Contractor has contracted regarding the Work, and which has agreed to pay Contractor for the performance of the Work, pursuant to the terms of the Contract.

29. *Progress Schedule*—A schedule, prepared and maintained by Contractor, describing the sequence and duration of the activities comprising the Contractor's plan to accomplish the Work within the Contract Times.

30. *Project*—The total undertaking to be accomplished for Owner by engineers, contractors, and others, including planning, study, design, construction, testing, commissioning, and start-up, and of which the Work to be performed under the Contract Documents is a part.

31. *Project Manual*—The written documents prepared for, or made available for, procuring and constructing the Work, including but not limited to the Bidding Documents or other construction procurement documents, geotechnical and existing conditions information, the Agreement, bond forms, General Conditions, Supplementary Conditions, and Specifications. The contents of the Project Manual may be bound in one or more volumes.

32. *Resident Project Representative*—The authorized representative of Engineer assigned to assist Engineer at the Site. As used herein, the term Resident Project Representative or "RPR" includes any assistants or field staff of Resident Project Representative.

33. *Samples*—Physical examples of materials, equipment, or workmanship that are representative of some portion of the Work and that establish the standards by which such portion of the Work will be judged.

34. *Schedule of Submittals*—A schedule, prepared and maintained by Contractor, of required submittals and the time requirements for Engineer's review of the submittals and the performance of related construction activities.

35. *Schedule of Values*—A schedule, prepared and maintained by Contractor, allocating portions of the Contract Price to various portions of the Work and used as the basis for reviewing Contractor's Applications for Payment.

36. *Shop Drawings*—All drawings, diagrams, illustrations, schedules, and other data or information that are specifically prepared or assembled by or for Contractor and submitted by Contractor to illustrate some portion of the Work. Shop Drawings, whether approved or not, are not Drawings and are not Contract Documents.

37. *Site*—Lands or areas indicated in the Contract Documents as being furnished by Owner upon which the Work is to be performed, including rights-of-way and easements, and such other lands furnished by Owner which are designated for the use of Contractor.

38. *Specifications*—The part of the Contract that consists of written requirements for materials, equipment, systems, standards, and workmanship as applied to the Work, and certain administrative requirements and procedural matters applicable to the Work.

39. *Subcontractor*—An individual or entity having a direct contract with Contractor or with any other Subcontractor for the performance of a part of the Work.

40. *Substantial Completion*—The time at which the Work (or a specified part thereof) has progressed to the point where, in the opinion of Engineer, the Work (or a specified part

thereof) is sufficiently complete, in accordance with the Contract Documents, so that the Work (or a specified part thereof) can be utilized for the purposes for which it is intended. The terms "substantially complete" and "substantially completed" as applied to all or part of the Work refer to Substantial Completion thereof.

41. *Successful Bidder*—The Bidder whose Bid the Owner accepts, and to which the Owner makes an award of contract, subject to stated conditions.

42. *Supplementary Conditions*—The part of the Contract that amends or supplements these General Conditions.

43. *Supplier*—A manufacturer, fabricator, supplier, distributor, materialman, or vendor having a direct contract with Contractor or with any Subcontractor to furnish materials or equipment to be incorporated in the Work by Contractor or a Subcontractor.

44. *Technical Data*—Those items expressly identified as Technical Data in the Supplementary Conditions, with respect to either (a) subsurface conditions at the Site, or physical conditions relating to existing surface or subsurface structures at the Site (except Underground Facilities) or (b) Hazardous Environmental Conditions at the Site. If no such express identifications of Technical Data have been made with respect to conditions at the Site, then the data contained in boring logs, recorded measurements of subsurface water levels, laboratory test results, and other factual, objective information regarding conditions at the Site that are set forth in any geotechnical or environmental report prepared for the Project and made available to Contractor are hereby defined as Technical Data with respect to conditions at the Site under Paragraphs 5.03, 5.04, and 5.06.

45. *Underground Facilities*—All underground pipelines, conduits, ducts, cables, wires, manholes, vaults, tanks, tunnels, or other such facilities or attachments, and any encasements containing such facilities, including but not limited to those that convey electricity, gases, steam, liquid petroleum products, telephone or other communications, fiber optic transmissions, cable television, water, wastewater, storm water, other liquids or chemicals, or traffic or other control systems.

46. *Unit Price Work*—Work to be paid for on the basis of unit prices.

47. *Work*—The entire construction or the various separately identifiable parts thereof required to be provided under the Contract Documents. Work includes and is the result of performing or providing all labor, services, and documentation necessary to produce such construction; furnishing, installing, and incorporating all materials and equipment into such construction; and may include related services such as testing, start-up, and commissioning, all as required by the Contract Documents.

48. *Work Change Directive*—A written directive to Contractor issued on or after the Effective Date of the Contract, signed by Owner and recommended by Engineer, ordering an addition, deletion, or revision in the Work.

1.02 *Terminology*

A. The words and terms discussed in the following paragraphs are not defined but, when used in the Bidding Requirements or Contract Documents, have the indicated meaning.

B. *Intent of Certain Terms or Adjectives*:

1. The Contract Documents include the terms "as allowed," "as approved," "as ordered," "as directed" or terms of like effect or import to authorize an exercise of professional judgment by Engineer. In addition, the adjectives "reasonable," "suitable," "acceptable," "proper," "satisfactory," or adjectives of like effect or import are used to describe an action or determination of Engineer as to the Work. It is intended that such exercise of professional judgment, action, or determination will be solely to evaluate, in

general, the Work for compliance with the information in the Contract Documents and with the design concept of the Project as a functioning whole as shown or indicated in the Contract Documents (unless there is a specific statement indicating otherwise). The use of any such term or adjective is not intended to and shall not be effective to assign to Engineer any duty or authority to supervise or direct the performance of the Work, or any duty or authority to undertake responsibility contrary to the provisions of Article 10 or any other provision of the Contract Documents.

C. *Day*:

1. The word "day" means a calendar day of 24 hours measured from midnight to the next midnight.

D. *Defective*:

1. The word "defective," when modifying the word "Work," refers to Work that is unsatisfactory, faulty, or deficient in that it:

a. does not conform to the Contract Documents; or

b. does not meet the requirements of any applicable inspection, reference standard, test, or approval referred to in the Contract Documents; or

c. has been damaged prior to Engineer's recommendation of final payment (unless responsibility for the protection thereof has been assumed by Owner at Substantial Completion in accordance with Paragraph 15.03 or 15.04).

E. *Furnish, Install, Perform, Provide*:

1. The word "furnish," when used in connection with services, materials, or equipment, shall mean to supply and deliver said services, materials, or equipment to the Site (or some other specified location) ready for use or installation and in usable or operable condition.

2. The word "install," when used in connection with services, materials, or equipment, shall mean to put into use or place in final position said services, materials, or equipment complete and ready for intended use.

3. The words "perform" or "provide," when used in connection with services, materials, or equipment, shall mean to furnish and install said services, materials, or equipment complete and ready for intended use.

4. If the Contract Documents establish an obligation of Contractor with respect to specific services, materials, or equipment, but do not expressly use any of the four words "furnish," "install," "perform," or "provide," then Contractor shall furnish and install said services, materials, or equipment complete and ready for intended use.

F. Unless stated otherwise in the Contract Documents, words or phrases that have a well-known technical or construction industry or trade meaning are used in the Contract Documents in accordance with such recognized meaning.

ARTICLE 2 – PRELIMINARY MATTERS

2.01 *Delivery of Bonds and Evidence of Insurance*

A. *Bonds*: When Contractor delivers the executed counterparts of the Agreement to Owner, Contractor shall also deliver to Owner such bonds as Contractor may be required to furnish.

B. *Evidence of Contractor's Insurance*: When Contractor delivers the executed counterparts of the Agreement to Owner, Contractor shall also deliver to Owner, with copies to each named insured and additional insured (as identified in the Supplementary Conditions or elsewhere

in the Contract), the certificates and other evidence of insurance required to be provided by Contractor in accordance with Article 6.

C. *Evidence of Owner's Insurance*: After receipt of the executed counterparts of the Agreement and all required bonds and insurance documentation, Owner shall promptly deliver to Contractor, with copies to each named insured and additional insured (as identified in the Supplementary Conditions or otherwise), the certificates and other evidence of insurance required to be provided by Owner under Article 6.

2.02 *Copies of Documents*

A. Owner shall furnish to Contractor four printed copies of the Contract (including one fully executed counterpart of the Agreement), and one copy in electronic portable document format (PDF). Additional printed copies will be furnished upon request at the cost of reproduction.

B. Owner shall maintain and safeguard at least one original printed record version of the Contract, including Drawings and Specifications signed and sealed by Engineer and other design professionals. Owner shall make such original printed record version of the Contract available to Contractor for review. Owner may delegate the responsibilities under this provision to Engineer.

2.03 *Before Starting Construction*

A. *Preliminary Schedules*: Within 10 days after the Effective Date of the Contract (or as otherwise specifically required by the Contract Documents), Contractor shall submit to Engineer for timely review:

1. a preliminary Progress Schedule indicating the times (numbers of days or dates) for starting and completing the various stages of the Work, including any Milestones specified in the Contract;

2. a preliminary Schedule of Submittals; and

3. a preliminary Schedule of Values for all of the Work which includes quantities and prices of items which when added together equal the Contract Price and subdivides the Work into component parts in sufficient detail to serve as the basis for progress payments during performance of the Work. Such prices will include an appropriate amount of overhead and profit applicable to each item of Work.

2.04 *Preconstruction Conference; Designation of Authorized Representatives*

A. Before any Work at the Site is started, a conference attended by Owner, Contractor, Engineer, and others as appropriate will be held to establish a working understanding among the parties as to the Work and to discuss the schedules referred to in Paragraph 2.03.A, procedures for handling Shop Drawings, Samples, and other submittals, processing Applications for Payment, electronic or digital transmittals, and maintaining required records.

B. At this conference Owner and Contractor each shall designate, in writing, a specific individual to act as its authorized representative with respect to the services and responsibilities under the Contract. Such individuals shall have the authority to transmit and receive information, render decisions relative to the Contract, and otherwise act on behalf of each respective party.

2.05 *Initial Acceptance of Schedules*

A. At least 10 days before submission of the first Application for Payment a conference, attended by Contractor, Engineer, and others as appropriate, will be held to review for acceptability to Engineer as provided below the schedules submitted in accordance with Paragraph 2.03.A. Contractor shall have an additional 10 days to make corrections and

adjustments and to complete and resubmit the schedules. No progress payment shall be made to Contractor until acceptable schedules are submitted to Engineer.

1. The Progress Schedule will be acceptable to Engineer if it provides an orderly progression of the Work to completion within the Contract Times. Such acceptance will not impose on Engineer responsibility for the Progress Schedule, for sequencing, scheduling, or progress of the Work, nor interfere with or relieve Contractor from Contractor's full responsibility therefor.
2. Contractor's Schedule of Submittals will be acceptable to Engineer if it provides a workable arrangement for reviewing and processing the required submittals.
3. Contractor's Schedule of Values will be acceptable to Engineer as to form and substance if it provides a reasonable allocation of the Contract Price to the component parts of the Work.

2.06 *Electronic Transmittals*

A. Except as otherwise stated elsewhere in the Contract, the Owner, Engineer, and Contractor may transmit, and shall accept, Project-related correspondence, text, data, documents, drawings, information, and graphics, including but not limited to Shop Drawings and other submittals, in electronic media or digital format, either directly, or through access to a secure Project website.

B. If the Contract does not establish protocols for electronic or digital transmittals, then Owner, Engineer, and Contractor shall jointly develop such protocols.

C. When transmitting items in electronic media or digital format, the transmitting party makes no representations as to long term compatibility, usability, or readability of the items resulting from the recipient's use of software application packages, operating systems, or computer hardware differing from those used in the drafting or transmittal of the items, or from those established in applicable transmittal protocols.

ARTICLE 3 – DOCUMENTS: INTENT, REQUIREMENTS, REUSE

3.01 *Intent*

A. The Contract Documents are complementary; what is required by one is as binding as if required by all.

B. It is the intent of the Contract Documents to describe a functionally complete project (or part thereof) to be constructed in accordance with the Contract Documents.

C. Unless otherwise stated in the Contract Documents, if there is a discrepancy between the electronic or digital versions of the Contract Documents (including any printed copies derived from such electronic or digital versions) and the printed record version, the printed record version shall govern.

D. The Contract supersedes prior negotiations, representations, and agreements, whether written or oral.

E. Engineer will issue clarifications and interpretations of the Contract Documents as provided herein.

3.02 *Reference Standards*

A. Standards Specifications, Codes, Laws and Regulations

1. Reference in the Contract Documents to standard specifications, manuals, reference standards, or codes of any technical society, organization, or association, or to Laws or Regulations, whether such reference be specific or by implication, shall mean the

standard specification, manual, reference standard, code, or Laws or Regulations in effect at the time of opening of Bids (or on the Effective Date of the Contract if there were no Bids), except as may be otherwise specifically stated in the Contract Documents.

2. No provision of any such standard specification, manual, reference standard, or code, or any instruction of a Supplier, shall be effective to change the duties or responsibilities of Owner, Contractor, or Engineer, or any of their subcontractors, consultants, agents, or employees, from those set forth in the part of the Contract Documents prepared by or for Engineer. No such provision or instruction shall be effective to assign to Owner, Engineer, or any of their officers, directors, members, partners, employees, agents, consultants, or subcontractors, any duty or authority to supervise or direct the performance of the Work or any duty or authority to undertake responsibility inconsistent with the provisions of the part of the Contract Documents prepared by or for Engineer.

3.03 *Reporting and Resolving Discrepancies*

A. *Reporting Discrepancies*:

1. *Contractor's Verification of Figures and Field Measurements*: Before undertaking each part of the Work, Contractor shall carefully study the Contract Documents, and check and verify pertinent figures and dimensions therein, particularly with respect to applicable field measurements. Contractor shall promptly report in writing to Engineer any conflict, error, ambiguity, or discrepancy that Contractor discovers, or has actual knowledge of, and shall not proceed with any Work affected thereby until the conflict, error, ambiguity, or discrepancy is resolved, by a clarification or interpretation by Engineer, or by an amendment or supplement to the Contract Documents issued pursuant to Paragraph 11.01.

2. *Contractor's Review of Contract Documents*: If, before or during the performance of the Work, Contractor discovers any conflict, error, ambiguity, or discrepancy within the Contract Documents, or between the Contract Documents and (a) any applicable Law or Regulation, (b) actual field conditions, (c) any standard specification, manual, reference standard, or code, or (d) any instruction of any Supplier, then Contractor shall promptly report it to Engineer in writing. Contractor shall not proceed with the Work affected thereby (except in an emergency as required by Paragraph 7.15) until the conflict, error, ambiguity, or discrepancy is resolved, by a clarification or interpretation by Engineer, or by an amendment or supplement to the Contract Documents issued pursuant to Paragraph 11.01.

3. Contractor shall not be liable to Owner or Engineer for failure to report any conflict, error, ambiguity, or discrepancy in the Contract Documents unless Contractor had actual knowledge thereof.

B. *Resolving Discrepancies*:

1. Except as may be otherwise specifically stated in the Contract Documents, the provisions of the part of the Contract Documents prepared by or for Engineer shall take precedence in resolving any conflict, error, ambiguity, or discrepancy between such provisions of the Contract Documents and:

a. the provisions of any standard specification, manual, reference standard, or code, or the instruction of any Supplier (whether or not specifically incorporated by reference as a Contract Document); or

b. the provisions of any Laws or Regulations applicable to the performance of the Work (unless such an interpretation of the provisions of the Contract Documents would result in violation of such Law or Regulation).

3.04 *Requirements of the Contract Documents*

A. During the performance of the Work and until final payment, Contractor and Owner shall submit to the Engineer all matters in question concerning the requirements of the Contract Documents (sometimes referred to as requests for information or interpretation—RFIs), or relating to the acceptability of the Work under the Contract Documents, as soon as possible after such matters arise. Engineer will be the initial interpreter of the requirements of the Contract Documents, and judge of the acceptability of the Work thereunder.

B. Engineer will, with reasonable promptness, render a written clarification, interpretation, or decision on the issue submitted, or initiate an amendment or supplement to the Contract Documents. Engineer's written clarification, interpretation, or decision will be final and binding on Contractor, unless it appeals by submitting a Change Proposal, and on Owner, unless it appeals by filing a Claim.

C. If a submitted matter in question concerns terms and conditions of the Contract Documents that do not involve (1) the performance or acceptability of the Work under the Contract Documents, (2) the design (as set forth in the Drawings, Specifications, or otherwise), or (3) other engineering or technical matters, then Engineer will promptly give written notice to Owner and Contractor that Engineer is unable to provide a decision or interpretation. If Owner and Contractor are unable to agree on resolution of such a matter in question, either party may pursue resolution as provided in Article 12.

3.05 *Reuse of Documents*

A. Contractor and its Subcontractors and Suppliers shall not:

1. have or acquire any title to or ownership rights in any of the Drawings, Specifications, or other documents (or copies of any thereof) prepared by or bearing the seal of Engineer or its consultants, including electronic media editions, or reuse any such Drawings, Specifications, other documents, or copies thereof on extensions of the Project or any other project without written consent of Owner and Engineer and specific written verification or adaptation by Engineer; or

2. have or acquire any title or ownership rights in any other Contract Documents, reuse any such Contract Documents for any purpose without Owner's express written consent, or violate any copyrights pertaining to such Contract Documents.

B. The prohibitions of this Paragraph 3.05 will survive final payment, or termination of the Contract. Nothing herein shall preclude Contractor from retaining copies of the Contract Documents for record purposes.

ARTICLE 4 – COMMENCEMENT AND PROGRESS OF THE WORK

4.01 *Commencement of Contract Times; Notice to Proceed*

A. The Contract Times will commence to run on the thirtieth day after the Effective Date of the Contract or, if a Notice to Proceed is given, on the day indicated in the Notice to Proceed. A Notice to Proceed may be given at any time within 30 days after the Effective Date of the Contract. In no event will the Contract Times commence to run later than the sixtieth day after the day of Bid opening or the thirtieth day after the Effective Date of the Contract, whichever date is earlier.

4.02 *Starting the Work*

A. Contractor shall start to perform the Work on the date when the Contract Times commence to run. No Work shall be done at the Site prior to such date.

4.03 *Reference Points*

A. Owner shall provide engineering surveys to establish reference points for construction which in Engineer's judgment are necessary to enable Contractor to proceed with the Work. Contractor shall be responsible for laying out the Work, shall protect and preserve the established reference points and property monuments, and shall make no changes or relocations without the prior written approval of Owner. Contractor shall report to Engineer whenever any reference point or property monument is lost or destroyed or requires relocation because of necessary changes in grades or locations, and shall be responsible for the accurate replacement or relocation of such reference points or property monuments by professionally qualified personnel.

4.04 *Progress Schedule*

A. Contractor shall adhere to the Progress Schedule established in accordance with Paragraph 2.05 as it may be adjusted from time to time as provided below.

1. Contractor shall submit to Engineer for acceptance (to the extent indicated in Paragraph 2.05) proposed adjustments in the Progress Schedule that will not result in changing the Contract Times.

2. Proposed adjustments in the Progress Schedule that will change the Contract Times shall be submitted in accordance with the requirements of Article 11.

B. Contractor shall carry on the Work and adhere to the Progress Schedule during all disputes or disagreements with Owner. No Work shall be delayed or postponed pending resolution of any disputes or disagreements, or during any appeal process, except as permitted by Paragraph 16.04, or as Owner and Contractor may otherwise agree in writing.

4.05 *Delays in Contractor's Progress*

A. If Owner, Engineer, or anyone for whom Owner is responsible, delays, disrupts, or interferes with the performance or progress of the Work, then Contractor shall be entitled to an equitable adjustment in the Contract Times and Contract Price. Contractor's entitlement to an adjustment of the Contract Times is conditioned on such adjustment being essential to Contractor's ability to complete the Work within the Contract Times.

B. Contractor shall not be entitled to an adjustment in Contract Price or Contract Times for delay, disruption, or interference caused by or within the control of Contractor. Delay, disruption, and interference attributable to and within the control of a Subcontractor or Supplier shall be deemed to be within the control of Contractor.

C. If Contractor's performance or progress is delayed, disrupted, or interfered with by unanticipated causes not the fault of and beyond the control of Owner, Contractor, and those for which they are responsible, then Contractor shall be entitled to an equitable adjustment in Contract Times. Contractor's entitlement to an adjustment of the Contract Times is conditioned on such adjustment being essential to Contractor's ability to complete the Work within the Contract Times. Such an adjustment shall be Contractor's sole and exclusive remedy for the delays, disruption, and interference described in this paragraph. Causes of delay, disruption, or interference that may give rise to an adjustment in Contract Times under this paragraph include but are not limited to the following:

1. severe and unavoidable natural catastrophes such as fires, floods, epidemics, and earthquakes;

2. abnormal weather conditions;

3. acts or failures to act of utility owners (other than those performing other work at or adjacent to the Site by arrangement with the Owner, as contemplated in Article 8); and

4. acts of war or terrorism.

D. Delays, disruption, and interference to the performance or progress of the Work resulting from the existence of a differing subsurface or physical condition, an Underground Facility that was not shown or indicated by the Contract Documents, or not shown or indicated with reasonable accuracy, and those resulting from Hazardous Environmental Conditions, are governed by Article 5.

E. Paragraph 8.03 governs delays, disruption, and interference to the performance or progress of the Work resulting from the performance of certain other work at or adjacent to the Site.

F. Contractor shall not be entitled to an adjustment in Contract Price or Contract Times for any delay, disruption, or interference if such delay is concurrent with a delay, disruption, or interference caused by or within the control of Contractor.

G. Contractor must submit any Change Proposal seeking an adjustment in Contract Price or Contract Times under this paragraph within 30 days of the commencement of the delaying, disrupting, or interfering event.

ARTICLE 5 – AVAILABILITY OF LANDS; SUBSURFACE AND PHYSICAL CONDITIONS; HAZARDOUS ENVIRONMENTAL CONDITIONS

5.01 *Availability of Lands*

A. Owner shall furnish the Site. Owner shall notify Contractor of any encumbrances or restrictions not of general application but specifically related to use of the Site with which Contractor must comply in performing the Work.

B. Upon reasonable written request, Owner shall furnish Contractor with a current statement of record legal title and legal description of the lands upon which permanent improvements are to be made and Owner's interest therein as necessary for giving notice of or filing a mechanic's or construction lien against such lands in accordance with applicable Laws and Regulations.

C. Contractor shall provide for all additional lands and access thereto that may be required for temporary construction facilities or storage of materials and equipment.

5.02 *Use of Site and Other Areas*

A. *Limitation on Use of Site and Other Areas*:

1. Contractor shall confine construction equipment, temporary construction facilities, the storage of materials and equipment, and the operations of workers to the Site, adjacent areas that Contractor has arranged to use through construction easements or otherwise, and other adjacent areas permitted by Laws and Regulations, and shall not unreasonably encumber the Site and such other adjacent areas with construction equipment or other materials or equipment. Contractor shall assume full responsibility for (a) damage to the Site; (b) damage to any such other adjacent areas used for Contractor's operations; (c) damage to any other adjacent land or areas; and (d) for injuries and losses sustained by the owners or occupants of any such land or areas; provided that such damage or injuries result from the performance of the Work or from other actions or conduct of the Contractor or those for which Contractor is responsible.

2. If a damage or injury claim is made by the owner or occupant of any such land or area because of the performance of the Work, or because of other actions or conduct of the Contractor or those for which Contractor is responsible, Contractor shall (a) take immediate corrective or remedial action as required by Paragraph 7.12, or otherwise; (b) promptly attempt to settle the claim as to all parties through negotiations with such owner or occupant, or otherwise resolve the claim by arbitration or other dispute resolution proceeding, or at law; and (c) to the fullest extent permitted by Laws and Regulations, indemnify and hold harmless Owner and Engineer, and the officers,

directors, members, partners, employees, agents, consultants and subcontractors of each and any of them from and against any such claim, and against all costs, losses, and damages (including but not limited to all fees and charges of engineers, architects, attorneys, and other professionals and all court or arbitration or other dispute resolution costs) arising out of or relating to any claim or action, legal or equitable, brought by any such owner or occupant against Owner, Engineer, or any other party indemnified hereunder to the extent caused directly or indirectly, in whole or in part by, or based upon, Contractor's performance of the Work, or because of other actions or conduct of the Contractor or those for which Contractor is responsible.

B. *Removal of Debris During Performance of the Work*: During the progress of the Work the Contractor shall keep the Site and other adjacent areas free from accumulations of waste materials, rubbish, and other debris. Removal and disposal of such waste materials, rubbish, and other debris shall conform to applicable Laws and Regulations.

C. *Cleaning*: Prior to Substantial Completion of the Work Contractor shall clean the Site and the Work and make it ready for utilization by Owner. At the completion of the Work Contractor shall remove from the Site and adjacent areas all tools, appliances, construction equipment and machinery, and surplus materials and shall restore to original condition all property not designated for alteration by the Contract Documents.

D. *Loading of Structures*: Contractor shall not load nor permit any part of any structure to be loaded in any manner that will endanger the structure, nor shall Contractor subject any part of the Work or adjacent structures or land to stresses or pressures that will endanger them.

5.03 *Subsurface and Physical Conditions*

A. *Reports and Drawings*: The Supplementary Conditions identify:

1. those reports known to Owner of explorations and tests of subsurface conditions at or adjacent to the Site;

2. those drawings known to Owner of physical conditions relating to existing surface or subsurface structures at the Site (except Underground Facilities); and

3. Technical Data contained in such reports and drawings.

B. *Reliance by Contractor on Technical Data Authorized*: Contractor may rely upon the accuracy of the Technical Data expressly identified in the Supplementary Conditions with respect to such reports and drawings, but such reports and drawings are not Contract Documents. If no such express identification has been made, then Contractor may rely upon the accuracy of the Technical Data (as defined in Article 1) contained in any geotechnical or environmental report prepared for the Project and made available to Contractor. Except for such reliance on Technical Data, Contractor may not rely upon or make any claim against Owner or Engineer, or any of their officers, directors, members, partners, employees, agents, consultants, or subcontractors, with respect to:

1. the completeness of such reports and drawings for Contractor's purposes, including, but not limited to, any aspects of the means, methods, techniques, sequences, and procedures of construction to be employed by Contractor, and safety precautions and programs incident thereto; or

2. other data, interpretations, opinions, and information contained in such reports or shown or indicated in such drawings; or

3. any Contractor interpretation of or conclusion drawn from any Technical Data or any such other data, interpretations, opinions, or information.

5.04 *Differing Subsurface or Physical Conditions*

A. *Notice by Contractor*: If Contractor believes that any subsurface or physical condition that is uncovered or revealed at the Site either:

1. is of such a nature as to establish that any Technical Data on which Contractor is entitled to rely as provided in Paragraph 5.03 is materially inaccurate; or

2. is of such a nature as to require a change in the Drawings or Specifications; or

3. differs materially from that shown or indicated in the Contract Documents; or

4. is of an unusual nature, and differs materially from conditions ordinarily encountered and generally recognized as inherent in work of the character provided for in the Contract Documents;

then Contractor shall, promptly after becoming aware thereof and before further disturbing the subsurface or physical conditions or performing any Work in connection therewith (except in an emergency as required by Paragraph 7.15), notify Owner and Engineer in writing about such condition. Contractor shall not further disturb such condition or perform any Work in connection therewith (except with respect to an emergency) until receipt of a written statement permitting Contractor to do so.

B. *Engineer's Review*: After receipt of written notice as required by the preceding paragraph, Engineer will promptly review the subsurface or physical condition in question; determine the necessity of Owner's obtaining additional exploration or tests with respect to the condition; conclude whether the condition falls within any one or more of the differing site condition categories in Paragraph 5.04.A above; obtain any pertinent cost or schedule information from Contractor; prepare recommendations to Owner regarding the Contractor's resumption of Work in connection with the subsurface or physical condition in question and the need for any change in the Drawings or Specifications; and advise Owner in writing of Engineer's findings, conclusions, and recommendations.

C. *Owner's Statement to Contractor Regarding Site Condition*: After receipt of Engineer's written findings, conclusions, and recommendations, Owner shall issue a written statement to Contractor (with a copy to Engineer) regarding the subsurface or physical condition in question, addressing the resumption of Work in connection with such condition, indicating whether any change in the Drawings or Specifications will be made, and adopting or rejecting Engineer's written findings, conclusions, and recommendations, in whole or in part.

D. *Possible Price and Times Adjustments*:

1. Contractor shall be entitled to an equitable adjustment in Contract Price or Contract Times, or both, to the extent that the existence of a differing subsurface or physical condition, or any related delay, disruption, or interference, causes an increase or decrease in Contractor's cost of, or time required for, performance of the Work; subject, however, to the following:

a. such condition must fall within any one or more of the categories described in Paragraph 5.04.A;

b. with respect to Work that is paid for on a unit price basis, any adjustment in Contract Price will be subject to the provisions of Paragraph 13.03; and,

c. Contractor's entitlement to an adjustment of the Contract Times is conditioned on such adjustment being essential to Contractor's ability to complete the Work within the Contract Times.

2. Contractor shall not be entitled to any adjustment in the Contract Price or Contract Times with respect to a subsurface or physical condition if:

    a. Contractor knew of the existence of such condition at the time Contractor made a commitment to Owner with respect to Contract Price and Contract Times by the submission of a Bid or becoming bound under a negotiated contract, or otherwise; or

    b. the existence of such condition reasonably could have been discovered or revealed as a result of any examination, investigation, exploration, test, or study of the Site and contiguous areas expressly required by the Bidding Requirements or Contract Documents to be conducted by or for Contractor prior to Contractor's making such commitment; or

    c. Contractor failed to give the written notice as required by Paragraph 5.04.A.

3. If Owner and Contractor agree regarding Contractor's entitlement to and the amount or extent of any adjustment in the Contract Price or Contract Times, or both, then any such adjustment shall be set forth in a Change Order.

4. Contractor may submit a Change Proposal regarding its entitlement to or the amount or extent of any adjustment in the Contract Price or Contract Times, or both, no later than 30 days after Owner's issuance of the Owner's written statement to Contractor regarding the subsurface or physical condition in question.

5.05 *Underground Facilities*

A. *Contractor's Responsibilities*: The information and data shown or indicated in the Contract Documents with respect to existing Underground Facilities at or adjacent to the Site is based on information and data furnished to Owner or Engineer by the owners of such Underground Facilities, including Owner, or by others. Unless it is otherwise expressly provided in the Supplementary Conditions:

    1. Owner and Engineer do not warrant or guarantee the accuracy or completeness of any such information or data provided by others; and

    2. the cost of all of the following will be included in the Contract Price, and Contractor shall have full responsibility for:

        a. reviewing and checking all information and data regarding existing Underground Facilities at the Site;

        b. locating all Underground Facilities shown or indicated in the Contract Documents as being at the Site;

        c. coordination of the Work with the owners (including Owner) of such Underground Facilities, during construction; and

        d. the safety and protection of all existing Underground Facilities at the Site, and repairing any damage thereto resulting from the Work.

B. *Notice by Contractor*: If Contractor believes that an Underground Facility that is uncovered or revealed at the Site was not shown or indicated in the Contract Documents, or was not shown or indicated with reasonable accuracy, then Contractor shall, promptly after becoming aware thereof and before further disturbing conditions affected thereby or performing any Work in connection therewith (except in an emergency as required by Paragraph 7.15), identify the owner of such Underground Facility and give written notice to that owner and to Owner and Engineer.

C. *Engineer's Review*: Engineer will promptly review the Underground Facility and conclude whether such Underground Facility was not shown or indicated in the Contract Documents,

or was not shown or indicated with reasonable accuracy; obtain any pertinent cost or schedule information from Contractor; prepare recommendations to Owner regarding the Contractor's resumption of Work in connection with the Underground Facility in question; determine the extent, if any, to which a change is required in the Drawings or Specifications to reflect and document the consequences of the existence or location of the Underground Facility; and advise Owner in writing of Engineer's findings, conclusions, and recommendations. During such time, Contractor shall be responsible for the safety and protection of such Underground Facility.

D. *Owner's Statement to Contractor Regarding Underground Facility*: After receipt of Engineer's written findings, conclusions, and recommendations, Owner shall issue a written statement to Contractor (with a copy to Engineer) regarding the Underground Facility in question, addressing the resumption of Work in connection with such Underground Facility, indicating whether any change in the Drawings or Specifications will be made, and adopting or rejecting Engineer's written findings, conclusions, and recommendations in whole or in part.

E. *Possible Price and Times Adjustments*:

1. Contractor shall be entitled to an equitable adjustment in the Contract Price or Contract Times, or both, to the extent that any existing Underground Facility at the Site that was not shown or indicated in the Contract Documents, or was not shown or indicated with reasonable accuracy, or any related delay, disruption, or interference, causes an increase or decrease in Contractor's cost of, or time required for, performance of the Work; subject, however, to the following:

a. Contractor did not know of and could not reasonably have been expected to be aware of or to have anticipated the existence or actual location of the Underground Facility in question;

b. With respect to Work that is paid for on a unit price basis, any adjustment in Contract Price will be subject to the provisions of Paragraph 13.03;

c. Contractor's entitlement to an adjustment of the Contract Times is conditioned on such adjustment being essential to Contractor's ability to complete the Work within the Contract Times; and

d. Contractor gave the notice required in Paragraph 5.05.B.

2. If Owner and Contractor agree regarding Contractor's entitlement to and the amount or extent of any adjustment in the Contract Price or Contract Times, or both, then any such adjustment shall be set forth in a Change Order.

3. Contractor may submit a Change Proposal regarding its entitlement to or the amount or extent of any adjustment in the Contract Price or Contract Times, or both, no later than 30 days after Owner's issuance of the Owner's written statement to Contractor regarding the Underground Facility in question.

5.06 *Hazardous Environmental Conditions at Site*

A. *Reports and Drawings*: The Supplementary Conditions identify:

1. those reports and drawings known to Owner relating to Hazardous Environmental Conditions that have been identified at or adjacent to the Site; and

2. Technical Data contained in such reports and drawings.

B. *Reliance by Contractor on Technical Data Authorized*: Contractor may rely upon the accuracy of the Technical Data expressly identified in the Supplementary Conditions with respect to such reports and drawings, but such reports and drawings are not Contract Documents. If no such express identification has been made, then Contractor may rely on the

accuracy of the Technical Data (as defined in Article 1) contained in any geotechnical or environmental report prepared for the Project and made available to Contractor. Except for such reliance on Technical Data, Contractor may not rely upon or make any claim against Owner or Engineer, or any of their officers, directors, members, partners, employees, agents, consultants, or subcontractors with respect to:

1. the completeness of such reports and drawings for Contractor's purposes, including, but not limited to, any aspects of the means, methods, techniques, sequences and procedures of construction to be employed by Contractor and safety precautions and programs incident thereto; or
2. other data, interpretations, opinions and information contained in such reports or shown or indicated in such drawings; or
3. any Contractor interpretation of or conclusion drawn from any Technical Data or any such other data, interpretations, opinions or information.

C. Contractor shall not be responsible for removing or remediating any Hazardous Environmental Condition encountered, uncovered, or revealed at the Site unless such removal or remediation is expressly identified in the Contract Documents to be within the scope of the Work.

D. Contractor shall be responsible for controlling, containing, and duly removing all Constituents of Concern brought to the Site by Contractor, Subcontractors, Suppliers, or anyone else for whom Contractor is responsible, and for any associated costs; and for the costs of removing and remediating any Hazardous Environmental Condition created by the presence of any such Constituents of Concern.

E. If Contractor encounters, uncovers, or reveals a Hazardous Environmental Condition whose removal or remediation is not expressly identified in the Contract Documents as being within the scope of the Work, or if Contractor or anyone for whom Contractor is responsible creates a Hazardous Environmental Condition, then Contractor shall immediately: (1) secure or otherwise isolate such condition; (2) stop all Work in connection with such condition and in any area affected thereby (except in an emergency as required by Paragraph 7.15); and (3) notify Owner and Engineer (and promptly thereafter confirm such notice in writing). Owner shall promptly consult with Engineer concerning the necessity for Owner to retain a qualified expert to evaluate such condition or take corrective action, if any. Promptly after consulting with Engineer, Owner shall take such actions as are necessary to permit Owner to timely obtain required permits and provide Contractor the written notice required by Paragraph 5.06.F. If Contractor or anyone for whom Contractor is responsible created the Hazardous Environmental Condition in question, then Owner may remove and remediate the Hazardous Environmental Condition, and impose a set-off against payments to account for the associated costs.

F. Contractor shall not resume Work in connection with such Hazardous Environmental Condition or in any affected area until after Owner has obtained any required permits related thereto, and delivered written notice to Contractor either (1) specifying that such condition and any affected area is or has been rendered safe for the resumption of Work, or (2) specifying any special conditions under which such Work may be resumed safely.

G. If Owner and Contractor cannot agree as to entitlement to or on the amount or extent, if any, of any adjustment in Contract Price or Contract Times, or both, as a result of such Work stoppage or such special conditions under which Work is agreed to be resumed by Contractor, then within 30 days of Owner's written notice regarding the resumption of Work, Contractor may submit a Change Proposal, or Owner may impose a set-off.

H. If after receipt of such written notice Contractor does not agree to resume such Work based on a reasonable belief it is unsafe, or does not agree to resume such Work under such special

conditions, then Owner may order the portion of the Work that is in the area affected by such condition to be deleted from the Work, following the contractual change procedures in Article 11. Owner may have such deleted portion of the Work performed by Owner's own forces or others in accordance with Article 8.

I. To the fullest extent permitted by Laws and Regulations, Owner shall indemnify and hold harmless Contractor, Subcontractors, and Engineer, and the officers, directors, members, partners, employees, agents, consultants, and subcontractors of each and any of them from and against all claims, costs, losses, and damages (including but not limited to all fees and charges of engineers, architects, attorneys, and other professionals and all court or arbitration or other dispute resolution costs) arising out of or relating to a Hazardous Environmental Condition, provided that such Hazardous Environmental Condition (1) was not shown or indicated in the Drawings, Specifications, or other Contract Documents, identified as Technical Data entitled to limited reliance pursuant to Paragraph 5.06.B, or identified in the Contract Documents to be included within the scope of the Work, and (2) was not created by Contractor or by anyone for whom Contractor is responsible. Nothing in this Paragraph 5.06.H shall obligate Owner to indemnify any individual or entity from and against the consequences of that individual's or entity's own negligence.

J. To the fullest extent permitted by Laws and Regulations, Contractor shall indemnify and hold harmless Owner and Engineer, and the officers, directors, members, partners, employees, agents, consultants, and subcontractors of each and any of them from and against all claims, costs, losses, and damages (including but not limited to all fees and charges of engineers, architects, attorneys, and other professionals and all court or arbitration or other dispute resolution costs) arising out of or relating to the failure to control, contain, or remove a Constituent of Concern brought to the Site by Contractor or by anyone for whom Contractor is responsible, or to a Hazardous Environmental Condition created by Contractor or by anyone for whom Contractor is responsible. Nothing in this Paragraph 5.06.J shall obligate Contractor to indemnify any individual or entity from and against the consequences of that individual's or entity's own negligence.

K. The provisions of Paragraphs 5.03, 5.04, and 5.05 do not apply to the presence of Constituents of Concern or to a Hazardous Environmental Condition uncovered or revealed at the Site.

ARTICLE 6 – BONDS AND INSURANCE

6.01 *Performance, Payment, and Other Bonds*

A. Contractor shall furnish a performance bond and a payment bond, each in an amount at least equal to the Contract Price, as security for the faithful performance and payment of all of Contractor's obligations under the Contract. These bonds shall remain in effect until one year after the date when final payment becomes due or until completion of the correction period specified in Paragraph 15.08, whichever is later, except as provided otherwise by Laws or Regulations, the Supplementary Conditions, or other specific provisions of the Contract. Contractor shall also furnish such other bonds as are required by the Supplementary Conditions or other specific provisions of the Contract.

B. All bonds shall be in the form prescribed by the Contract except as provided otherwise by Laws or Regulations, and shall be executed by such sureties as are named in "Companies Holding Certificates of Authority as Acceptable Sureties on Federal Bonds and as Acceptable Reinsuring Companies" as published in Circular 570 (as amended and supplemented) by the Financial Management Service, Surety Bond Branch, U.S. Department of the Treasury. A bond signed by an agent or attorney-in-fact must be accompanied by a certified copy of that individual's authority to bind the surety. The evidence of authority

shall show that it is effective on the date the agent or attorney-in-fact signed the accompanying bond.

C. Contractor shall obtain the required bonds from surety companies that are duly licensed or authorized in the jurisdiction in which the Project is located to issue bonds in the required amounts.

D. If the surety on a bond furnished by Contractor is declared bankrupt or becomes insolvent, or its right to do business is terminated in any state or jurisdiction where any part of the Project is located, or the surety ceases to meet the requirements above, then Contractor shall promptly notify Owner and Engineer and shall, within 20 days after the event giving rise to such notification, provide another bond and surety, both of which shall comply with the bond and surety requirements above.

E. If Contractor has failed to obtain a required bond, Owner may exclude the Contractor from the Site and exercise Owner's termination rights under Article 16.

F. Upon request, Owner shall provide a copy of the payment bond to any Subcontractor, Supplier, or other person or entity claiming to have furnished labor or materials used in the performance of the Work.

6.02 *Insurance—General Provisions*

A. Owner and Contractor shall obtain and maintain insurance as required in this Article and in the Supplementary Conditions.

B. All insurance required by the Contract to be purchased and maintained by Owner or Contractor shall be obtained from insurance companies that are duly licensed or authorized, in the state or jurisdiction in which the Project is located, to issue insurance policies for the required limits and coverages. Unless a different standard is indicated in the Supplementary Conditions, all companies that provide insurance policies required under this Contract shall have an A.M. Best rating of A-VII or better.

C. Contractor shall deliver to Owner, with copies to each named insured and additional insured (as identified in this Article, in the Supplementary Conditions, or elsewhere in the Contract), certificates of insurance establishing that Contractor has obtained and is maintaining the policies, coverages, and endorsements required by the Contract. Upon request by Owner or any other insured, Contractor shall also furnish other evidence of such required insurance, including but not limited to copies of policies and endorsements, and documentation of applicable self-insured retentions and deductibles. Contractor may block out (redact) any confidential premium or pricing information contained in any policy or endorsement furnished under this provision.

D. Owner shall deliver to Contractor, with copies to each named insured and additional insured (as identified in this Article, the Supplementary Conditions, or elsewhere in the Contract), certificates of insurance establishing that Owner has obtained and is maintaining the policies, coverages, and endorsements required of Owner by the Contract (if any). Upon request by Contractor or any other insured, Owner shall also provide other evidence of such required insurance (if any), including but not limited to copies of policies and endorsements, and documentation of applicable self-insured retentions and deductibles. Owner may block out (redact) any confidential premium or pricing information contained in any policy or endorsement furnished under this provision.

E. Failure of Owner or Contractor to demand such certificates or other evidence of the other party's full compliance with these insurance requirements, or failure of Owner or Contractor to identify a deficiency in compliance from the evidence provided, shall not be construed as a waiver of the other party's obligation to obtain and maintain such insurance.

F. If either party does not purchase or maintain all of the insurance required of such party by the Contract, such party shall notify the other party in writing of such failure to purchase prior to the start of the Work, or of such failure to maintain prior to any change in the required coverage.

G. If Contractor has failed to obtain and maintain required insurance, Owner may exclude the Contractor from the Site, impose an appropriate set-off against payment, and exercise Owner's termination rights under Article 16.

H. Without prejudice to any other right or remedy, if a party has failed to obtain required insurance, the other party may elect to obtain equivalent insurance to protect such other party's interests at the expense of the party who was required to provide such coverage, and the Contract Price shall be adjusted accordingly.

I. Owner does not represent that insurance coverage and limits established in this Contract necessarily will be adequate to protect Contractor or Contractor's interests.

J. The insurance and insurance limits required herein shall not be deemed as a limitation on Contractor's liability under the indemnities granted to Owner and other individuals and entities in the Contract.

6.03 *Contractor's Insurance*

A. *Workers' Compensation*: Contractor shall purchase and maintain workers' compensation and employer's liability insurance for:

1. claims under workers' compensation, disability benefits, and other similar employee benefit acts.

2. United States Longshoreman and Harbor Workers' Compensation Act and Jones Act coverage (if applicable).

3. claims for damages because of bodily injury, occupational sickness or disease, or death of Contractor's employees (by stop-gap endorsement in monopolist worker's compensation states).

4. Foreign voluntary worker compensation (if applicable).

B. *Commercial General Liability—Claims Covered*: Contractor shall purchase and maintain commercial general liability insurance, covering all operations by or on behalf of Contractor, on an occurrence basis, against:

1. claims for damages because of bodily injury, sickness or disease, or death of any person other than Contractor's employees.

2. claims for damages insured by reasonably available personal injury liability coverage.

3. claims for damages, other than to the Work itself, because of injury to or destruction of tangible property wherever located, including loss of use resulting therefrom.

C. *Commercial General Liability—Form and Content*: Contractor's commercial liability policy shall be written on a 1996 (or later) ISO commercial general liability form (occurrence form) and include the following coverages and endorsements:

1. Products and completed operations coverage:

a. Such insurance shall be maintained for three years after final payment.

b. Contractor shall furnish Owner and each other additional insured (as identified in the Supplementary Conditions or elsewhere in the Contract) evidence of continuation of such insurance at final payment and three years thereafter.

2. Blanket contractual liability coverage, to the extent permitted by law, including but not limited to coverage of Contractor's contractual indemnity obligations in Paragraph 7.18.

3. Broad form property damage coverage.

4. Severability of interest.

5. Underground, explosion, and collapse coverage.

6. Personal injury coverage.

7. Additional insured endorsements that include both ongoing operations and products and completed operations coverage through ISO Endorsements CG 20 10 10 01 and CG 20 37 10 01 (together); or CG 20 10 07 04 and CG 20 37 07 04 (together); or their equivalent.

8. For design professional additional insureds, ISO Endorsement CG 20 32 07 04, "Additional Insured—Engineers, Architects or Surveyors Not Engaged by the Named Insured" or its equivalent.

D. *Automobile liability*: Contractor shall purchase and maintain automobile liability insurance against claims for damages because of bodily injury or death of any person or property damage arising out of the ownership, maintenance, or use of any motor vehicle. The automobile liability policy shall be written on an occurrence basis.

E. *Umbrella or excess liability*: Contractor shall purchase and maintain umbrella or excess liability insurance written over the underlying employer's liability, commercial general liability, and automobile liability insurance described in the paragraphs above. Subject to industry-standard exclusions, the coverage afforded shall follow form as to each and every one of the underlying policies.

F. *Contractor's pollution liability insurance*: Contractor shall purchase and maintain a policy covering third-party injury and property damage claims, including clean-up costs, as a result of pollution conditions arising from Contractor's operations and completed operations. This insurance shall be maintained for no less than three years after final completion.

G. *Additional insureds*: The Contractor's commercial general liability, automobile liability, umbrella or excess, and pollution liability policies shall include and list as additional insureds Owner and Engineer, and any individuals or entities identified in the Supplementary Conditions; include coverage for the respective officers, directors, members, partners, employees, agents, consultants, and subcontractors of each and any of all such additional insureds; and the insurance afforded to these additional insureds shall provide primary coverage for all claims covered thereby (including as applicable those arising from both ongoing and completed operations) on a non-contributory basis. Contractor shall obtain all necessary endorsements to support these requirements.

H. *Contractor's professional liability insurance*: If Contractor will provide or furnish professional services under this Contract, through a delegation of professional design services or otherwise, then Contractor shall be responsible for purchasing and maintaining applicable professional liability insurance. This insurance shall provide protection against claims arising out of performance of professional design or related services, and caused by a negligent error, omission, or act for which the insured party is legally liable. It shall be maintained throughout the duration of the Contract and for a minimum of two years after Substantial Completion. If such professional design services are performed by a Subcontractor, and not by Contractor itself, then the requirements of this paragraph may be satisfied through the purchasing and maintenance of such insurance by such Subcontractor.

I. *General provisions*: The policies of insurance required by this Paragraph 6.03 shall:

1. include at least the specific coverages provided in this Article.

2. be written for not less than the limits of liability provided in this Article and in the Supplementary Conditions, or required by Laws or Regulations, whichever is greater.

3. contain a provision or endorsement that the coverage afforded will not be canceled, materially changed, or renewal refused until at least 10 days prior written notice has been given to Contractor. Within three days of receipt of any such written notice, Contractor shall provide a copy of the notice to Owner, Engineer, and each other insured under the policy.

4. remain in effect at least until final payment (and longer if expressly required in this Article) and at all times thereafter when Contractor may be correcting, removing, or replacing defective Work as a warranty or correction obligation, or otherwise, or returning to the Site to conduct other tasks arising from the Contract Documents.

5. be appropriate for the Work being performed and provide protection from claims that may arise out of or result from Contractor's performance of the Work and Contractor's other obligations under the Contract Documents, whether it is to be performed by Contractor, any Subcontractor or Supplier, or by anyone directly or indirectly employed by any of them to perform any of the Work, or by anyone for whose acts any of them may be liable.

J. The coverage requirements for specific policies of insurance must be met by such policies, and not by reference to excess or umbrella insurance provided in other policies.

6.04 *Owner's Liability Insurance*

A. In addition to the insurance required to be provided by Contractor under Paragraph 6.03, Owner, at Owner's option, may purchase and maintain at Owner's expense Owner's own liability insurance as will protect Owner against claims which may arise from operations under the Contract Documents.

B. Owner's liability policies, if any, operate separately and independently from policies required to be provided by Contractor, and Contractor cannot rely upon Owner's liability policies for any of Contractor's obligations to the Owner, Engineer, or third parties.

6.05 *Property Insurance*

A. *Builder's Risk*: Unless otherwise provided in the Supplementary Conditions, Contractor shall purchase and maintain builder's risk insurance upon the Work on a completed value basis, in the amount of the full insurable replacement cost thereof (subject to such deductible amounts as may be provided in the Supplementary Conditions or required by Laws and Regulations). This insurance shall:

1. include the Owner and Contractor as named insureds, and all Subcontractors, and any individuals or entities required by the Supplementary Conditions to be insured under such builder's risk policy, as insureds or named insureds. For purposes of the remainder of this Paragraph 6.05, Paragraphs 6.06 and 6.07, and any corresponding Supplementary Conditions, the parties required to be insured shall collectively be referred to as "insureds."

2. be written on a builder's risk "all risk" policy form that shall at least include insurance for physical loss or damage to the Work, temporary buildings, falsework, and materials and equipment in transit, and shall insure against at least the following perils or causes of loss: fire; lightning; windstorm; riot; civil commotion; terrorism; vehicle impact; aircraft; smoke; theft; vandalism and malicious mischief; mechanical breakdown, boiler explosion, and artificially generated electric current; earthquake; volcanic activity, and other earth movement; flood; collapse; explosion; debris removal; demolition occasioned by enforcement of Laws and Regulations; water damage (other than that caused by flood); and such other perils or causes of loss as may be specifically required

by the Supplementary Conditions. If insurance against mechanical breakdown, boiler explosion, and artificially generated electric current; earthquake; volcanic activity, and other earth movement; or flood, are not commercially available under builder's risk policies, by endorsement or otherwise, such insurance may be provided through other insurance policies acceptable to Owner and Contractor.

3. cover, as insured property, at least the following: (a) the Work and all materials, supplies, machinery, apparatus, equipment, fixtures, and other property of a similar nature that are to be incorporated into or used in the preparation, fabrication, construction, erection, or completion of the Work, including Owner-furnished or assigned property; (b) spare parts inventory required within the scope of the Contract; and (c) temporary works which are not intended to form part of the permanent constructed Work but which are intended to provide working access to the Site, or to the Work under construction, or which are intended to provide temporary support for the Work under construction, including scaffolding, form work, fences, shoring, falsework, and temporary structures.
4. cover expenses incurred in the repair or replacement of any insured property (including but not limited to fees and charges of engineers and architects).
5. extend to cover damage or loss to insured property while in temporary storage at the Site or in a storage location outside the Site (but not including property stored at the premises of a manufacturer or Supplier).
6. extend to cover damage or loss to insured property while in transit.
7. allow for partial occupation or use of the Work by Owner, such that those portions of the Work that are not yet occupied or used by Owner shall remain covered by the builder's risk insurance.
8. allow for the waiver of the insurer's subrogation rights, as set forth below.
9. provide primary coverage for all losses and damages caused by the perils or causes of loss covered.
10. not include a co-insurance clause.
11. include an exception for ensuing losses from physical damage or loss with respect to any defective workmanship, design, or materials exclusions.
12. include performance/hot testing and start-up.
13. be maintained in effect, subject to the provisions herein regarding Substantial Completion and partial occupancy or use of the Work by Owner, until the Work is complete.

B. *Notice of Cancellation or Change*: All the policies of insurance (and the certificates or other evidence thereof) required to be purchased and maintained in accordance with this Paragraph 6.05 will contain a provision or endorsement that the coverage afforded will not be canceled or materially changed or renewal refused until at least 10 days prior written notice has been given to the purchasing policyholder. Within three days of receipt of any such written notice, the purchasing policyholder shall provide a copy of the notice to each other insured.

C. *Deductibles*: The purchaser of any required builder's risk or property insurance shall pay for costs not covered because of the application of a policy deductible.

D. *Partial Occupancy or Use by Owner*: If Owner will occupy or use a portion or portions of the Work prior to Substantial Completion of all the Work as provided in Paragraph 15.04, then Owner (directly, if it is the purchaser of the builder's risk policy, or through Contractor) will provide notice of such occupancy or use to the builder's risk insurer. The builder's risk insurance shall not be canceled or permitted to lapse on account of any such partial use or

occupancy; rather, those portions of the Work that are occupied or used by Owner may come off the builder's risk policy, while those portions of the Work not yet occupied or used by Owner shall remain covered by the builder's risk insurance.

E. *Additional Insurance*: If Contractor elects to obtain other special insurance to be included in or supplement the builder's risk or property insurance policies provided under this Paragraph 6.05, it may do so at Contractor's expense.

F. *Insurance of Other Property*: If the express insurance provisions of the Contract do not require or address the insurance of a property item or interest, such as tools, construction equipment, or other personal property owned by Contractor, a Subcontractor, or an employee of Contractor or a Subcontractor, then the entity or individual owning such property item will be responsible for deciding whether to insure it, and if so in what amount.

6.06 *Waiver of Rights*

A. All policies purchased in accordance with Paragraph 6.05, expressly including the builder's risk policy, shall contain provisions to the effect that in the event of payment of any loss or damage the insurers will have no rights of recovery against any insureds thereunder, or against Engineer or its consultants, or their officers, directors, members, partners, employees, agents, consultants, or subcontractors. Owner and Contractor waive all rights against each other and the respective officers, directors, members, partners, employees, agents, consultants, and subcontractors of each and any of them, for all losses and damages caused by, arising out of, or resulting from any of the perils or causes of loss covered by such policies and any other property insurance applicable to the Work; and, in addition, waive all such rights against Engineer, its consultants, all Subcontractors, all individuals or entities identified in the Supplementary Conditions as insureds, and the officers, directors, members, partners, employees, agents, consultants, and subcontractors of each and any of them, under such policies for losses and damages so caused. None of the above waivers shall extend to the rights that any party making such waiver may have to the proceeds of insurance held by Owner or Contractor as trustee or fiduciary, or otherwise payable under any policy so issued.

B. Owner waives all rights against Contractor, Subcontractors, and Engineer, and the officers, directors, members, partners, employees, agents, consultants and subcontractors of each and any of them, for:

1. loss due to business interruption, loss of use, or other consequential loss extending beyond direct physical loss or damage to Owner's property or the Work caused by, arising out of, or resulting from fire or other perils whether or not insured by Owner; and

2. loss or damage to the completed Project or part thereof caused by, arising out of, or resulting from fire or other insured peril or cause of loss covered by any property insurance maintained on the completed Project or part thereof by Owner during partial occupancy or use pursuant to Paragraph 15.04, after Substantial Completion pursuant to Paragraph 15.03, or after final payment pursuant to Paragraph 15.06.

C. Any insurance policy maintained by Owner covering any loss, damage or consequential loss referred to in Paragraph 6.06.B shall contain provisions to the effect that in the event of payment of any such loss, damage, or consequential loss, the insurers will have no rights of recovery against Contractor, Subcontractors, or Engineer, or the officers, directors, members, partners, employees, agents, consultants, or subcontractors of each and any of them.

D. Contractor shall be responsible for assuring that the agreement under which a Subcontractor performs a portion of the Work contains provisions whereby the Subcontractor waives all rights against Owner, Contractor, all individuals or entities identified in the Supplementary

Conditions as insureds, the Engineer and its consultants, and the officers, directors, members, partners, employees, agents, consultants, and subcontractors of each and any of them, for all losses and damages caused by, arising out of, relating to, or resulting from any of the perils or causes of loss covered by builder's risk insurance and any other property insurance applicable to the Work.

6.07 *Receipt and Application of Property Insurance Proceeds*

A. Any insured loss under the builder's risk and other policies of insurance required by Paragraph 6.05 will be adjusted and settled with the named insured that purchased the policy. Such named insured shall act as fiduciary for the other insureds, and give notice to such other insureds that adjustment and settlement of a claim is in progress. Any other insured may state its position regarding a claim for insured loss in writing within 15 days after notice of such claim.

B. Proceeds for such insured losses may be made payable by the insurer either jointly to multiple insureds, or to the named insured that purchased the policy in its own right and as fiduciary for other insureds, subject to the requirements of any applicable mortgage clause. A named insured receiving insurance proceeds under the builder's risk and other policies of insurance required by Paragraph 6.05 shall distribute such proceeds in accordance with such agreement as the parties in interest may reach, or as otherwise required under the dispute resolution provisions of this Contract or applicable Laws and Regulations.

C. If no other special agreement is reached, the damaged Work shall be repaired or replaced, the money so received applied on account thereof, and the Work and the cost thereof covered by Change Order, if needed.

ARTICLE 7 – CONTRACTOR'S RESPONSIBILITIES

7.01 *Supervision and Superintendence*

A. Contractor shall supervise, inspect, and direct the Work competently and efficiently, devoting such attention thereto and applying such skills and expertise as may be necessary to perform the Work in accordance with the Contract Documents. Contractor shall be solely responsible for the means, methods, techniques, sequences, and procedures of construction.

B. At all times during the progress of the Work, Contractor shall assign a competent resident superintendent who shall not be replaced without written notice to Owner and Engineer except under extraordinary circumstances.

7.02 *Labor; Working Hours*

A. Contractor shall provide competent, suitably qualified personnel to survey and lay out the Work and perform construction as required by the Contract Documents. Contractor shall at all times maintain good discipline and order at the Site.

B. Except as otherwise required for the safety or protection of persons or the Work or property at the Site or adjacent thereto, and except as otherwise stated in the Contract Documents, all Work at the Site shall be performed during regular working hours, Monday through Friday. Contractor will not perform Work on a Saturday, Sunday, or any legal holiday. Contractor may perform Work outside regular working hours or on Saturdays, Sundays, or legal holidays only with Owner's written consent, which will not be unreasonably withheld.

7.03 *Services, Materials, and Equipment*

A. Unless otherwise specified in the Contract Documents, Contractor shall provide and assume full responsibility for all services, materials, equipment, labor, transportation, construction equipment and machinery, tools, appliances, fuel, power, light, heat, telephone, water, sanitary facilities, temporary facilities, and all other facilities and incidentals necessary for

the performance, testing, start up, and completion of the Work, whether or not such items are specifically called for in the Contract Documents.

B. All materials and equipment incorporated into the Work shall be of good quality and new, except as otherwise provided in the Contract Documents. All special warranties and guarantees required by the Specifications shall expressly run to the benefit of Owner. If required by Engineer, Contractor shall furnish satisfactory evidence (including reports of required tests) as to the source, kind, and quality of materials and equipment.

C. All materials and equipment shall be stored, applied, installed, connected, erected, protected, used, cleaned, and conditioned in accordance with instructions of the applicable Supplier, except as otherwise may be provided in the Contract Documents.

7.04 *"Or Equals"*

A. Whenever an item of material or equipment is specified or described in the Contract Documents by using the name of a proprietary item or the name of a particular Supplier, the Contract Price has been based upon Contractor furnishing such item as specified. The specification or description of such an item is intended to establish the type, function, appearance, and quality required. Unless the specification or description contains or is followed by words reading that no like, equivalent, or "or equal" item is permitted, Contractor may request that Engineer authorize the use of other items of material or equipment, or items from other proposed suppliers under the circumstances described below.

1. If Engineer in its sole discretion determines that an item of material or equipment proposed by Contractor is functionally equal to that named and sufficiently similar so that no change in related Work will be required, Engineer shall deem it an "or equal" item. For the purposes of this paragraph, a proposed item of material or equipment will be considered functionally equal to an item so named if:

a. in the exercise of reasonable judgment Engineer determines that:

1) it is at least equal in materials of construction, quality, durability, appearance, strength, and design characteristics;

2) it will reliably perform at least equally well the function and achieve the results imposed by the design concept of the completed Project as a functioning whole;

3) it has a proven record of performance and availability of responsive service; and

4) it is not objectionable to Owner.

b. Contractor certifies that, if approved and incorporated into the Work:

1) there will be no increase in cost to the Owner or increase in Contract Times; and

2) it will conform substantially to the detailed requirements of the item named in the Contract Documents.

B. *Contractor's Expense*: Contractor shall provide all data in support of any proposed "or equal" item at Contractor's expense.

C. *Engineer's Evaluation and Determination*: Engineer will be allowed a reasonable time to evaluate each "or-equal" request. Engineer may require Contractor to furnish additional data about the proposed "or-equal" item. Engineer will be the sole judge of acceptability. No "or-equal" item will be ordered, furnished, installed, or utilized until Engineer's review is complete and Engineer determines that the proposed item is an "or-equal", which will be

evidenced by an approved Shop Drawing or other written communication. Engineer will advise Contractor in writing of any negative determination.

D. *Effect of Engineer's Determination*: Neither approval nor denial of an "or-equal" request shall result in any change in Contract Price. The Engineer's denial of an "or-equal" request shall be final and binding, and may not be reversed through an appeal under any provision of the Contract Documents.

E. *Treatment as a Substitution Request*: If Engineer determines that an item of material or equipment proposed by Contractor does not qualify as an "or-equal" item, Contractor may request that Engineer considered the proposed item as a substitute pursuant to Paragraph 7.05.

7.05 *Substitutes*

A. Unless the specification or description of an item of material or equipment required to be furnished under the Contract Documents contains or is followed by words reading that no substitution is permitted, Contractor may request that Engineer authorize the use of other items of material or equipment under the circumstances described below. To the extent possible such requests shall be made before commencement of related construction at the Site.

1. Contractor shall submit sufficient information as provided below to allow Engineer to determine if the item of material or equipment proposed is functionally equivalent to that named and an acceptable substitute therefor. Engineer will not accept requests for review of proposed substitute items of material or equipment from anyone other than Contractor.

2. The requirements for review by Engineer will be as set forth in Paragraph 7.05.B, as supplemented by the Specifications, and as Engineer may decide is appropriate under the circumstances.

3. Contractor shall make written application to Engineer for review of a proposed substitute item of material or equipment that Contractor seeks to furnish or use. The application:

a. shall certify that the proposed substitute item will:

1) perform adequately the functions and achieve the results called for by the general design,

2) be similar in substance to that specified, and

3) be suited to the same use as that specified.

b. will state:

1) the extent, if any, to which the use of the proposed substitute item will necessitate a change in Contract Times,

2) whether use of the proposed substitute item in the Work will require a change in any of the Contract Documents (or in the provisions of any other direct contract with Owner for other work on the Project) to adapt the design to the proposed substitute item, and

3) whether incorporation or use of the proposed substitute item in connection with the Work is subject to payment of any license fee or royalty.

c. will identify:

1) all variations of the proposed substitute item from that specified, and

2) available engineering, sales, maintenance, repair, and replacement services.

d. shall contain an itemized estimate of all costs or credits that will result directly or indirectly from use of such substitute item, including but not limited to changes in Contract Price, shared savings, costs of redesign, and claims of other contractors affected by any resulting change.

B. *Engineer's Evaluation and Determination*: Engineer will be allowed a reasonable time to evaluate each substitute request, and to obtain comments and direction from Owner. Engineer may require Contractor to furnish additional data about the proposed substitute item. Engineer will be the sole judge of acceptability. No substitute will be ordered, furnished, installed, or utilized until Engineer's review is complete and Engineer determines that the proposed item is an acceptable substitute. Engineer's determination will be evidenced by a Field Order or a proposed Change Order accounting for the substitution itself and all related impacts, including changes in Contract Price or Contract Times. Engineer will advise Contractor in writing of any negative determination.

C. *Special Guarantee*: Owner may require Contractor to furnish at Contractor's expense a special performance guarantee or other surety with respect to any substitute.

D. *Reimbursement of Engineer's Cost*: Engineer will record Engineer's costs in evaluating a substitute proposed or submitted by Contractor. Whether or not Engineer approves a substitute so proposed or submitted by Contractor, Contractor shall reimburse Owner for the reasonable charges of Engineer for evaluating each such proposed substitute. Contractor shall also reimburse Owner for the reasonable charges of Engineer for making changes in the Contract Documents (or in the provisions of any other direct contract with Owner) resulting from the acceptance of each proposed substitute.

E. *Contractor's Expense*: Contractor shall provide all data in support of any proposed substitute at Contractor's expense.

F. *Effect of Engineer's Determination*: If Engineer approves the substitution request, Contractor shall execute the proposed Change Order and proceed with the substitution. The Engineer's denial of a substitution request shall be final and binding, and may not be reversed through an appeal under any provision of the Contract Documents. Contractor may challenge the scope of reimbursement costs imposed under Paragraph 7.05.D, by timely submittal of a Change Proposal.

7.06 *Concerning Subcontractors, Suppliers, and Others*

A. Contractor may retain Subcontractors and Suppliers for the performance of parts of the Work. Such Subcontractors and Suppliers must be acceptable to Owner.

B. Contractor shall retain specific Subcontractors, Suppliers, or other individuals or entities for the performance of designated parts of the Work if required by the Contract to do so.

C. Subsequent to the submittal of Contractor's Bid or final negotiation of the terms of the Contract, Owner may not require Contractor to retain any Subcontractor, Supplier, or other individual or entity to furnish or perform any of the Work against which Contractor has reasonable objection.

D. Prior to entry into any binding subcontract or purchase order, Contractor shall submit to Owner the identity of the proposed Subcontractor or Supplier (unless Owner has already deemed such proposed Subcontractor or Supplier acceptable, during the bidding process or otherwise). Such proposed Subcontractor or Supplier shall be deemed acceptable to Owner unless Owner raises a substantive, reasonable objection within five days.

E. Owner may require the replacement of any Subcontractor, Supplier, or other individual or entity retained by Contractor to perform any part of the Work. Owner also may require Contractor to retain specific replacements; provided, however, that Owner may not require a replacement to which Contractor has a reasonable objection. If Contractor has submitted the

identity of certain Subcontractors, Suppliers, or other individuals or entities for acceptance by Owner, and Owner has accepted it (either in writing or by failing to make written objection thereto), then Owner may subsequently revoke the acceptance of any such Subcontractor, Supplier, or other individual or entity so identified solely on the basis of substantive, reasonable objection after due investigation. Contractor shall submit an acceptable replacement for the rejected Subcontractor, Supplier, or other individual or entity.

F. If Owner requires the replacement of any Subcontractor, Supplier, or other individual or entity retained by Contractor to perform any part of the Work, then Contractor shall be entitled to an adjustment in Contract Price or Contract Times, or both, with respect to the replacement; and Contractor shall initiate a Change Proposal for such adjustment within 30 days of Owner's requirement of replacement.

G. No acceptance by Owner of any such Subcontractor, Supplier, or other individual or entity, whether initially or as a replacement, shall constitute a waiver of the right of Owner to the completion of the Work in accordance with the Contract Documents.

H. On a monthly basis Contractor shall submit to Engineer a complete list of all Subcontractors and Suppliers having a direct contract with Contractor, and of all other Subcontractors and Suppliers known to Contractor at the time of submittal.

I. Contractor shall be fully responsible to Owner and Engineer for all acts and omissions of the Subcontractors, Suppliers, and other individuals or entities performing or furnishing any of the Work just as Contractor is responsible for Contractor's own acts and omissions.

J. Contractor shall be solely responsible for scheduling and coordinating the work of Subcontractors, Suppliers, and all other individuals or entities performing or furnishing any of the Work.

K. Contractor shall restrict all Subcontractors, Suppliers, and such other individuals or entities performing or furnishing any of the Work from communicating with Engineer or Owner, except through Contractor or in case of an emergency, or as otherwise expressly allowed herein.

L. The divisions and sections of the Specifications and the identifications of any Drawings shall not control Contractor in dividing the Work among Subcontractors or Suppliers or delineating the Work to be performed by any specific trade.

M. All Work performed for Contractor by a Subcontractor or Supplier shall be pursuant to an appropriate contractual agreement that specifically binds the Subcontractor or Supplier to the applicable terms and conditions of the Contract Documents for the benefit of Owner and Engineer.

N. Owner may furnish to any Subcontractor or Supplier, to the extent practicable, information about amounts paid to Contractor on account of Work performed for Contractor by the particular Subcontractor or Supplier.

O. Nothing in the Contract Documents:

1. shall create for the benefit of any such Subcontractor, Supplier, or other individual or entity any contractual relationship between Owner or Engineer and any such Subcontractor, Supplier, or other individual or entity; nor

2. shall create any obligation on the part of Owner or Engineer to pay or to see to the payment of any money due any such Subcontractor, Supplier, or other individual or entity except as may otherwise be required by Laws and Regulations.

7.07 *Patent Fees and Royalties*

A. Contractor shall pay all license fees and royalties and assume all costs incident to the use in the performance of the Work or the incorporation in the Work of any invention, design,

process, product, or device which is the subject of patent rights or copyrights held by others. If a particular invention, design, process, product, or device is specified in the Contract Documents for use in the performance of the Work and if, to the actual knowledge of Owner or Engineer, its use is subject to patent rights or copyrights calling for the payment of any license fee or royalty to others, the existence of such rights shall be disclosed by Owner in the Contract Documents.

B. To the fullest extent permitted by Laws and Regulations, Owner shall indemnify and hold harmless Contractor, and its officers, directors, members, partners, employees, agents, consultants, and subcontractors from and against all claims, costs, losses, and damages (including but not limited to all fees and charges of engineers, architects, attorneys, and other professionals, and all court or arbitration or other dispute resolution costs) arising out of or relating to any infringement of patent rights or copyrights incident to the use in the performance of the Work or resulting from the incorporation in the Work of any invention, design, process, product, or device specified in the Contract Documents, but not identified as being subject to payment of any license fee or royalty to others required by patent rights or copyrights.

C. To the fullest extent permitted by Laws and Regulations, Contractor shall indemnify and hold harmless Owner and Engineer, and the officers, directors, members, partners, employees, agents, consultants and subcontractors of each and any of them from and against all claims, costs, losses, and damages (including but not limited to all fees and charges of engineers, architects, attorneys, and other professionals and all court or arbitration or other dispute resolution costs) arising out of or relating to any infringement of patent rights or copyrights incident to the use in the performance of the Work or resulting from the incorporation in the Work of any invention, design, process, product, or device not specified in the Contract Documents.

7.08 *Permits*

A. Unless otherwise provided in the Contract Documents, Contractor shall obtain and pay for all construction permits and licenses. Owner shall assist Contractor, when necessary, in obtaining such permits and licenses. Contractor shall pay all governmental charges and inspection fees necessary for the prosecution of the Work which are applicable at the time of the submission of Contractor's Bid (or when Contractor became bound under a negotiated contract). Owner shall pay all charges of utility owners for connections for providing permanent service to the Work

7.09 *Taxes*

A. Contractor shall pay all sales, consumer, use, and other similar taxes required to be paid by Contractor in accordance with the Laws and Regulations of the place of the Project which are applicable during the performance of the Work.

7.10 *Laws and Regulations*

A. Contractor shall give all notices required by and shall comply with all Laws and Regulations applicable to the performance of the Work. Except where otherwise expressly required by applicable Laws and Regulations, neither Owner nor Engineer shall be responsible for monitoring Contractor's compliance with any Laws or Regulations.

B. If Contractor performs any Work or takes any other action knowing or having reason to know that it is contrary to Laws or Regulations, Contractor shall bear all resulting costs and losses, and shall indemnify and hold harmless Owner and Engineer, and the officers, directors, members, partners, employees, agents, consultants, and subcontractors of each and any of them from and against all claims, costs, losses, and damages (including but not limited to all fees and charges of engineers, architects, attorneys, and other professionals and all court or arbitration or other dispute resolution costs) arising out of or relating to such

Work or other action. It shall not be Contractor's responsibility to make certain that the Work described in the Contract Documents is in accordance with Laws and Regulations, but this shall not relieve Contractor of Contractor's obligations under Paragraph 3.03.

C. Owner or Contractor may give notice to the other party of any changes after the submission of Contractor's Bid (or after the date when Contractor became bound under a negotiated contract) in Laws or Regulations having an effect on the cost or time of performance of the Work, including but not limited to changes in Laws or Regulations having an effect on procuring permits and on sales, use, value-added, consumption, and other similar taxes. If Owner and Contractor are unable to agree on entitlement to or on the amount or extent, if any, of any adjustment in Contract Price or Contract Times resulting from such changes, then within 30 days of such notice Contractor may submit a Change Proposal, or Owner may initiate a Claim.

7.11 *Record Documents*

A. Contractor shall maintain in a safe place at the Site one printed record copy of all Drawings, Specifications, Addenda, Change Orders, Work Change Directives, Field Orders, written interpretations and clarifications, and approved Shop Drawings. Contractor shall keep such record documents in good order and annotate them to show changes made during construction. These record documents, together with all approved Samples, will be available to Engineer for reference. Upon completion of the Work, Contractor shall deliver these record documents to Engineer.

7.12 *Safety and Protection*

A. Contractor shall be solely responsible for initiating, maintaining, and supervising all safety precautions and programs in connection with the Work. Such responsibility does not relieve Subcontractors of their responsibility for the safety of persons or property in the performance of their work, nor for compliance with applicable safety Laws and Regulations. Contractor shall take all necessary precautions for the safety of, and shall provide the necessary protection to prevent damage, injury, or loss to:

1. all persons on the Site or who may be affected by the Work;

2. all the Work and materials and equipment to be incorporated therein, whether in storage on or off the Site; and

3. other property at the Site or adjacent thereto, including trees, shrubs, lawns, walks, pavements, roadways, structures, other work in progress, utilities, and Underground Facilities not designated for removal, relocation, or replacement in the course of construction.

B. Contractor shall comply with all applicable Laws and Regulations relating to the safety of persons or property, or to the protection of persons or property from damage, injury, or loss; and shall erect and maintain all necessary safeguards for such safety and protection. Contractor shall notify Owner; the owners of adjacent property, Underground Facilities, and other utilities; and other contractors and utility owners performing work at or adjacent to the Site, when prosecution of the Work may affect them, and shall cooperate with them in the protection, removal, relocation, and replacement of their property or work in progress.

C. Contractor shall comply with the applicable requirements of Owner's safety programs, if any. The Supplementary Conditions identify any Owner's safety programs that are applicable to the Work.

D. Contractor shall inform Owner and Engineer of the specific requirements of Contractor's safety program with which Owner's and Engineer's employees and representatives must comply while at the Site.

E. All damage, injury, or loss to any property referred to in Paragraph 7.12.A.2 or 7.12.A.3 caused, directly or indirectly, in whole or in part, by Contractor, any Subcontractor, Supplier, or any other individual or entity directly or indirectly employed by any of them to perform any of the Work, or anyone for whose acts any of them may be liable, shall be remedied by Contractor at its expense (except damage or loss attributable to the fault of Drawings or Specifications or to the acts or omissions of Owner or Engineer or anyone employed by any of them, or anyone for whose acts any of them may be liable, and not attributable, directly or indirectly, in whole or in part, to the fault or negligence of Contractor or any Subcontractor, Supplier, or other individual or entity directly or indirectly employed by any of them).

F. Contractor's duties and responsibilities for safety and protection shall continue until such time as all the Work is completed and Engineer has issued a notice to Owner and Contractor in accordance with Paragraph 15.06.B that the Work is acceptable (except as otherwise expressly provided in connection with Substantial Completion).

G. Contractor's duties and responsibilities for safety and protection shall resume whenever Contractor or any Subcontractor or Supplier returns to the Site to fulfill warranty or correction obligations, or to conduct other tasks arising from the Contract Documents.

7.13 *Safety Representative*

A. Contractor shall designate a qualified and experienced safety representative at the Site whose duties and responsibilities shall be the prevention of accidents and the maintaining and supervising of safety precautions and programs.

7.14 *Hazard Communication Programs*

A. Contractor shall be responsible for coordinating any exchange of material safety data sheets or other hazard communication information required to be made available to or exchanged between or among employers at the Site in accordance with Laws or Regulations.

7.15 *Emergencies*

A. In emergencies affecting the safety or protection of persons or the Work or property at the Site or adjacent thereto, Contractor is obligated to act to prevent threatened damage, injury, or loss. Contractor shall give Engineer prompt written notice if Contractor believes that any significant changes in the Work or variations from the Contract Documents have been caused thereby or are required as a result thereof. If Engineer determines that a change in the Contract Documents is required because of the action taken by Contractor in response to such an emergency, a Work Change Directive or Change Order will be issued.

7.16 *Shop Drawings, Samples, and Other Submittals*

A. *Shop Drawing and Sample Submittal Requirements*:

1. Before submitting a Shop Drawing or Sample, Contractor shall have:

a. reviewed and coordinated the Shop Drawing or Sample with other Shop Drawings and Samples and with the requirements of the Work and the Contract Documents;

b. determined and verified all field measurements, quantities, dimensions, specified performance and design criteria, installation requirements, materials, catalog numbers, and similar information with respect thereto;

c. determined and verified the suitability of all materials and equipment offered with respect to the indicated application, fabrication, shipping, handling, storage, assembly, and installation pertaining to the performance of the Work; and

d. determined and verified all information relative to Contractor's responsibilities for means, methods, techniques, sequences, and procedures of construction, and safety precautions and programs incident thereto.

2. Each submittal shall bear a stamp or specific written certification that Contractor has satisfied Contractor's obligations under the Contract Documents with respect to Contractor's review of that submittal, and that Contractor approves the submittal.

3. With each submittal, Contractor shall give Engineer specific written notice of any variations that the Shop Drawing or Sample may have from the requirements of the Contract Documents. This notice shall be set forth in a written communication separate from the Shop Drawings or Sample submittal; and, in addition, in the case of Shop Drawings by a specific notation made on each Shop Drawing submitted to Engineer for review and approval of each such variation.

B. *Submittal Procedures for Shop Drawings and Samples*: Contractor shall submit Shop Drawings and Samples to Engineer for review and approval in accordance with the accepted Schedule of Submittals. Each submittal will be identified as Engineer may require.

1. *Shop Drawings*:

a. Contractor shall submit the number of copies required in the Specifications.

b. Data shown on the Shop Drawings will be complete with respect to quantities, dimensions, specified performance and design criteria, materials, and similar data to show Engineer the services, materials, and equipment Contractor proposes to provide and to enable Engineer to review the information for the limited purposes required by Paragraph 7.16.D.

2. *Samples*:

a. Contractor shall submit the number of Samples required in the Specifications.

b. Contractor shall clearly identify each Sample as to material, Supplier, pertinent data such as catalog numbers, the use for which intended and other data as Engineer may require to enable Engineer to review the submittal for the limited purposes required by Paragraph 7.16.D.

3. Where a Shop Drawing or Sample is required by the Contract Documents or the Schedule of Submittals, any related Work performed prior to Engineer's review and approval of the pertinent submittal will be at the sole expense and responsibility of Contractor.

C. *Other Submittals*: Contractor shall submit other submittals to Engineer in accordance with the accepted Schedule of Submittals, and pursuant to the applicable terms of the Specifications.

D. *Engineer's Review*:

1. Engineer will provide timely review of Shop Drawings and Samples in accordance with the Schedule of Submittals acceptable to Engineer. Engineer's review and approval will be only to determine if the items covered by the submittals will, after installation or incorporation in the Work, conform to the information given in the Contract Documents and be compatible with the design concept of the completed Project as a functioning whole as indicated by the Contract Documents.

2. Engineer's review and approval will not extend to means, methods, techniques, sequences, or procedures of construction or to safety precautions or programs incident thereto.

3. Engineer's review and approval of a separate item as such will not indicate approval of the assembly in which the item functions.

4. Engineer's review and approval of a Shop Drawing or Sample shall not relieve Contractor from responsibility for any variation from the requirements of the Contract

Documents unless Contractor has complied with the requirements of Paragraph 7.16.A.3 and Engineer has given written approval of each such variation by specific written notation thereof incorporated in or accompanying the Shop Drawing or Sample. Engineer will document any such approved variation from the requirements of the Contract Documents in a Field Order.

5. Engineer's review and approval of a Shop Drawing or Sample shall not relieve Contractor from responsibility for complying with the requirements of Paragraph 7.16.A and B.

6. Engineer's review and approval of a Shop Drawing or Sample, or of a variation from the requirements of the Contract Documents, shall not, under any circumstances, change the Contract Times or Contract Price, unless such changes are included in a Change Order.

7. Neither Engineer's receipt, review, acceptance or approval of a Shop Drawing, Sample, or other submittal shall result in such item becoming a Contract Document.

8. Contractor shall perform the Work in compliance with the requirements and commitments set forth in approved Shop Drawings and Samples, subject to the provisions of Paragraph 7.16.D.4.

E. *Resubmittal Procedures*:

1. Contractor shall make corrections required by Engineer and shall return the required number of corrected copies of Shop Drawings and submit, as required, new Samples for review and approval. Contractor shall direct specific attention in writing to revisions other than the corrections called for by Engineer on previous submittals.

2. Contractor shall furnish required submittals with sufficient information and accuracy to obtain required approval of an item with no more than three submittals. Engineer will record Engineer's time for reviewing a fourth or subsequent submittal of a Shop Drawings, sample, or other item requiring approval, and Contractor shall be responsible for Engineer's charges to Owner for such time. Owner may impose a set-off against payments due to Contractor to secure reimbursement for such charges.

3. If Contractor requests a change of a previously approved submittal item, Contractor shall be responsible for Engineer's charges to Owner for its review time, and Owner may impose a set-off against payments due to Contractor to secure reimbursement for such charges, unless the need for such change is beyond the control of Contractor.

7.17 *Contractor's General Warranty and Guarantee*

A. Contractor warrants and guarantees to Owner that all Work will be in accordance with the Contract Documents and will not be defective. Engineer and its officers, directors, members, partners, employees, agents, consultants, and subcontractors shall be entitled to rely on Contractor's warranty and guarantee.

B. Contractor's warranty and guarantee hereunder excludes defects or damage caused by:

1. abuse, modification, or improper maintenance or operation by persons other than Contractor, Subcontractors, Suppliers, or any other individual or entity for whom Contractor is responsible; or

2. normal wear and tear under normal usage.

C. Contractor's obligation to perform and complete the Work in accordance with the Contract Documents shall be absolute. None of the following will constitute an acceptance of Work that is not in accordance with the Contract Documents or a release of Contractor's obligation to perform the Work in accordance with the Contract Documents:

1. observations by Engineer;
2. recommendation by Engineer or payment by Owner of any progress or final payment;
3. the issuance of a certificate of Substantial Completion by Engineer or any payment related thereto by Owner;
4. use or occupancy of the Work or any part thereof by Owner;
5. any review and approval of a Shop Drawing or Sample submittal;
6. the issuance of a notice of acceptability by Engineer;
7. any inspection, test, or approval by others; or
8. any correction of defective Work by Owner.

D. If the Contract requires the Contractor to accept the assignment of a contract entered into by Owner, then the specific warranties, guarantees, and correction obligations contained in the assigned contract shall govern with respect to Contractor's performance obligations to Owner for the Work described in the assigned contract.

7.18 *Indemnification*

A. To the fullest extent permitted by Laws and Regulations, and in addition to any other obligations of Contractor under the Contract or otherwise, Contractor shall indemnify and hold harmless Owner and Engineer, and the officers, directors, members, partners, employees, agents, consultants and subcontractors of each and any of them from and against all claims, costs, losses, and damages (including but not limited to all fees and charges of engineers, architects, attorneys, and other professionals and all court or arbitration or other dispute resolution costs) arising out of or relating to the performance of the Work, provided that any such claim, cost, loss, or damage is attributable to bodily injury, sickness, disease, or death, or to injury to or destruction of tangible property (other than the Work itself), including the loss of use resulting therefrom but only to the extent caused by any negligent act or omission of Contractor, any Subcontractor, any Supplier, or any individual or entity directly or indirectly employed by any of them to perform any of the Work or anyone for whose acts any of them may be liable.

B. In any and all claims against Owner or Engineer or any of their officers, directors, members, partners, employees, agents, consultants, or subcontractors by any employee (or the survivor or personal representative of such employee) of Contractor, any Subcontractor, any Supplier, or any individual or entity directly or indirectly employed by any of them to perform any of the Work, or anyone for whose acts any of them may be liable, the indemnification obligation under Paragraph 7.18.A shall not be limited in any way by any limitation on the amount or type of damages, compensation, or benefits payable by or for Contractor or any such Subcontractor, Supplier, or other individual or entity under workers' compensation acts, disability benefit acts, or other employee benefit acts.

C. The indemnification obligations of Contractor under Paragraph 7.18.A shall not extend to the liability of Engineer and Engineer's officers, directors, members, partners, employees, agents, consultants and subcontractors arising out of:

1. the preparation or approval of, or the failure to prepare or approve maps, Drawings, opinions, reports, surveys, Change Orders, designs, or Specifications; or
2. giving directions or instructions, or failing to give them, if that is the primary cause of the injury or damage.

7.19 *Delegation of Professional Design Services*

A. Contractor will not be required to provide professional design services unless such services are specifically required by the Contract Documents for a portion of the Work or unless such

services are required to carry out Contractor's responsibilities for construction means, methods, techniques, sequences and procedures. Contractor shall not be required to provide professional services in violation of applicable Laws and Regulations.

B. If professional design services or certifications by a design professional related to systems, materials, or equipment are specifically required of Contractor by the Contract Documents, Owner and Engineer will specify all performance and design criteria that such services must satisfy. Contractor shall cause such services or certifications to be provided by a properly licensed professional, whose signature and seal shall appear on all drawings, calculations, specifications, certifications, and other submittals prepared by such professional. Shop Drawings and other submittals related to the Work designed or certified by such professional, if prepared by others, shall bear such professional's written approval when submitted to Engineer.

C. Owner and Engineer shall be entitled to rely upon the adequacy, accuracy, and completeness of the services, certifications, or approvals performed by such design professionals, provided Owner and Engineer have specified to Contractor all performance and design criteria that such services must satisfy.

D. Pursuant to this paragraph, Engineer's review and approval of design calculations and design drawings will be only for the limited purpose of checking for conformance with performance and design criteria given and the design concept expressed in the Contract Documents. Engineer's review and approval of Shop Drawings and other submittals (except design calculations and design drawings) will be only for the purpose stated in Paragraph 7.16.D.1.

E. Contractor shall not be responsible for the adequacy of the performance or design criteria specified by Owner or Engineer.

ARTICLE 8 – OTHER WORK AT THE SITE

8.01 *Other Work*

A. In addition to and apart from the Work under the Contract Documents, the Owner may perform other work at or adjacent to the Site. Such other work may be performed by Owner's employees, or through contracts between the Owner and third parties. Owner may also arrange to have third-party utility owners perform work on their utilities and facilities at or adjacent to the Site.

B. If Owner performs other work at or adjacent to the Site with Owner's employees, or through contracts for such other work, then Owner shall give Contractor written notice thereof prior to starting any such other work. If Owner has advance information regarding the start of any utility work at or adjacent to the Site, Owner shall provide such information to Contractor.

C. Contractor shall afford each other contractor that performs such other work, each utility owner performing other work, and Owner, if Owner is performing other work with Owner's employees, proper and safe access to the Site, and provide a reasonable opportunity for the introduction and storage of materials and equipment and the execution of such other work. Contractor shall do all cutting, fitting, and patching of the Work that may be required to properly connect or otherwise make its several parts come together and properly integrate with such other work. Contractor shall not endanger any work of others by cutting, excavating, or otherwise altering such work; provided, however, that Contractor may cut or alter others' work with the written consent of Engineer and the others whose work will be affected.

D. If the proper execution or results of any part of Contractor's Work depends upon work performed by others under this Article 8, Contractor shall inspect such other work and promptly report to Engineer in writing any delays, defects, or deficiencies in such other work that render it unavailable or unsuitable for the proper execution and results of Contractor's

Work. Contractor's failure to so report will constitute an acceptance of such other work as fit and proper for integration with Contractor's Work except for latent defects and deficiencies in such other work.

8.02 *Coordination*

A. If Owner intends to contract with others for the performance of other work at or adjacent to the Site, to perform other work at or adjacent to the Site with Owner's employees, or to arrange to have utility owners perform work at or adjacent to the Site, the following will be set forth in the Supplementary Conditions or provided to Contractor prior to the start of any such other work:

1. the identity of the individual or entity that will have authority and responsibility for coordination of the activities among the various contractors;

2. an itemization of the specific matters to be covered by such authority and responsibility; and

3. the extent of such authority and responsibilities.

B. Unless otherwise provided in the Supplementary Conditions, Owner shall have sole authority and responsibility for such coordination.

8.03 *Legal Relationships*

A. If, in the course of performing other work at or adjacent to the Site for Owner, the Owner's employees, any other contractor working for Owner, or any utility owner causes damage to the Work or to the property of Contractor or its Subcontractors, or delays, disrupts, interferes with, or increases the scope or cost of the performance of the Work, through actions or inaction, then Contractor shall be entitled to an equitable adjustment in the Contract Price or the Contract Times, or both. Contractor must submit any Change Proposal seeking an equitable adjustment in the Contract Price or the Contract Times under this paragraph within 30 days of the damaging, delaying, disrupting, or interfering event. The entitlement to, and extent of, any such equitable adjustment shall take into account information (if any) regarding such other work that was provided to Contractor in the Contract Documents prior to the submittal of the Bid or the final negotiation of the terms of the Contract. When applicable, any such equitable adjustment in Contract Price shall be conditioned on Contractor assigning to Owner all Contractor's rights against such other contractor or utility owner with respect to the damage, delay, disruption, or interference that is the subject of the adjustment. Contractor's entitlement to an adjustment of the Contract Times is conditioned on such adjustment being essential to Contractor's ability to complete the Work within the Contract Times.

B. Contractor shall take reasonable and customary measures to avoid damaging, delaying, disrupting, or interfering with the work of Owner, any other contractor, or any utility owner performing other work at or adjacent to the Site. If Contractor fails to take such measures and as a result damages, delays, disrupts, or interferes with the work of any such other contractor or utility owner, then Owner may impose a set-off against payments due to Contractor, and assign to such other contractor or utility owner the Owner's contractual rights against Contractor with respect to the breach of the obligations set forth in this paragraph.

C. When Owner is performing other work at or adjacent to the Site with Owner's employees, Contractor shall be liable to Owner for damage to such other work, and for the reasonable direct delay, disruption, and interference costs incurred by Owner as a result of Contractor's failure to take reasonable and customary measures with respect to Owner's other work. In response to such damage, delay, disruption, or interference, Owner may impose a set-off against payments due to Contractor.

D. If Contractor damages, delays, disrupts, or interferes with the work of any other contractor, or any utility owner performing other work at or adjacent to the Site, through Contractor's failure to take reasonable and customary measures to avoid such impacts, or if any claim arising out of Contractor's actions, inactions, or negligence in performance of the Work at or adjacent to the Site is made by any such other contractor or utility owner against Contractor, Owner, or Engineer, then Contractor shall (1) promptly attempt to settle the claim as to all parties through negotiations with such other contractor or utility owner, or otherwise resolve the claim by arbitration or other dispute resolution proceeding or at law, and (2) indemnify and hold harmless Owner and Engineer, and the officers, directors, members, partners, employees, agents, consultants and subcontractors of each and any of them from and against any such claims, and against all costs, losses, and damages (including but not limited to all fees and charges of engineers, architects, attorneys, and other professionals and all court or arbitration or other dispute resolution costs) arising out of or relating to such damage, delay, disruption, or interference.

ARTICLE 9 – OWNER'S RESPONSIBILITIES

9.01 *Communications to Contractor*

A. Except as otherwise provided in these General Conditions, Owner shall issue all communications to Contractor through Engineer.

9.02 *Replacement of Engineer*

A. Owner may at its discretion appoint an engineer to replace Engineer, provided Contractor makes no reasonable objection to the replacement engineer. The replacement engineer's status under the Contract Documents shall be that of the former Engineer.

9.03 *Furnish Data*

A. Owner shall promptly furnish the data required of Owner under the Contract Documents.

9.04 *Pay When Due*

A. Owner shall make payments to Contractor when they are due as provided in the Agreement.

9.05 *Lands and Easements; Reports, Tests, and Drawings*

A. Owner's duties with respect to providing lands and easements are set forth in Paragraph 5.01.

B. Owner's duties with respect to providing engineering surveys to establish reference points are set forth in Paragraph 4.03.

C. Article 5 refers to Owner's identifying and making available to Contractor copies of reports of explorations and tests of conditions at the Site, and drawings of physical conditions relating to existing surface or subsurface structures at the Site.

9.06 *Insurance*

A. Owner's responsibilities, if any, with respect to purchasing and maintaining liability and property insurance are set forth in Article 6.

9.07 *Change Orders*

A. Owner's responsibilities with respect to Change Orders are set forth in Article 11.

9.08 *Inspections, Tests, and Approvals*

A. Owner's responsibility with respect to certain inspections, tests, and approvals is set forth in Paragraph 14.02.B.

9.09 *Limitations on Owner's Responsibilities*

A. The Owner shall not supervise, direct, or have control or authority over, nor be responsible for, Contractor's means, methods, techniques, sequences, or procedures of construction, or the safety precautions and programs incident thereto, or for any failure of Contractor to comply with Laws and Regulations applicable to the performance of the Work. Owner will not be responsible for Contractor's failure to perform the Work in accordance with the Contract Documents.

9.10 *Undisclosed Hazardous Environmental Condition*

A. Owner's responsibility in respect to an undisclosed Hazardous Environmental Condition is set forth in Paragraph 5.06.

9.11 *Evidence of Financial Arrangements*

A. Upon request of Contractor, Owner shall furnish Contractor reasonable evidence that financial arrangements have been made to satisfy Owner's obligations under the Contract Documents (including obligations under proposed changes in the Work).

9.12 *Safety Programs*

A. While at the Site, Owner's employees and representatives shall comply with the specific applicable requirements of Contractor's safety programs of which Owner has been informed.

B. Owner shall furnish copies of any applicable Owner safety programs to Contractor.

ARTICLE 10 – ENGINEER'S STATUS DURING CONSTRUCTION

10.01 *Owner's Representative*

A. Engineer will be Owner's representative during the construction period. The duties and responsibilities and the limitations of authority of Engineer as Owner's representative during construction are set forth in the Contract.

10.02 *Visits to Site*

A. Engineer will make visits to the Site at intervals appropriate to the various stages of construction as Engineer deems necessary in order to observe as an experienced and qualified design professional the progress that has been made and the quality of the various aspects of Contractor's executed Work. Based on information obtained during such visits and observations, Engineer, for the benefit of Owner, will determine, in general, if the Work is proceeding in accordance with the Contract Documents. Engineer will not be required to make exhaustive or continuous inspections on the Site to check the quality or quantity of the Work. Engineer's efforts will be directed toward providing for Owner a greater degree of confidence that the completed Work will conform generally to the Contract Documents. On the basis of such visits and observations, Engineer will keep Owner informed of the progress of the Work and will endeavor to guard Owner against defective Work.

B. Engineer's visits and observations are subject to all the limitations on Engineer's authority and responsibility set forth in Paragraph 10.08. Particularly, but without limitation, during or as a result of Engineer's visits or observations of Contractor's Work, Engineer will not supervise, direct, control, or have authority over or be responsible for Contractor's means, methods, techniques, sequences, or procedures of construction, or the safety precautions and programs incident thereto, or for any failure of Contractor to comply with Laws and Regulations applicable to the performance of the Work.

10.03 *Project Representative*

A. If Owner and Engineer have agreed that Engineer will furnish a Resident Project Representative to represent Engineer at the Site and assist Engineer in observing the progress

and quality of the Work, then the authority and responsibilities of any such Resident Project Representative will be as provided in the Supplementary Conditions, and limitations on the responsibilities thereof will be as provided in Paragraph 10.08. If Owner designates another representative or agent to represent Owner at the Site who is not Engineer's consultant, agent, or employee, the responsibilities and authority and limitations thereon of such other individual or entity will be as provided in the Supplementary Conditions.

10.04 *Rejecting Defective Work*

A. Engineer has the authority to reject Work in accordance with Article 14.

10.05 *Shop Drawings, Change Orders and Payments*

A. Engineer's authority, and limitations thereof, as to Shop Drawings and Samples, are set forth in Paragraph 7.16.

B. Engineer's authority, and limitations thereof, as to design calculations and design drawings submitted in response to a delegation of professional design services, if any, are set forth in Paragraph 7.19.

C. Engineer's authority as to Change Orders is set forth in Article 11.

D. Engineer's authority as to Applications for Payment is set forth in Article 15.

10.06 *Determinations for Unit Price Work*

A. Engineer will determine the actual quantities and classifications of Unit Price Work performed by Contractor as set forth in Paragraph 13.03.

10.07 *Decisions on Requirements of Contract Documents and Acceptability of Work*

A. Engineer will render decisions regarding the requirements of the Contract Documents, and judge the acceptability of the Work, pursuant to the specific procedures set forth herein for initial interpretations, Change Proposals, and acceptance of the Work. In rendering such decisions and judgments, Engineer will not show partiality to Owner or Contractor, and will not be liable to Owner, Contractor, or others in connection with any proceedings, interpretations, decisions, or judgments conducted or rendered in good faith.

10.08 *Limitations on Engineer's Authority and Responsibilities*

A. Neither Engineer's authority or responsibility under this Article 10 or under any other provision of the Contract, nor any decision made by Engineer in good faith either to exercise or not exercise such authority or responsibility or the undertaking, exercise, or performance of any authority or responsibility by Engineer, shall create, impose, or give rise to any duty in contract, tort, or otherwise owed by Engineer to Contractor, any Subcontractor, any Supplier, any other individual or entity, or to any surety for or employee or agent of any of them.

B. Engineer will not supervise, direct, control, or have authority over or be responsible for Contractor's means, methods, techniques, sequences, or procedures of construction, or the safety precautions and programs incident thereto, or for any failure of Contractor to comply with Laws and Regulations applicable to the performance of the Work. Engineer will not be responsible for Contractor's failure to perform the Work in accordance with the Contract Documents.

C. Engineer will not be responsible for the acts or omissions of Contractor or of any Subcontractor, any Supplier, or of any other individual or entity performing any of the Work.

D. Engineer's review of the final Application for Payment and accompanying documentation and all maintenance and operating instructions, schedules, guarantees, bonds, certificates of inspection, tests and approvals, and other documentation required to be delivered by Paragraph 15.06.A will only be to determine generally that their content complies with the

requirements of, and in the case of certificates of inspections, tests, and approvals, that the results certified indicate compliance with the Contract Documents.

E. The limitations upon authority and responsibility set forth in this Paragraph 10.08 shall also apply to the Resident Project Representative, if any.

10.09 *Compliance with Safety Program*

A. While at the Site, Engineer's employees and representatives will comply with the specific applicable requirements of Owner's and Contractor's safety programs (if any) of which Engineer has been informed.

ARTICLE 11 – AMENDING THE CONTRACT DOCUMENTS; CHANGES IN THE WORK

11.01 *Amending and Supplementing Contract Documents*

A. The Contract Documents may be amended or supplemented by a Change Order, a Work Change Directive, or a Field Order.

1. *Change Orders*:

a. If an amendment or supplement to the Contract Documents includes a change in the Contract Price or the Contract Times, such amendment or supplement must be set forth in a Change Order. A Change Order also may be used to establish amendments and supplements of the Contract Documents that do not affect the Contract Price or Contract Times.

b. Owner and Contractor may amend those terms and conditions of the Contract Documents that do not involve (1) the performance or acceptability of the Work, (2) the design (as set forth in the Drawings, Specifications, or otherwise), or (3) other engineering or technical matters, without the recommendation of the Engineer. Such an amendment shall be set forth in a Change Order.

2. *Work Change Directives*: A Work Change Directive will not change the Contract Price or the Contract Times but is evidence that the parties expect that the modification ordered or documented by a Work Change Directive will be incorporated in a subsequently issued Change Order, following negotiations by the parties as to the Work Change Directive's effect, if any, on the Contract Price and Contract Times; or, if negotiations are unsuccessful, by a determination under the terms of the Contract Documents governing adjustments, expressly including Paragraph 11.04 regarding change of Contract Price. Contractor must submit any Change Proposal seeking an adjustment of the Contract Price or the Contract Times, or both, no later than 30 days after the completion of the Work set out in the Work Change Directive. Owner must submit any Claim seeking an adjustment of the Contract Price or the Contract Times, or both, no later than 60 days after issuance of the Work Change Directive.

3. *Field Orders*: Engineer may authorize minor changes in the Work if the changes do not involve an adjustment in the Contract Price or the Contract Times and are compatible with the design concept of the completed Project as a functioning whole as indicated by the Contract Documents. Such changes will be accomplished by a Field Order and will be binding on Owner and also on Contractor, which shall perform the Work involved promptly. If Contractor believes that a Field Order justifies an adjustment in the Contract Price or Contract Times, or both, then before proceeding with the Work at issue, Contractor shall submit a Change Proposal as provided herein.

11.02 *Owner-Authorized Changes in the Work*

A. Without invalidating the Contract and without notice to any surety, Owner may, at any time or from time to time, order additions, deletions, or revisions in the Work. Such changes shall

be supported by Engineer's recommendation, to the extent the change involves the design (as set forth in the Drawings, Specifications, or otherwise), or other engineering or technical matters. Such changes may be accomplished by a Change Order, if Owner and Contractor have agreed as to the effect, if any, of the changes on Contract Times or Contract Price; or by a Work Change Directive. Upon receipt of any such document, Contractor shall promptly proceed with the Work involved; or, in the case of a deletion in the Work, promptly cease construction activities with respect to such deleted Work. Added or revised Work shall be performed under the applicable conditions of the Contract Documents. Nothing in this paragraph shall obligate Contractor to undertake work that Contractor reasonably concludes cannot be performed in a manner consistent with Contractor's safety obligations under the Contract Documents or Laws and Regulations.

11.03 *Unauthorized Changes in the Work*

A. Contractor shall not be entitled to an increase in the Contract Price or an extension of the Contract Times with respect to any work performed that is not required by the Contract Documents, as amended, modified, or supplemented, except in the case of an emergency as provided in Paragraph 7.15 or in the case of uncovering Work as provided in Paragraph 14.05.

11.04 *Change of Contract Price*

A. The Contract Price may only be changed by a Change Order. Any Change Proposal for an adjustment in the Contract Price shall comply with the provisions of Paragraph 11.06. Any Claim for an adjustment of Contract Price shall comply with the provisions of Article 12.

B. An adjustment in the Contract Price will be determined as follows:

1. where the Work involved is covered by unit prices contained in the Contract Documents, then by application of such unit prices to the quantities of the items involved (subject to the provisions of Paragraph 13.03); or

2. where the Work involved is not covered by unit prices contained in the Contract Documents, then by a mutually agreed lump sum (which may include an allowance for overhead and profit not necessarily in accordance with Paragraph 11.04.C.2); or

3. where the Work involved is not covered by unit prices contained in the Contract Documents and the parties do not reach mutual agreement to a lump sum, then on the basis of the Cost of the Work (determined as provided in Paragraph 13.01) plus a Contractor's fee for overhead and profit (determined as provided in Paragraph 11.04.C).

C. *Contractor's Fee*: When applicable, the Contractor's fee for overhead and profit shall be determined as follows:

1. a mutually acceptable fixed fee; or

2. if a fixed fee is not agreed upon, then a fee based on the following percentages of the various portions of the Cost of the Work:

a. for costs incurred under Paragraphs 13.01.B.1 and 13.01.B.2, the Contractor's fee shall be 15 percent;

b. for costs incurred under Paragraph 13.01.B.3, the Contractor's fee shall be five percent;

c. where one or more tiers of subcontracts are on the basis of Cost of the Work plus a fee and no fixed fee is agreed upon, the intent of Paragraphs 11.01.C.2.a and 11.01.C.2.b is that the Contractor's fee shall be based on: (1) a fee of 15 percent of the costs incurred under Paragraphs 13.01.A.1 and 13.01.A.2 by the Subcontractor that actually performs the Work, at whatever tier, and (2) with respect to Contractor itself and to any Subcontractors of a tier higher than that of the

Subcontractor that actually performs the Work, a fee of five percent of the amount (fee plus underlying costs incurred) attributable to the next lower tier Subcontractor; provided, however, that for any such subcontracted work the maximum total fee to be paid by Owner shall be no greater than 27 percent of the costs incurred by the Subcontractor that actually performs the work;

d. no fee shall be payable on the basis of costs itemized under Paragraphs 13.01.B.4, 13.01.B.5, and 13.01.C;

e. the amount of credit to be allowed by Contractor to Owner for any change which results in a net decrease in cost will be the amount of the actual net decrease in cost plus a deduction in Contractor's fee by an amount equal to five percent of such net decrease; and

f. when both additions and credits are involved in any one change, the adjustment in Contractor's fee shall be computed on the basis of the net change in accordance with Paragraphs 11.04.C.2.a through 11.04.C.2.e, inclusive.

11.05 *Change of Contract Times*

A. The Contract Times may only be changed by a Change Order. Any Change Proposal for an adjustment in the Contract Times shall comply with the provisions of Paragraph 11.06. Any Claim for an adjustment in the Contract Times shall comply with the provisions of Article 12.

B. An adjustment of the Contract Times shall be subject to the limitations set forth in Paragraph 4.05, concerning delays in Contractor's progress.

11.06 *Change Proposals*

A. Contractor shall submit a Change Proposal to Engineer to request an adjustment in the Contract Times or Contract Price; appeal an initial decision by Engineer concerning the requirements of the Contract Documents or relating to the acceptability of the Work under the Contract Documents; contest a set-off against payment due; or seek other relief under the Contract. The Change Proposal shall specify any proposed change in Contract Times or Contract Price, or both, or other proposed relief, and explain the reason for the proposed change, with citations to any governing or applicable provisions of the Contract Documents.

1. *Procedures*: Contractor shall submit each Change Proposal to Engineer promptly (but in no event later than 30 days) after the start of the event giving rise thereto, or after such initial decision. The Contractor shall submit supporting data, including the proposed change in Contract Price or Contract Time (if any), to the Engineer and Owner within 15 days after the submittal of the Change Proposal. The supporting data shall be accompanied by a written statement that the supporting data are accurate and complete, and that any requested time or price adjustment is the entire adjustment to which Contractor believes it is entitled as a result of said event. Engineer will advise Owner regarding the Change Proposal, and consider any comments or response from Owner regarding the Change Proposal.

2. *Engineer's Action*: Engineer will review each Change Proposal and, within 30 days after receipt of the Contractor's supporting data, either deny the Change Proposal in whole, approve it in whole, or deny it in part and approve it in part. Such actions shall be in writing, with a copy provided to Owner and Contractor. If Engineer does not take action on the Change Proposal within 30 days, then either Owner or Contractor may at any time thereafter submit a letter to the other party indicating that as a result of Engineer's inaction the Change Proposal is deemed denied, thereby commencing the time for appeal of the denial under Article 12.

3. *Binding Decision*: Engineer's decision will be final and binding upon Owner and Contractor, unless Owner or Contractor appeals the decision by filing a Claim under Article 12.

B. *Resolution of Certain Change Proposals*: If the Change Proposal does not involve the design (as set forth in the Drawings, Specifications, or otherwise), the acceptability of the Work, or other engineering or technical matters, then Engineer will notify the parties that the Engineer is unable to resolve the Change Proposal. For purposes of further resolution of such a Change Proposal, such notice shall be deemed a denial, and Contractor may choose to seek resolution under the terms of Article 12.

11.07 *Execution of Change Orders*

A. Owner and Contractor shall execute appropriate Change Orders covering:

1. changes in the Contract Price or Contract Times which are agreed to by the parties, including any undisputed sum or amount of time for Work actually performed in accordance with a Work Change Directive;

2. changes in Contract Price resulting from an Owner set-off, unless Contractor has duly contested such set-off;

3. changes in the Work which are: (a) ordered by Owner pursuant to Paragraph 11.02, (b) required because of Owner's acceptance of defective Work under Paragraph 14.04 or Owner's correction of defective Work under Paragraph 14.07, or (c) agreed to by the parties, subject to the need for Engineer's recommendation if the change in the Work involves the design (as set forth in the Drawings, Specifications, or otherwise), or other engineering or technical matters; and

4. changes in the Contract Price or Contract Times, or other changes, which embody the substance of any final and binding results under Paragraph 11.06, or Article 12.

B. If Owner or Contractor refuses to execute a Change Order that is required to be executed under the terms of this Paragraph 11.07, it shall be deemed to be of full force and effect, as if fully executed.

11.08 *Notification to Surety*

A. If the provisions of any bond require notice to be given to a surety of any change affecting the general scope of the Work or the provisions of the Contract Documents (including, but not limited to, Contract Price or Contract Times), the giving of any such notice will be Contractor's responsibility. The amount of each applicable bond will be adjusted to reflect the effect of any such change.

ARTICLE 12 – CLAIMS

12.01 *Claims*

A. *Claims Process*: The following disputes between Owner and Contractor shall be submitted to the Claims process set forth in this Article:

1. Appeals by Owner or Contractor of Engineer's decisions regarding Change Proposals;

2. Owner demands for adjustments in the Contract Price or Contract Times, or other relief under the Contract Documents; and

3. Disputes that Engineer has been unable to address because they do not involve the design (as set forth in the Drawings, Specifications, or otherwise), the acceptability of the Work, or other engineering or technical matters.

B. *Submittal of Claim*: The party submitting a Claim shall deliver it directly to the other party to the Contract promptly (but in no event later than 30 days) after the start of the event giving rise thereto; in the case of appeals regarding Change Proposals within 30 days of the decision under appeal. The party submitting the Claim shall also furnish a copy to the Engineer, for its information only. The responsibility to substantiate a Claim shall rest with the party making the Claim. In the case of a Claim by Contractor seeking an increase in the Contract Times or Contract Price, or both, Contractor shall certify that the Claim is made in good faith, that the supporting data are accurate and complete, and that to the best of Contractor's knowledge and belief the amount of time or money requested accurately reflects the full amount to which Contractor is entitled.

C. *Review and Resolution*: The party receiving a Claim shall review it thoroughly, giving full consideration to its merits. The two parties shall seek to resolve the Claim through the exchange of information and direct negotiations. The parties may extend the time for resolving the Claim by mutual agreement. All actions taken on a Claim shall be stated in writing and submitted to the other party, with a copy to Engineer.

D. *Mediation*:

1. At any time after initiation of a Claim, Owner and Contractor may mutually agree to mediation of the underlying dispute. The agreement to mediate shall stay the Claim submittal and response process.

2. If Owner and Contractor agree to mediation, then after 60 days from such agreement, either Owner or Contractor may unilaterally terminate the mediation process, and the Claim submittal and decision process shall resume as of the date of the termination. If the mediation proceeds but is unsuccessful in resolving the dispute, the Claim submittal and decision process shall resume as of the date of the conclusion of the mediation, as determined by the mediator.

3. Owner and Contractor shall each pay one-half of the mediator's fees and costs.

E. *Partial Approval*: If the party receiving a Claim approves the Claim in part and denies it in part, such action shall be final and binding unless within 30 days of such action the other party invokes the procedure set forth in Article 17 for final resolution of disputes.

F. *Denial of Claim*: If efforts to resolve a Claim are not successful, the party receiving the Claim may deny it by giving written notice of denial to the other party. If the receiving party does not take action on the Claim within 90 days, then either Owner or Contractor may at any time thereafter submit a letter to the other party indicating that as a result of the inaction, the Claim is deemed denied, thereby commencing the time for appeal of the denial. A denial of the Claim shall be final and binding unless within 30 days of the denial the other party invokes the procedure set forth in Article 17 for the final resolution of disputes.

G. *Final and Binding Results*: If the parties reach a mutual agreement regarding a Claim, whether through approval of the Claim, direct negotiations, mediation, or otherwise; or if a Claim is approved in part and denied in part, or denied in full, and such actions become final and binding; then the results of the agreement or action on the Claim shall be incorporated in a Change Order to the extent they affect the Contract, including the Work, the Contract Times, or the Contract Price.

ARTICLE 13 – COST OF THE WORK; ALLOWANCES; UNIT PRICE WORK

13.01 *Cost of the Work*

A. *Purposes for Determination of Cost of the Work*: The term Cost of the Work means the sum of all costs necessary for the proper performance of the Work at issue, as further defined below. The provisions of this Paragraph 13.01 are used for two distinct purposes:

1. To determine Cost of the Work when Cost of the Work is a component of the Contract Price, under cost-plus-fee, time-and-materials, or other cost-based terms; or

2. To determine the value of a Change Order, Change Proposal, Claim, set-off, or other adjustment in Contract Price. When the value of any such adjustment is determined on the basis of Cost of the Work, Contractor is entitled only to those additional or incremental costs required because of the change in the Work or because of the event giving rise to the adjustment.

B. *Costs Included*: Except as otherwise may be agreed to in writing by Owner, costs included in the Cost of the Work shall be in amounts no higher than those prevailing in the locality of the Project, shall not include any of the costs itemized in Paragraph 13.01.C, and shall include only the following items:

1. Payroll costs for employees in the direct employ of Contractor in the performance of the Work under schedules of job classifications agreed upon by Owner and Contractor. Such employees shall include, without limitation, superintendents, foremen, and other personnel employed full time on the Work. Payroll costs for employees not employed full time on the Work shall be apportioned on the basis of their time spent on the Work. Payroll costs shall include, but not be limited to, salaries and wages plus the cost of fringe benefits, which shall include social security contributions, unemployment, excise, and payroll taxes, workers' compensation, health and retirement benefits, bonuses, sick leave, and vacation and holiday pay applicable thereto. The expenses of performing Work outside of regular working hours, on Saturday, Sunday, or legal holidays, shall be included in the above to the extent authorized by Owner.

2. Cost of all materials and equipment furnished and incorporated in the Work, including costs of transportation and storage thereof, and Suppliers' field services required in connection therewith. All cash discounts shall accrue to Contractor unless Owner deposits funds with Contractor with which to make payments, in which case the cash discounts shall accrue to Owner. All trade discounts, rebates, and refunds and returns from sale of surplus materials and equipment shall accrue to Owner, and Contractor shall make provisions so that they may be obtained.

3. Payments made by Contractor to Subcontractors for Work performed by Subcontractors. If required by Owner, Contractor shall obtain competitive bids from subcontractors acceptable to Owner and Contractor and shall deliver such bids to Owner, who will then determine, with the advice of Engineer, which bids, if any, will be acceptable. If any subcontract provides that the Subcontractor is to be paid on the basis of Cost of the Work plus a fee, the Subcontractor's Cost of the Work and fee shall be determined in the same manner as Contractor's Cost of the Work and fee as provided in this Paragraph 13.01.

4. Costs of special consultants (including but not limited to engineers, architects, testing laboratories, surveyors, attorneys, and accountants) employed for services specifically related to the Work.

5. Supplemental costs including the following:

   a. The proportion of necessary transportation, travel, and subsistence expenses of Contractor's employees incurred in discharge of duties connected with the Work.

   b. Cost, including transportation and maintenance, of all materials, supplies, equipment, machinery, appliances, office, and temporary facilities at the Site, and hand tools not owned by the workers, which are consumed in the performance of the Work, and cost, less market value, of such items used but not consumed which remain the property of Contractor.

c. Rentals of all construction equipment and machinery, and the parts thereof, whether rented from Contractor or others in accordance with rental agreements approved by Owner with the advice of Engineer, and the costs of transportation, loading, unloading, assembly, dismantling, and removal thereof. All such costs shall be in accordance with the terms of said rental agreements. The rental of any such equipment, machinery, or parts shall cease when the use thereof is no longer necessary for the Work.

d. Sales, consumer, use, and other similar taxes related to the Work, and for which Contractor is liable, as imposed by Laws and Regulations.

e. Deposits lost for causes other than negligence of Contractor, any Subcontractor, or anyone directly or indirectly employed by any of them or for whose acts any of them may be liable, and royalty payments and fees for permits and licenses.

f. Losses and damages (and related expenses) caused by damage to the Work, not compensated by insurance or otherwise, sustained by Contractor in connection with the performance of the Work (except losses and damages within the deductible amounts of property insurance established in accordance with Paragraph 6.05), provided such losses and damages have resulted from causes other than the negligence of Contractor, any Subcontractor, or anyone directly or indirectly employed by any of them or for whose acts any of them may be liable. Such losses shall include settlements made with the written consent and approval of Owner. No such losses, damages, and expenses shall be included in the Cost of the Work for the purpose of determining Contractor's fee.

g. The cost of utilities, fuel, and sanitary facilities at the Site.

h. Minor expenses such as communication service at the Site, express and courier services, and similar petty cash items in connection with the Work.

i. The costs of premiums for all bonds and insurance that Contractor is required by the Contract Documents to purchase and maintain.

C. *Costs Excluded*: The term Cost of the Work shall not include any of the following items:

1. Payroll costs and other compensation of Contractor's officers, executives, principals (of partnerships and sole proprietorships), general managers, safety managers, engineers, architects, estimators, attorneys, auditors, accountants, purchasing and contracting agents, expediters, timekeepers, clerks, and other personnel employed by Contractor, whether at the Site or in Contractor's principal or branch office for general administration of the Work and not specifically included in the agreed upon schedule of job classifications referred to in Paragraph 13.01.B.1 or specifically covered by Paragraph 13.01.B.4. The payroll costs and other compensation excluded here are to be considered administrative costs covered by the Contractor's fee.

2. Expenses of Contractor's principal and branch offices other than Contractor's office at the Site.

3. Any part of Contractor's capital expenses, including interest on Contractor's capital employed for the Work and charges against Contractor for delinquent payments.

4. Costs due to the negligence of Contractor, any Subcontractor, or anyone directly or indirectly employed by any of them or for whose acts any of them may be liable, including but not limited to, the correction of defective Work, disposal of materials or equipment wrongly supplied, and making good any damage to property.

5. Other overhead or general expense costs of any kind and the costs of any item not specifically and expressly included in Paragraph 13.01.B.

D. *Contractor's Fee*: When the Work as a whole is performed on the basis of cost-plus, Contractor's fee shall be determined as set forth in the Agreement. When the value of any Work covered by a Change Order, Change Proposal, Claim, set-off, or other adjustment in Contract Price is determined on the basis of Cost of the Work, Contractor's fee shall be determined as set forth in Paragraph 11.04.C.

E. *Documentation*: Whenever the Cost of the Work for any purpose is to be determined pursuant to this Article 13, Contractor will establish and maintain records thereof in accordance with generally accepted accounting practices and submit in a form acceptable to Engineer an itemized cost breakdown together with supporting data.

13.02 *Allowances*

A. It is understood that Contractor has included in the Contract Price all allowances so named in the Contract Documents and shall cause the Work so covered to be performed for such sums and by such persons or entities as may be acceptable to Owner and Engineer.

B. *Cash Allowances*: Contractor agrees that:

1. the cash allowances include the cost to Contractor (less any applicable trade discounts) of materials and equipment required by the allowances to be delivered at the Site, and all applicable taxes; and

2. Contractor's costs for unloading and handling on the Site, labor, installation, overhead, profit, and other expenses contemplated for the cash allowances have been included in the Contract Price and not in the allowances, and no demand for additional payment on account of any of the foregoing will be valid.

C. *Contingency Allowance*: Contractor agrees that a contingency allowance, if any, is for the sole use of Owner to cover unanticipated costs.

D. Prior to final payment, an appropriate Change Order will be issued as recommended by Engineer to reflect actual amounts due Contractor on account of Work covered by allowances, and the Contract Price shall be correspondingly adjusted.

13.03 *Unit Price Work*

A. Where the Contract Documents provide that all or part of the Work is to be Unit Price Work, initially the Contract Price will be deemed to include for all Unit Price Work an amount equal to the sum of the unit price for each separately identified item of Unit Price Work times the estimated quantity of each item as indicated in the Agreement.

B. The estimated quantities of items of Unit Price Work are not guaranteed and are solely for the purpose of comparison of Bids and determining an initial Contract Price. Payments to Contractor for Unit Price Work will be based on actual quantities.

C. Each unit price will be deemed to include an amount considered by Contractor to be adequate to cover Contractor's overhead and profit for each separately identified item.

D. Engineer will determine the actual quantities and classifications of Unit Price Work performed by Contractor. Engineer will review with Contractor the Engineer's preliminary determinations on such matters before rendering a written decision thereon (by recommendation of an Application for Payment or otherwise). Engineer's written decision thereon will be final and binding (except as modified by Engineer to reflect changed factual conditions or more accurate data) upon Owner and Contractor, subject to the provisions of the following paragraph.

E. Within 30 days of Engineer's written decision under the preceding paragraph, Contractor may submit a Change Proposal, or Owner may file a Claim, seeking an adjustment in the Contract Price if:

1. the quantity of any item of Unit Price Work performed by Contractor differs materially and significantly from the estimated quantity of such item indicated in the Agreement;

2. there is no corresponding adjustment with respect to any other item of Work; and

3. Contractor believes that it is entitled to an increase in Contract Price as a result of having incurred additional expense or Owner believes that Owner is entitled to a decrease in Contract Price, and the parties are unable to agree as to the amount of any such increase or decrease.

ARTICLE 14 – TESTS AND INSPECTIONS; CORRECTION, REMOVAL OR ACCEPTANCE OF DEFECTIVE WORK

14.01 *Access to Work*

A. Owner, Engineer, their consultants and other representatives and personnel of Owner, independent testing laboratories, and authorities having jurisdiction will have access to the Site and the Work at reasonable times for their observation, inspection, and testing. Contractor shall provide them proper and safe conditions for such access and advise them of Contractor's safety procedures and programs so that they may comply therewith as applicable.

14.02 *Tests, Inspections, and Approvals*

A. Contractor shall give Engineer timely notice of readiness of the Work (or specific parts thereof) for all required inspections and tests, and shall cooperate with inspection and testing personnel to facilitate required inspections and tests.

B. Owner shall retain and pay for the services of an independent inspector, testing laboratory, or other qualified individual or entity to perform all inspections and tests expressly required by the Contract Documents to be furnished and paid for by Owner, except that costs incurred in connection with tests or inspections of covered Work shall be governed by the provisions of Paragraph 14.05.

C. If Laws or Regulations of any public body having jurisdiction require any Work (or part thereof) specifically to be inspected, tested, or approved by an employee or other representative of such public body, Contractor shall assume full responsibility for arranging and obtaining such inspections, tests, or approvals, pay all costs in connection therewith, and furnish Engineer the required certificates of inspection or approval.

D. Contractor shall be responsible for arranging, obtaining, and paying for all inspections and tests required:

1. by the Contract Documents, unless the Contract Documents expressly allocate responsibility for a specific inspection or test to Owner;

2. to attain Owner's and Engineer's acceptance of materials or equipment to be incorporated in the Work;

3. by manufacturers of equipment furnished under the Contract Documents;

4. for testing, adjusting, and balancing of mechanical, electrical, and other equipment to be incorporated into the Work; and

5. for acceptance of materials, mix designs, or equipment submitted for approval prior to Contractor's purchase thereof for incorporation in the Work.

Such inspections and tests shall be performed by independent inspectors, testing laboratories, or other qualified individuals or entities acceptable to Owner and Engineer.

E. If the Contract Documents require the Work (or part thereof) to be approved by Owner, Engineer, or another designated individual or entity, then Contractor shall assume full responsibility for arranging and obtaining such approvals.

F. If any Work (or the work of others) that is to be inspected, tested, or approved is covered by Contractor without written concurrence of Engineer, Contractor shall, if requested by Engineer, uncover such Work for observation. Such uncovering shall be at Contractor's expense unless Contractor had given Engineer timely notice of Contractor's intention to cover the same and Engineer had not acted with reasonable promptness in response to such notice.

14.03 *Defective Work*

A. *Contractor's Obligation*: It is Contractor's obligation to assure that the Work is not defective.

B. *Engineer's Authority*: Engineer has the authority to determine whether Work is defective, and to reject defective Work.

C. *Notice of Defects*: Prompt notice of all defective Work of which Owner or Engineer has actual knowledge will be given to Contractor.

D. *Correction, or Removal and Replacement*: Promptly after receipt of written notice of defective Work, Contractor shall correct all such defective Work, whether or not fabricated, installed, or completed, or, if Engineer has rejected the defective Work, remove it from the Project and replace it with Work that is not defective.

E. *Preservation of Warranties*: When correcting defective Work, Contractor shall take no action that would void or otherwise impair Owner's special warranty and guarantee, if any, on said Work.

F. *Costs and Damages*: In addition to its correction, removal, and replacement obligations with respect to defective Work, Contractor shall pay all claims, costs, losses, and damages arising out of or relating to defective Work, including but not limited to the cost of the inspection, testing, correction, removal, replacement, or reconstruction of such defective Work, fines levied against Owner by governmental authorities because the Work is defective, and the costs of repair or replacement of work of others resulting from defective Work. Prior to final payment, if Owner and Contractor are unable to agree as to the measure of such claims, costs, losses, and damages resulting from defective Work, then Owner may impose a reasonable set-off against payments due under Article 15.

14.04 *Acceptance of Defective Work*

A. If, instead of requiring correction or removal and replacement of defective Work, Owner prefers to accept it, Owner may do so (subject, if such acceptance occurs prior to final payment, to Engineer's confirmation that such acceptance is in general accord with the design intent and applicable engineering principles, and will not endanger public safety). Contractor shall pay all claims, costs, losses, and damages attributable to Owner's evaluation of and determination to accept such defective Work (such costs to be approved by Engineer as to reasonableness), and for the diminished value of the Work to the extent not otherwise paid by Contractor. If any such acceptance occurs prior to final payment, the necessary revisions in the Contract Documents with respect to the Work shall be incorporated in a Change Order. If the parties are unable to agree as to the decrease in the Contract Price, reflecting the diminished value of Work so accepted, then Owner may impose a reasonable set-off against payments due under Article 15. If the acceptance of defective Work occurs after final payment, Contractor shall pay an appropriate amount to Owner.

14.05 *Uncovering Work*

A. Engineer has the authority to require special inspection or testing of the Work, whether or not the Work is fabricated, installed, or completed.

B. If any Work is covered contrary to the written request of Engineer, then Contractor shall, if requested by Engineer, uncover such Work for Engineer's observation, and then replace the covering, all at Contractor's expense.

C. If Engineer considers it necessary or advisable that covered Work be observed by Engineer or inspected or tested by others, then Contractor, at Engineer's request, shall uncover, expose, or otherwise make available for observation, inspection, or testing as Engineer may require, that portion of the Work in question, and provide all necessary labor, material, and equipment.

1. If it is found that the uncovered Work is defective, Contractor shall be responsible for all claims, costs, losses, and damages arising out of or relating to such uncovering, exposure, observation, inspection, and testing, and of satisfactory replacement or reconstruction (including but not limited to all costs of repair or replacement of work of others); and pending Contractor's full discharge of this responsibility the Owner shall be entitled to impose a reasonable set-off against payments due under Article 15.

2. If the uncovered Work is not found to be defective, Contractor shall be allowed an increase in the Contract Price or an extension of the Contract Times, or both, directly attributable to such uncovering, exposure, observation, inspection, testing, replacement, and reconstruction. If the parties are unable to agree as to the amount or extent thereof, then Contractor may submit a Change Proposal within 30 days of the determination that the Work is not defective.

14.06 *Owner May Stop the Work*

A. If the Work is defective, or Contractor fails to supply sufficient skilled workers or suitable materials or equipment, or fails to perform the Work in such a way that the completed Work will conform to the Contract Documents, then Owner may order Contractor to stop the Work, or any portion thereof, until the cause for such order has been eliminated; however, this right of Owner to stop the Work shall not give rise to any duty on the part of Owner to exercise this right for the benefit of Contractor, any Subcontractor, any Supplier, any other individual or entity, or any surety for, or employee or agent of any of them.

14.07 *Owner May Correct Defective Work*

A. If Contractor fails within a reasonable time after written notice from Engineer to correct defective Work, or to remove and replace rejected Work as required by Engineer, or if Contractor fails to perform the Work in accordance with the Contract Documents, or if Contractor fails to comply with any other provision of the Contract Documents, then Owner may, after seven days written notice to Contractor, correct or remedy any such deficiency.

B. In exercising the rights and remedies under this Paragraph 14.07, Owner shall proceed expeditiously. In connection with such corrective or remedial action, Owner may exclude Contractor from all or part of the Site, take possession of all or part of the Work and suspend Contractor's services related thereto, and incorporate in the Work all materials and equipment stored at the Site or for which Owner has paid Contractor but which are stored elsewhere. Contractor shall allow Owner, Owner's representatives, agents and employees, Owner's other contractors, and Engineer and Engineer's consultants access to the Site to enable Owner to exercise the rights and remedies under this paragraph.

C. All claims, costs, losses, and damages incurred or sustained by Owner in exercising the rights and remedies under this Paragraph 14.07 will be charged against Contractor as set-offs against payments due under Article 15. Such claims, costs, losses and damages will include

but not be limited to all costs of repair, or replacement of work of others destroyed or damaged by correction, removal, or replacement of Contractor's defective Work.

D. Contractor shall not be allowed an extension of the Contract Times because of any delay in the performance of the Work attributable to the exercise by Owner of Owner's rights and remedies under this Paragraph 14.07.

ARTICLE 15 – PAYMENTS TO CONTRACTOR; SET-OFFS; COMPLETION; CORRECTION PERIOD

15.01 *Progress Payments*

A. *Basis for Progress Payments*: The Schedule of Values established as provided in Article 2 will serve as the basis for progress payments and will be incorporated into a form of Application for Payment acceptable to Engineer. Progress payments on account of Unit Price Work will be based on the number of units completed during the pay period, as determined under the provisions of Paragraph 13.03. Progress payments for cost-based Work will be based on Cost of the Work completed by Contractor during the pay period.

B. *Applications for Payments*:

1. At least 20 days before the date established in the Agreement for each progress payment (but not more often than once a month), Contractor shall submit to Engineer for review an Application for Payment filled out and signed by Contractor covering the Work completed as of the date of the Application and accompanied by such supporting documentation as is required by the Contract Documents. If payment is requested on the basis of materials and equipment not incorporated in the Work but delivered and suitably stored at the Site or at another location agreed to in writing, the Application for Payment shall also be accompanied by a bill of sale, invoice, or other documentation warranting that Owner has received the materials and equipment free and clear of all Liens, and evidence that the materials and equipment are covered by appropriate property insurance, a warehouse bond, or other arrangements to protect Owner's interest therein, all of which must be satisfactory to Owner.

2. Beginning with the second Application for Payment, each Application shall include an affidavit of Contractor stating that all previous progress payments received on account of the Work have been applied on account to discharge Contractor's legitimate obligations associated with prior Applications for Payment.

3. The amount of retainage with respect to progress payments will be as stipulated in the Agreement.

C. *Review of Applications*:

1. Engineer will, within 10 days after receipt of each Application for Payment, including each resubmittal, either indicate in writing a recommendation of payment and present the Application to Owner, or return the Application to Contractor indicating in writing Engineer's reasons for refusing to recommend payment. In the latter case, Contractor may make the necessary corrections and resubmit the Application.

2. Engineer's recommendation of any payment requested in an Application for Payment will constitute a representation by Engineer to Owner, based on Engineer's observations of the executed Work as an experienced and qualified design professional, and on Engineer's review of the Application for Payment and the accompanying data and schedules, that to the best of Engineer's knowledge, information and belief:

a. the Work has progressed to the point indicated;

b. the quality of the Work is generally in accordance with the Contract Documents (subject to an evaluation of the Work as a functioning whole prior to or upon Substantial Completion, the results of any subsequent tests called for in the Contract Documents, a final determination of quantities and classifications for Unit Price Work under Paragraph 13.03, and any other qualifications stated in the recommendation); and

c. the conditions precedent to Contractor's being entitled to such payment appear to have been fulfilled in so far as it is Engineer's responsibility to observe the Work.

3. By recommending any such payment Engineer will not thereby be deemed to have represented that:

   a. inspections made to check the quality or the quantity of the Work as it has been performed have been exhaustive, extended to every aspect of the Work in progress, or involved detailed inspections of the Work beyond the responsibilities specifically assigned to Engineer in the Contract; or

   b. there may not be other matters or issues between the parties that might entitle Contractor to be paid additionally by Owner or entitle Owner to withhold payment to Contractor.

4. Neither Engineer's review of Contractor's Work for the purposes of recommending payments nor Engineer's recommendation of any payment, including final payment, will impose responsibility on Engineer:

   a. to supervise, direct, or control the Work, or

   b. for the means, methods, techniques, sequences, or procedures of construction, or the safety precautions and programs incident thereto, or

   c. for Contractor's failure to comply with Laws and Regulations applicable to Contractor's performance of the Work, or

   d. to make any examination to ascertain how or for what purposes Contractor has used the money paid on account of the Contract Price, or

   e. to determine that title to any of the Work, materials, or equipment has passed to Owner free and clear of any Liens.

5. Engineer may refuse to recommend the whole or any part of any payment if, in Engineer's opinion, it would be incorrect to make the representations to Owner stated in Paragraph 15.01.C.2.

6. Engineer will recommend reductions in payment (set-offs) necessary in Engineer's opinion to protect Owner from loss because:

   a. the Work is defective, requiring correction or replacement;

   b. the Contract Price has been reduced by Change Orders;

   c. Owner has been required to correct defective Work in accordance with Paragraph 14.07, or has accepted defective Work pursuant to Paragraph 14.04;

   d. Owner has been required to remove or remediate a Hazardous Environmental Condition for which Contractor is responsible; or

   e. Engineer has actual knowledge of the occurrence of any of the events that would constitute a default by Contractor and therefore justify termination for cause under the Contract Documents.

D. *Payment Becomes Due*:

1. Ten days after presentation of the Application for Payment to Owner with Engineer's recommendation, the amount recommended (subject to any Owner set-offs) will become due, and when due will be paid by Owner to Contractor.

E. *Reductions in Payment by Owner*:

1. In addition to any reductions in payment (set-offs) recommended by Engineer, Owner is entitled to impose a set-off against payment based on any of the following:

   a. claims have been made against Owner on account of Contractor's conduct in the performance or furnishing of the Work, or Owner has incurred costs, losses, or damages on account of Contractor's conduct in the performance or furnishing of the Work, including but not limited to claims, costs, losses, or damages from workplace injuries, adjacent property damage, non-compliance with Laws and Regulations, and patent infringement;

   b. Contractor has failed to take reasonable and customary measures to avoid damage, delay, disruption, and interference with other work at or adjacent to the Site;

   c. Contractor has failed to provide and maintain required bonds or insurance;

   d. Owner has been required to remove or remediate a Hazardous Environmental Condition for which Contractor is responsible;

   e. Owner has incurred extra charges or engineering costs related to submittal reviews, evaluations of proposed substitutes, tests and inspections, or return visits to manufacturing or assembly facilities;

   f. the Work is defective, requiring correction or replacement;

   g. Owner has been required to correct defective Work in accordance with Paragraph 14.07, or has accepted defective Work pursuant to Paragraph 14.04;

   h. the Contract Price has been reduced by Change Orders;

   i. an event that would constitute a default by Contractor and therefore justify a termination for cause has occurred;

   j. liquidated damages have accrued as a result of Contractor's failure to achieve Milestones, Substantial Completion, or final completion of the Work;

   k. Liens have been filed in connection with the Work, except where Contractor has delivered a specific bond satisfactory to Owner to secure the satisfaction and discharge of such Liens;

   l. there are other items entitling Owner to a set off against the amount recommended.

2. If Owner imposes any set-off against payment, whether based on its own knowledge or on the written recommendations of Engineer, Owner will give Contractor immediate written notice (with a copy to Engineer) stating the reasons for such action and the specific amount of the reduction, and promptly pay Contractor any amount remaining after deduction of the amount so withheld. Owner shall promptly pay Contractor the amount so withheld, or any adjustment thereto agreed to by Owner and Contractor, if Contractor remedies the reasons for such action. The reduction imposed shall be binding on Contractor unless it duly submits a Change Proposal contesting the reduction.

3. Upon a subsequent determination that Owner's refusal of payment was not justified, the amount wrongfully withheld shall be treated as an amount due as determined by Paragraph 15.01.C.1 and subject to interest as provided in the Agreement.

15.02 *Contractor's Warranty of Title*

A. Contractor warrants and guarantees that title to all Work, materials, and equipment furnished under the Contract will pass to Owner free and clear of (1) all Liens and other title defects, and (2) all patent, licensing, copyright, or royalty obligations, no later than seven days after the time of payment by Owner.

15.03 *Substantial Completion*

A. When Contractor considers the entire Work ready for its intended use Contractor shall notify Owner and Engineer in writing that the entire Work is substantially complete and request that Engineer issue a certificate of Substantial Completion. Contractor shall at the same time submit to Owner and Engineer an initial draft of punch list items to be completed or corrected before final payment.

B. Promptly after Contractor's notification, Owner, Contractor, and Engineer shall make an inspection of the Work to determine the status of completion. If Engineer does not consider the Work substantially complete, Engineer will notify Contractor in writing giving the reasons therefor.

C. If Engineer considers the Work substantially complete, Engineer will deliver to Owner a preliminary certificate of Substantial Completion which shall fix the date of Substantial Completion. Engineer shall attach to the certificate a punch list of items to be completed or corrected before final payment. Owner shall have seven days after receipt of the preliminary certificate during which to make written objection to Engineer as to any provisions of the certificate or attached punch list. If, after considering the objections to the provisions of the preliminary certificate, Engineer concludes that the Work is not substantially complete, Engineer will, within 14 days after submission of the preliminary certificate to Owner, notify Contractor in writing that the Work is not substantially complete, stating the reasons therefor. If Owner does not object to the provisions of the certificate, or if despite consideration of Owner's objections Engineer concludes that the Work is substantially complete, then Engineer will, within said 14 days, execute and deliver to Owner and Contractor a final certificate of Substantial Completion (with a revised punch list of items to be completed or corrected) reflecting such changes from the preliminary certificate as Engineer believes justified after consideration of any objections from Owner.

D. At the time of receipt of the preliminary certificate of Substantial Completion, Owner and Contractor will confer regarding Owner's use or occupancy of the Work following Substantial Completion, review the builder's risk insurance policy with respect to the end of the builder's risk coverage, and confirm the transition to coverage of the Work under a permanent property insurance policy held by Owner. Unless Owner and Contractor agree otherwise in writing, Owner shall bear responsibility for security, operation, protection of the Work, property insurance, maintenance, heat, and utilities upon Owner's use or occupancy of the Work.

E. After Substantial Completion the Contractor shall promptly begin work on the punch list of items to be completed or corrected prior to final payment. In appropriate cases Contractor may submit monthly Applications for Payment for completed punch list items, following the progress payment procedures set forth above.

F. Owner shall have the right to exclude Contractor from the Site after the date of Substantial Completion subject to allowing Contractor reasonable access to remove its property and complete or correct items on the punch list.

15.04 *Partial Use or Occupancy*

A. Prior to Substantial Completion of all the Work, Owner may use or occupy any substantially completed part of the Work which has specifically been identified in the Contract Documents, or which Owner, Engineer, and Contractor agree constitutes a separately

functioning and usable part of the Work that can be used by Owner for its intended purpose without significant interference with Contractor's performance of the remainder of the Work, subject to the following conditions:

1. At any time Owner may request in writing that Contractor permit Owner to use or occupy any such part of the Work that Owner believes to be substantially complete. If and when Contractor agrees that such part of the Work is substantially complete, Contractor, Owner, and Engineer will follow the procedures of Paragraph 15.03.A through E for that part of the Work.

2. At any time Contractor may notify Owner and Engineer in writing that Contractor considers any such part of the Work substantially complete and request Engineer to issue a certificate of Substantial Completion for that part of the Work.

3. Within a reasonable time after either such request, Owner, Contractor, and Engineer shall make an inspection of that part of the Work to determine its status of completion. If Engineer does not consider that part of the Work to be substantially complete, Engineer will notify Owner and Contractor in writing giving the reasons therefor. If Engineer considers that part of the Work to be substantially complete, the provisions of Paragraph 15.03 will apply with respect to certification of Substantial Completion of that part of the Work and the division of responsibility in respect thereof and access thereto.

4. No use or occupancy or separate operation of part of the Work may occur prior to compliance with the requirements of Paragraph 6.05 regarding builder's risk or other property insurance.

15.05 *Final Inspection*

A. Upon written notice from Contractor that the entire Work or an agreed portion thereof is complete, Engineer will promptly make a final inspection with Owner and Contractor and will notify Contractor in writing of all particulars in which this inspection reveals that the Work, or agreed portion thereof, is incomplete or defective. Contractor shall immediately take such measures as are necessary to complete such Work or remedy such deficiencies.

15.06 *Final Payment*

A. *Application for Payment*:

1. After Contractor has, in the opinion of Engineer, satisfactorily completed all corrections identified during the final inspection and has delivered, in accordance with the Contract Documents, all maintenance and operating instructions, schedules, guarantees, bonds, certificates or other evidence of insurance, certificates of inspection, annotated record documents (as provided in Paragraph 7.11), and other documents, Contractor may make application for final payment.

2. The final Application for Payment shall be accompanied (except as previously delivered) by:

a. all documentation called for in the Contract Documents;

b. consent of the surety, if any, to final payment;

c. satisfactory evidence that all title issues have been resolved such that title to all Work, materials, and equipment has passed to Owner free and clear of any Liens or other title defects, or will so pass upon final payment.

d. a list of all disputes that Contractor believes are unsettled; and

e. complete and legally effective releases or waivers (satisfactory to Owner) of all Lien rights arising out of the Work, and of Liens filed in connection with the Work.

3. In lieu of the releases or waivers of Liens specified in Paragraph 15.06.A.2 and as approved by Owner, Contractor may furnish receipts or releases in full and an affidavit of Contractor that: (a) the releases and receipts include all labor, services, material, and equipment for which a Lien could be filed; and (b) all payrolls, material and equipment bills, and other indebtedness connected with the Work for which Owner might in any way be responsible, or which might in any way result in liens or other burdens on Owner's property, have been paid or otherwise satisfied. If any Subcontractor or Supplier fails to furnish such a release or receipt in full, Contractor may furnish a bond or other collateral satisfactory to Owner to indemnify Owner against any Lien, or Owner at its option may issue joint checks payable to Contractor and specified Subcontractors and Suppliers.

B. *Engineer's Review of Application and Acceptance*:

1. If, on the basis of Engineer's observation of the Work during construction and final inspection, and Engineer's review of the final Application for Payment and accompanying documentation as required by the Contract Documents, Engineer is satisfied that the Work has been completed and Contractor's other obligations under the Contract have been fulfilled, Engineer will, within ten days after receipt of the final Application for Payment, indicate in writing Engineer's recommendation of final payment and present the Application for Payment to Owner for payment. Such recommendation shall account for any set-offs against payment that are necessary in Engineer's opinion to protect Owner from loss for the reasons stated above with respect to progress payments. At the same time Engineer will also give written notice to Owner and Contractor that the Work is acceptable, subject to the provisions of Paragraph 15.07. Otherwise, Engineer will return the Application for Payment to Contractor, indicating in writing the reasons for refusing to recommend final payment, in which case Contractor shall make the necessary corrections and resubmit the Application for Payment.

C. *Completion of Work*: The Work is complete (subject to surviving obligations) when it is ready for final payment as established by the Engineer's written recommendation of final payment.

D. *Payment Becomes Due*: Thirty days after the presentation to Owner of the final Application for Payment and accompanying documentation, the amount recommended by Engineer (less any further sum Owner is entitled to set off against Engineer's recommendation, including but not limited to set-offs for liquidated damages and set-offs allowed under the provisions above with respect to progress payments) will become due and shall be paid by Owner to Contractor.

15.07 *Waiver of Claims*

A. The making of final payment will not constitute a waiver by Owner of claims or rights against Contractor. Owner expressly reserves claims and rights arising from unsettled Liens, from defective Work appearing after final inspection pursuant to Paragraph 15.05, from Contractor's failure to comply with the Contract Documents or the terms of any special guarantees specified therein, from outstanding Claims by Owner, or from Contractor's continuing obligations under the Contract Documents.

B. The acceptance of final payment by Contractor will constitute a waiver by Contractor of all claims and rights against Owner other than those pending matters that have been duly submitted or appealed under the provisions of Article 17.

15.08 *Correction Period*

A. If within one year after the date of Substantial Completion (or such longer period of time as may be prescribed by the terms of any applicable special guarantee required by the Contract Documents, or by any specific provision of the Contract Documents), any Work is found to be defective, or if the repair of any damages to the Site, adjacent areas that Contractor has arranged to use through construction easements or otherwise, and other adjacent areas used by Contractor as permitted by Laws and Regulations, is found to be defective, then Contractor shall promptly, without cost to Owner and in accordance with Owner's written instructions:

1. correct the defective repairs to the Site or such other adjacent areas;
2. correct such defective Work;
3. if the defective Work has been rejected by Owner, remove it from the Project and replace it with Work that is not defective, and
4. satisfactorily correct or repair or remove and replace any damage to other Work, to the work of others, or to other land or areas resulting therefrom.

B. If Contractor does not promptly comply with the terms of Owner's written instructions, or in an emergency where delay would cause serious risk of loss or damage, Owner may have the defective Work corrected or repaired or may have the rejected Work removed and replaced. Contractor shall pay all claims, costs, losses, and damages (including but not limited to all fees and charges of engineers, architects, attorneys, and other professionals and all court or arbitration or other dispute resolution costs) arising out of or relating to such correction or repair or such removal and replacement (including but not limited to all costs of repair or replacement of work of others).

C. In special circumstances where a particular item of equipment is placed in continuous service before Substantial Completion of all the Work, the correction period for that item may start to run from an earlier date if so provided in the Specifications.

D. Where defective Work (and damage to other Work resulting therefrom) has been corrected or removed and replaced under this paragraph, the correction period hereunder with respect to such Work will be extended for an additional period of one year after such correction or removal and replacement has been satisfactorily completed.

E. Contractor's obligations under this paragraph are in addition to all other obligations and warranties. The provisions of this paragraph shall not be construed as a substitute for, or a waiver of, the provisions of any applicable statute of limitation or repose.

ARTICLE 16 – SUSPENSION OF WORK AND TERMINATION

16.01 *Owner May Suspend Work*

A. At any time and without cause, Owner may suspend the Work or any portion thereof for a period of not more than 90 consecutive days by written notice to Contractor and Engineer. Such notice will fix the date on which Work will be resumed. Contractor shall resume the Work on the date so fixed. Contractor shall be entitled to an adjustment in the Contract Price or an extension of the Contract Times, or both, directly attributable to any such suspension. Any Change Proposal seeking such adjustments shall be submitted no later than 30 days after the date fixed for resumption of Work.

16.02 *Owner May Terminate for Cause*

A. The occurrence of any one or more of the following events will constitute a default by Contractor and justify termination for cause:

1. Contractor's persistent failure to perform the Work in accordance with the Contract Documents (including, but not limited to, failure to supply sufficient skilled workers or suitable materials or equipment or failure to adhere to the Progress Schedule);

2. Failure of Contractor to perform or otherwise to comply with a material term of the Contract Documents;

3. Contractor's disregard of Laws or Regulations of any public body having jurisdiction; or

4. Contractor's repeated disregard of the authority of Owner or Engineer.

B. If one or more of the events identified in Paragraph 16.02.A occurs, then after giving Contractor (and any surety) ten days written notice that Owner is considering a declaration that Contractor is in default and termination of the contract, Owner may proceed to:

1. declare Contractor to be in default, and give Contractor (and any surety) notice that the Contract is terminated; and

2. enforce the rights available to Owner under any applicable performance bond.

C. Subject to the terms and operation of any applicable performance bond, if Owner has terminated the Contract for cause, Owner may exclude Contractor from the Site, take possession of the Work, incorporate in the Work all materials and equipment stored at the Site or for which Owner has paid Contractor but which are stored elsewhere, and complete the Work as Owner may deem expedient.

D. Owner may not proceed with termination of the Contract under Paragraph 16.02.B if Contractor within seven days of receipt of notice of intent to terminate begins to correct its failure to perform and proceeds diligently to cure such failure.

E. If Owner proceeds as provided in Paragraph 16.02.B, Contractor shall not be entitled to receive any further payment until the Work is completed. If the unpaid balance of the Contract Price exceeds the cost to complete the Work, including all related claims, costs, losses, and damages (including but not limited to all fees and charges of engineers, architects, attorneys, and other professionals) sustained by Owner, such excess will be paid to Contractor. If the cost to complete the Work including such related claims, costs, losses, and damages exceeds such unpaid balance, Contractor shall pay the difference to Owner. Such claims, costs, losses, and damages incurred by Owner will be reviewed by Engineer as to their reasonableness and, when so approved by Engineer, incorporated in a Change Order. When exercising any rights or remedies under this paragraph, Owner shall not be required to obtain the lowest price for the Work performed.

F. Where Contractor's services have been so terminated by Owner, the termination will not affect any rights or remedies of Owner against Contractor then existing or which may thereafter accrue, or any rights or remedies of Owner against Contractor or any surety under any payment bond or performance bond. Any retention or payment of money due Contractor by Owner will not release Contractor from liability.

G. If and to the extent that Contractor has provided a performance bond under the provisions of Paragraph 6.01.A, the provisions of that bond shall govern over any inconsistent provisions of Paragraphs 16.02.B and 16.02.D.

16.03 *Owner May Terminate For Convenience*

A. Upon seven days written notice to Contractor and Engineer, Owner may, without cause and without prejudice to any other right or remedy of Owner, terminate the Contract. In such case, Contractor shall be paid for (without duplication of any items):

1. completed and acceptable Work executed in accordance with the Contract Documents prior to the effective date of termination, including fair and reasonable sums for overhead and profit on such Work;

2. expenses sustained prior to the effective date of termination in performing services and furnishing labor, materials, or equipment as required by the Contract Documents in connection with uncompleted Work, plus fair and reasonable sums for overhead and profit on such expenses; and

3. other reasonable expenses directly attributable to termination, including costs incurred to prepare a termination for convenience cost proposal.

B. Contractor shall not be paid on account of loss of anticipated overhead, profits, or revenue, or other economic loss arising out of or resulting from such termination.

16.04 *Contractor May Stop Work or Terminate*

A. If, through no act or fault of Contractor, (1) the Work is suspended for more than 90 consecutive days by Owner or under an order of court or other public authority, or (2) Engineer fails to act on any Application for Payment within 30 days after it is submitted, or (3) Owner fails for 30 days to pay Contractor any sum finally determined to be due, then Contractor may, upon seven days written notice to Owner and Engineer, and provided Owner or Engineer do not remedy such suspension or failure within that time, terminate the contract and recover from Owner payment on the same terms as provided in Paragraph 16.03.

B. In lieu of terminating the Contract and without prejudice to any other right or remedy, if Engineer has failed to act on an Application for Payment within 30 days after it is submitted, or Owner has failed for 30 days to pay Contractor any sum finally determined to be due, Contractor may, seven days after written notice to Owner and Engineer, stop the Work until payment is made of all such amounts due Contractor, including interest thereon. The provisions of this paragraph are not intended to preclude Contractor from submitting a Change Proposal for an adjustment in Contract Price or Contract Times or otherwise for expenses or damage directly attributable to Contractor's stopping the Work as permitted by this paragraph.

ARTICLE 17 – FINAL RESOLUTION OF DISPUTES

17.01 *Methods and Procedures*

A. *Disputes Subject to Final Resolution*: The following disputed matters are subject to final resolution under the provisions of this Article:

1. A timely appeal of an approval in part and denial in part of a Claim, or of a denial in full; and

2. Disputes between Owner and Contractor concerning the Work or obligations under the Contract Documents, and arising after final payment has been made.

B. *Final Resolution of Disputes*: For any dispute subject to resolution under this Article, Owner or Contractor may:

1. elect in writing to invoke the dispute resolution process provided for in the Supplementary Conditions; or

2. agree with the other party to submit the dispute to another dispute resolution process; or

3. if no dispute resolution process is provided for in the Supplementary Conditions or mutually agreed to, give written notice to the other party of the intent to submit the dispute to a court of competent jurisdiction.

ARTICLE 18 – MISCELLANEOUS

18.01 *Giving Notice*

A. Whenever any provision of the Contract Documents requires the giving of written notice, it will be deemed to have been validly given if:

1. delivered in person, by a commercial courier service or otherwise, to the individual or to a member of the firm or to an officer of the corporation for which it is intended; or

2. delivered at or sent by registered or certified mail, postage prepaid, to the last business address known to the sender of the notice.

18.02 *Computation of Times*

A. When any period of time is referred to in the Contract by days, it will be computed to exclude the first and include the last day of such period. If the last day of any such period falls on a Saturday or Sunday or on a day made a legal holiday by the law of the applicable jurisdiction, such day will be omitted from the computation.

18.03 *Cumulative Remedies*

A. The duties and obligations imposed by these General Conditions and the rights and remedies available hereunder to the parties hereto are in addition to, and are not to be construed in any way as a limitation of, any rights and remedies available to any or all of them which are otherwise imposed or available by Laws or Regulations, by special warranty or guarantee, or by other provisions of the Contract. The provisions of this paragraph will be as effective as if repeated specifically in the Contract Documents in connection with each particular duty, obligation, right, and remedy to which they apply.

18.04 *Limitation of Damages*

A. With respect to any and all Change Proposals, Claims, disputes subject to final resolution, and other matters at issue, neither Owner nor Engineer, nor any of their officers, directors, members, partners, employees, agents, consultants, or subcontractors, shall be liable to Contractor for any claims, costs, losses, or damages sustained by Contractor on or in connection with any other project or anticipated project.

18.05 *No Waiver*

A. A party's non-enforcement of any provision shall not constitute a waiver of that provision, nor shall it affect the enforceability of that provision or of the remainder of this Contract.

18.06 *Survival of Obligations*

A. All representations, indemnifications, warranties, and guarantees made in, required by, or given in accordance with the Contract, as well as all continuing obligations indicated in the Contract, will survive final payment, completion, and acceptance of the Work or termination or completion of the Contract or termination of the services of Contractor.

18.07 *Controlling Law*

A. This Contract is to be governed by the law of the state in which the Project is located.

18.08 *Headings*

A. Article and paragraph headings are inserted for convenience only and do not constitute parts of these General Conditions.

Supplementary Conditions

These Supplementary Conditions amend or supplement the Standard General Conditions of the Construction Contract, EJCDC® C-700 (2013 Edition). All provisions that are not so amended or supplemented remain in full force and effect.

The terms used in these Supplementary Conditions have the meanings stated in the General Conditions. Additional terms used in these Supplementary Conditions have the meanings stated below, which are applicable to both the singular and plural thereof.

The address system used in these Supplementary Conditions is the same as the address system used in the General Conditions, with the prefix "SC" added thereto.

ARTICLE 5 – AVAILABILITY OF LANDS; SUBSURFACE AND PHYSICAL CONDITIONS; HAZARDOUS ENVIRONMENTAL CONDITIONS

SC-5.03 Subsurface and Physical Conditions

SC-5.03 Delete Paragraphs 5.03.A and 5.03.B in their entirety and insert the following:

A. No reports of exploration or test of subsurface conditions at or adjacent to the Site, or drawings of physical conditions relating to existing surface or subsurface structures at the Site, are known to the Owner.

SC-5.06 Hazardous Environmental Conditions

SC 5.06 Delete Paragraphs 5.06.A and 5.06.B in their entirety and insert the following:

A. No reports or drawings related to Hazardous Environmental Conditions at the Site are known to Owner.

B. Not Used.

ARTICLE 6 – BONDS AND INSURANCE

SC-6.03 Contractor's Liability Insurance

SC 6.03 Add the following new paragraph immediately after Paragraph 6.03.J:

K. The limits of liability for the insurance required by Paragraph 6.03 of the General Conditions shall provide coverage for not less than the following amounts or greater where required by Laws and Regulations:

1. Workers' Compensation, and related coverages under Paragraphs 6.03.A.1 and A.2 of the General Conditions:

$1,000,000.00 limit each accident

2. Contractor's Commercial General Liability under Paragraphs 6.03.B and 6.03.C of the General Conditions:

Combined single limit of $1,000,000.00 each occurrence for bodily injury 7 property damage. Must include 60 day written notice for change of coverate, cancellation, or non-renewal of coverate. Must name "The Charter Township of Ypsilanti and its past, present, and future elected officials shall be named as "additional named insured" on the general liability policy with respect to the services provided under this contract' – Occurrence basis.

3. **Automobile Liability under Paragraph 6.03.D of the General Conditions:**

   Covers owned, hired, and non-owned vehicles with personal protection insurance and property protection. Includes residual liability insurance with a combined single limit of $1,000,000.00 each accident for bodily injury and property damage.

4. **Owner's Protective Liability**

   Combined single limit of $1,000,000.00 each occurrence for bodily injury & property damage.

5. **Builder's Risk**

   Option. May be used to cover everything.

ARTICLE 7 – CONTRACTOR'S RESPONSIBILITIES

SC-7.02 Labor; Working Hours

SC-7.02.B. Add the following new subparagraphs immediately after Paragraph 7.02.B:

1. **Regular working hours will be** *7 A.M to 7 P.M.*
2. **Owner's legal holidays shall be defined as U.S. Federal Holidays.**

SC-7.02.B. Amend the first and second sentences of Paragraph 7.02.B to state "…all Work at the Site shall be performed during regular working hours, Monday through Saturday. Contractor will not perform Work on a Sunday or any legal holiday."

SC-7.08 Permits

SC 7.08 Add the following new subparagraphs immediately after Paragraph 7.08.A:

B. A Soil Erosion and Sedimentation Control (SESC) Permit is not required since the Owner is an Authorized Public Agency (APA). However, the Contractor will need to construct the project in accordance with SESC measure as described in the bidding plans and specifications.

ARTICLE 10 – ENGINEER'S STATUS DURING CONSTRUCTION

SC-10.03 Project Representative

SC-10.03 Add the following new paragraphs immediately after Paragraph 10.03.A:

B. The Resident Project Representative (RPR) will be Engineer's representative at the Site, will act as directed by and under the supervision of Engineer, and will confer with Engineer regarding RPR's actions.

1. **General: RPR's dealings in matters pertaining to the Work in general shall be with Engineer and Contractor. RPR's dealings with Subcontractors shall only be through or with the full knowledge and approval of Contractor. RPR shall generally communicate with Owner only with the knowledge of and under the direction of Engineer.**
2. **Schedules: Review the progress schedule, schedule of Shop Drawing and Sample submittals, and Schedule of Values prepared by Contractor and consult with Engineer concerning acceptability.**
3. **Conferences and Meetings: Attend meetings with Contractor, such as preconstruction conferences, progress meetings, job conferences, and**

other Project-related meetings, and prepare and circulate copies of minutes thereof.

4. **Liaison:**

   a. **Serve as Engineer's liaison with Contractor. Working principally through Contractor's authorized representative or designee, assist in providing information regarding the provisions and intent of the Contract Documents.**

   b. **Assist Engineer in serving as Owner's liaison with Contractor when Contractor's operations affect Owner's on-Site operations.**

   c. **Assist in obtaining from Owner additional details or information, when required for proper execution of the Work.**

5. **Interpretation of Contract Documents: Report to Engineer when clarifications and interpretations of the Contract Documents are needed and transmit to Contractor clarifications and interpretations as issued by Engineer.**

6. **Shop Drawings and Samples:**

   a. **Record date of receipt of Samples and Contractor-approved Shop Drawings.**

   b. **Receive Samples which are furnished at the Site by Contractor, and notify Engineer of availability of Samples for examination.**

   c. **Advise Engineer and Contractor of the commencement of any portion of the Work requiring a Shop Drawing or Sample submittal for which RPR believes that the submittal has not been approved by Engineer.**

7. **Modifications: Consider and evaluate Contractor's suggestions for modifications in Drawings or Specifications and report such suggestions, together with RPR's recommendations, if any, to Engineer. Transmit to Contractor in writing decisions as issued by Engineer.**

8. **Review of Work and Rejection of Defective Work:**

   a. **Conduct on-Site observations of Contractor's work in progress to assist Engineer in determining if the Work is in general proceeding in accordance with the Contract Documents.**

   b. **Report to Engineer whenever RPR believes that any part of Contractor's work in progress is defective, will not produce a completed Project that conforms generally to the Contract Documents, or will imperil the integrity of the design concept of the completed Project as a functioning whole as indicated in the Contract Documents, or has been damaged, or does not meet the requirements of any inspection, test or approval required to be made; and advise Engineer of that part of work in progress that RPR believes should be corrected or rejected or should be uncovered for observation, or requires special testing, inspection or approval.**

9. **Inspections, Tests, and System Start-ups:**

   a. **Verify that tests, equipment, and systems start-ups and operating and maintenance training are conducted in the presence of appropriate**

Owner's personnel, and that Contractor maintains adequate records thereof.

b. Observe, record, and report to Engineer appropriate details relative to the test procedures and systems start-ups.

10. Records:

a. Prepare a daily report or keep a diary or log book, recording Contractor's hours on the Site, Subcontractors present at the Site, weather conditions, data relative to questions of Change Orders, Field Orders, Work Change Directives, or changed conditions, Site visitors, deliveries of equipment or materials, daily activities, decisions, observations in general, and specific observations in more detail as in the case of observing test procedures; and send copies to Engineer.

b. Record names, addresses, fax numbers, e-mail addresses, web site locations, and telephone numbers of all Contractors, Subcontractors, and major Suppliers of materials and equipment.

c. Maintain records for use in preparing Project documentation.

11. Reports:

a. Furnish to Engineer periodic reports as required of progress of the Work and of Contractor's compliance with the Progress Schedule and schedule of Shop Drawing and Sample submittals.

b. Draft and recommend to Engineer proposed Change Orders, Work Change Directives, and Field Orders. Obtain backup material from Contractor.

c. Immediately notify Engineer of the occurrence of any Site accidents, emergencies, acts of God endangering the Work, force majeure or delay events, damage to property by fire or other causes, or the discovery of any Constituent of Concern or Hazardous Environmental Condition.

12. Payment Requests: Review applications for payment with Contractor for compliance with the established procedure for their submission and forward with recommendations to Engineer, noting particularly the relationship of the payment requested to the Schedule of Values, Work completed, and materials and equipment delivered at the Site but not incorporated in the Work.

13. Certificates, Operation and Maintenance Manuals: During the course of the Work, verify that materials and equipment certificates, operation and maintenance manuals and other data required by the Contract Documents to be assembled and furnished by Contractor are applicable to the items actually installed and in accordance with the Contract Documents, and have these documents delivered to Engineer for review and forwarding to Owner prior to payment for that part of the Work.

14. Completion:

a. Participate in Engineer's visits to the Site to determine Substantial Completion, assist in the determination of Substantial Completion and the preparation of a punch list of items to be completed or corrected.

b. Participate in Engineer's final visit to the Site to determine completion of the Work, in the company of Owner and Contractor, and prepare a final punch list of items to be completed and deficiencies to be remedied.

c. Observe whether all items on the final list have been completed or corrected and make recommendations to Engineer concerning acceptance and issuance of the notice of acceptability of the work.

C. The RPR shall not:

1. Authorize any deviation from the Contract Documents or substitution of materials or equipment (including "or-equal" items).

2. Exceed limitations of Engineer's authority as set forth in the Contract Documents.

3. Undertake any of the responsibilities of Contractor, Subcontractors, or Suppliers.

4. Advise on, issue directions relative to, or assume control over any aspect of the means, methods, techniques, sequences or procedures of Contractor's work.

5. Advise on, issue directions regarding, or assume control over security or safety practices, precautions, and programs in connection with the activities or operations of Owner or Contractor.

6. Participate in specialized field or laboratory tests or inspections conducted off-site by others except as specifically authorized by Engineer.

7. Accept Shop Drawing or Sample submittals from anyone other than Contractor.

8. Authorize Owner to occupy the Project in whole or in part.

ARTICLE 13 – COST OF THE WORK; ALLOWANCES; UNIT PRICE WORK

SC-13.01 Cost of the Work

SC-13.01 Add the following to the end of Paragraph 13.01.B.1:

Contractor is required to observe and abide by The Charter Township of Ypsilanti's Prevailing Wage and Living Wage requirements. The relevant Township ordinances, as well as the relevant Prevailing Wage Decision are included in the Bidding Documents.

Work Change Directive No.

Date of Issuance:		Effective Date:	
Owner:	Ypsilanti Charter Township	Owner's Contract No.:	
Contractor:		Contractor's Project No.:	
Engineer:	Spicer Group, Inc.	Engineer's Project No.:	133251SG2022
Project:	Clubview Park Improvements	Contract Name:	

Contractor is directed to proceed promptly with the following change(s):

Description:

Attachments: *[List documents supporting change]*

Purpose for Work Change Directive:

Directive to proceed promptly with the Work described herein, prior to agreeing to changes on Contract Price and Contract Time, is issued due to: *[check one or both of the following]*

☐ Non-agreement on pricing of proposed change.

☐ Necessity to proceed for schedule or other Project reasons.

Estimated Change in Contract Price and Contract Times (non-binding, preliminary):

Contract Price $ [increase] [decrease].

Contract Time days [increase] [decrease].

Basis of estimated change in Contract Price:

☐ Lump Sum ☐ Unit Price

☐ Cost of the Work ☐ Other

RECOMMENDED:	AUTHORIZED BY:	RECEIVED:
By:	By:	By:
Engineer (Authorized Signature)	Owner (Authorized Signature)	Contractor (Authorized Signature)
Title:	Title:	Title:
Date:	Date:	Date:

Approved by Funding Agency (if applicable)

By: Date:

Title:

Change Order No. _____

Date of Issuance:	Effective Date:
Owner: Ypsilanti Charter Township	Owner's Contract No.:
Contractor:	Contractor's Project No.:
Engineer: Spicer Group, Inc.	Engineer's Project No.: 133251SG2022
Project: Clubview Park Improvements	Contract Name:

The Contract is modified as follows upon execution of this Change Order:

Description:

Attachments: *[List documents supporting change]*

CHANGE IN CONTRACT PRICE	**CHANGE IN CONTRACT TIMES** *[note changes in Milestones if applicable]*
Original Contract Price: $_____	Original Contract Times: Substantial Completion: _____ Ready for Final Payment: _____ days or dates
[Increase] [Decrease] from previously approved Change Orders No. ___ to No. ___: $_____	[Increase] [Decrease] from previously approved Change Orders No. ___ to No. ___: Substantial Completion: _____ Ready for Final Payment: _____ days
Contract Price prior to this Change Order: $_____	Contract Times prior to this Change Order: Substantial Completion: _____ Ready for Final Payment: _____ days or dates
[Increase] [Decrease] of this Change Order: $_____	[Increase] [Decrease] of this Change Order: Substantial Completion: _____ Ready for Final Payment: _____ days or dates
Contract Price incorporating this Change Order: $_____	Contract Times with all approved Change Orders: Substantial Completion: _____ Ready for Final Payment: _____ days or dates

RECOMMENDED:	ACCEPTED:	ACCEPTED:
By: _____	By: _____	By: _____
Engineer (if required)	Owner (Authorized Signature)	Contractor (Authorized Signature)
Title: _____	Title: _____	Title: _____
Date: _____	Date: _____	Date: _____

Approved by Funding Agency (if applicable)

By: _____ Date:

Title: _____

Field Order No. _____

Date of Issuance:		Effective Date:	
Owner:	Ypsilanti Charter Township	Owner's Contract No.:	
Contractor:		Contractor's Project No.:	
Engineer:	Spicer group, Inc.	Engineer's Project No.:	133251SG2022
Project:	Clubview Park Improvements	Contract Name:	

Contractor is hereby directed to promptly execute this Field Order, issued in accordance with General Conditions Paragraph III "Changes in the Work", for minor changes in the Work without changes in Contract Price or Contract Times. If Contractor considers that a change in Contract Price or Contract Times is required, submit a Change Proposal before proceeding with this Work.

Reference: _____ _____
Specification(s) Drawing(s) / Detail(s)

Description:

Attachments:

ISSUED:	RECEIVED:
By: _____	By: _____
Engineer (Authorized Signature)	Contractor (Authorized Signature)
Title: _____	Title: _____
Date: _____	Date: _____

Copy to: Owner

SECTION 32 91 19

LANDSCAPE GRADING

PART 1 - GENERAL

1.1 SUMMARY

A. Section Includes:

1. Final grade topsoil for finish landscaping.

B. Related Sections:
1. Section 31 23 23 - Fill
2. Section 32 05 13 - Soils for Earthwork

1.2 SUBMITTALS

A. Section 01 33 00 - Submittal Procedures: Submittal procedures

B. Materials Source: Submit name of imported materials source.

C. Manufacturer's Certificate: Certify Products meet or exceed specified requirements.

1.3 QUALITY ASSURANCE

A. Furnish each topsoil material from single source throughout the Work.

B. Perform Work in accordance with Michigan Department of Transportation standard.

C. Maintain one copy on site.

PART 2 - PRODUCTS

2.1 MATERIAL

A. Topsoil: as specified in Section 31 05 13.

PART 3 - EXECUTION

3.1 EXAMINATION

A. Section 01 30 00 - Administrative Requirements: Verification of existing conditions before starting work.

B. Verify substrate base has been contoured and compacted.

3.2 PREPARATION

A. Protect landscaping and other features remaining as final Work.

B. Protect existing structures, fences, sidewalks, utilities, paving, and curbs.

3.3 SUBSTRATE PREPARATION

A. Eliminate uneven areas and low spots.

B. Scarify surface to depth of 3 inches where topsoil is scheduled. Scarify in areas where equipment used for hauling and spreading topsoil has compacted subsoil.

3.4 PLACING TOPSOIL

A. Place topsoil in areas where seeding is required. Place topsoil during dry weather.

B. Fine grade topsoil to eliminate rough or low areas. Maintain profiles and contour of subgrade.

C. Remove roots, weeds, rocks, and foreign material while spreading.

D. Lightly compact placed topsoil.

E. Remove surplus subsoil and topsoil from site.

F. Leave stockpile area and site clean and raked, ready to receive landscaping.

3.5 PROTECTION OF INSTALLED WORK

A. Section 01 70 00 - Execution and Closeout Requirements: Requirements for protecting finished Work.

B. Prohibit construction traffic over topsoil.

3.6 SCHEDULES

A. Compacted topsoil thicknesses:

1. Seeded Grass: 3 inches.

END OF SECTION 32 91 19

SECTION 32 92 19

SEEDING

PART 1 GENERAL

1.1 SUMMARY

A. Section Includes:
   1. Fertilizing.
   2. Seeding.
   3. Hydroseeding.
   4. Mulching.
   5. Maintenance.

B. Related Sections:
   1. Section 31 22 13 - Rough Grading.
   2. Section 32 91 19 - Landscape Grading: Preparation of subsoil and placement of topsoil in preparation for the Work of this section.

1.2 REFERENCES

A. ASTM International:
   1. ASTM C602 - Standard Specification for Agricultural Liming Materials.

B. FS 0-F-241 – Fertilizers, Mixed, Commercial.

1.3 DEFINITIONS

A. Weeds: Include Dandelion, Jimsonweed, Quackgrass, Horsetail, Morning Glory, Rush Grass, Mustard, Lambsquarter, Chickweed, Cress, Crabgrass, Canadian Thistle, Nutgrass, Poison Oak, Blackberry, Tansy Ragwort, Bermuda Grass, Johnson Grass, Poison Ivy, Nut Sedge, Nimble Will, Bindweed, Bent Grass, Wild Garlic, Perennial Sorrel, and Brome Grass.

1.4 PROTECTION

A. Protect landscaping and other features remaining as final Work.

B. Protect existing structures, fences, roads, sidewalks, paving, mailboxes curbs, etc.

1.5 SUBMITTALS

A. Section 01 33 00 - Submittal Procedures: Requirements for submittals.

B. Product Data: Submit data for seed mix, fertilizer, mulch, and other accessories.

C. Manufacturer's Certificate: Certify Products meet or exceed specified requirements.

1.6 CLOSEOUT SUBMITTALS

A. Section 01 70 00 - Execution and Closeout Requirements: Requirements for submittals.

B. Operation and Maintenance Data: Include maintenance instructions, cutting method and maximum grass height; types, application frequency, and recommended coverage of fertilizer.

1.7 QUALITY ASSURANCE

A. Provide seed mixture in containers showing percentage of seed mix, germination percentage, inert matter percentage, weed percentage, year of production, net weight, date of packaging, and location of packaging.

B. Perform Work in accordance with State of Michigan Department of Transportation Standards.

C. Provide signed affidavit stating the amount and type of seed, fertilizer, and mulch applied per acre.

D. Maintain one copy of each document on site.

1.8 REGULATOR REQUIREMENTS

A. Comply with regulatory agencies for fertilizer and herbicide composition.

1.9 QUALIFICATIONS

A. Seed Supplier: Company specializing in manufacturing Products specified in this section with minimum three years documented experience.

B. Installer: Company specializing in performing work of this section with minimum 3 years documented experience.

C. Maintenance Services: Shall be paid by the Contractor for up to one (1) year to guarantee establishment of growth.

1.10 DELIVERY, STORAGE, AND HANDLING

A. Section 01 60 00 - Product Requirements: Product storage and handling requirements.

B. Deliver grass seed mixture in sealed containers. Seed in damaged packaging is not acceptable.

C. Deliver fertilizer in waterproof bags showing weight, chemical analysis, and name of manufacturer.

1.11 MAINTENANCE SERVICE

A. Section 01 70 00 - Execution and Closeout Requirements: Requirements for maintenance service.

B. Maintain seeded and sodded areas immediately after placement until grass is well established, exhibits a vigorous growing condition and is accepted by Owner. Guarantee replacement of dead material for one year from date of substantial completion.

C. Contractor shall be responsible for maintaining adequate seedbed moisture until the sodbed is established.

1.12 WARRANTY AND REPLACEMENT

A. Seeded areas must have a relatively uniform stand of grass with no bare spots over 6 inches square at the time of substantial completion. Reseed at the original rate. All areas failing to establish growth within ninety (90) days after germination or one growing season, whichever is longest, for any reason whatsoever, will be redone at the contractor's expense.

PART 2 PRODUCTS

2.1 MATERIALS

A. Furnish materials in accordance with Municipal, Federal and State Standards.

B. Topsoil: Imported, friable loam; free of subsoil, roots, grass, excessive amounts of weeds, stone, and foreign matter; acidity range (pH) of 5.5 to 7.5; containing a minimum of 4 percent and a maximum of 25 percent organic matter.

C. Seed Mix:
   1. Grass Seed Mix:
      a. Acceptable Seed Supplier: La Crosse Seed Headquarters, or approved equal. Contact: 16450 Felton Rd., Lansing, MI 48906, (800)647-8873, (517) 999-7333. jhallenbeck@laxseed.com
      b. Survivor Mix:
         15% Kentucky Bluegrass (1 variety)
         15% Turf Type (1 elite variety) Perennial Ryegrass
         15% Chewings Fescue (1 elite variety)
         15% Creeping Red Fescue (1 variety)
         40% Turf Type Tall Fescue (1 elite variety)

D. Fertilizer: FS O-F-241, type and grade recommended for grass, with 50% of the elements derived from organic sources and of proportion necessary to eliminate deficiencies of topsoil to the following proportions: 18% nitrogen, 24% phosphoric acid, 6% potassium.
   1. To be placed on landscaping seeding.

E. Mulch: Small grain straw mulch that is clean and weed free unless otherwise indicated.
   1. Hydroseeding Mulching Material: Conwed Verdoyl #2000
   2. Mulch Blankets: North American Green SC150BN, or approved equal, in areas with slopes 4 horizontal to 1 vertical and steeper as indicated on the plans or directed by the Engineer.
      a. Install all mulch blankets with 6-inch North American Green Eco Stakes, or approved equal. Stake according to manufacturer's recommendations as approved by the Engineer.

F. Soil Binding Agent: Non-toxic, biodegradable materials that are environmentally safe. Applied at a rate of 1 lb per 1000 square feet.

G. Water: Clean, fresh and free of substances or matter which could inhibit vigorous growth of grass.

H. Lime: ASTM C602, Class T agricultural limestone containing a minimum 80 percent calcium carbonate equivalent.

I. Erosion Fabric: Jute matting, open weave.

J. Stakes: Softwood lumber, chisel pointed.

K. String: Inorganic fiber.

L. Herbicide: 25% Prometon, 4-bis, and 75% inert ingredients.

2.2 SOURCE QUALITY CONTROL

A. Section 01 40 00 - Quality Requirements: Testing, inspection and analysis requirements.

B. Analyze to ascertain percentage of nitrogen, phosphorus, potash, soluble salt content, organic matter content, and pH value.

C. Provide recommendation for fertilizer and lime application rates for specified seed mix as result of testing.

D. Testing is not required when recent tests and certificates are available for imported topsoil. Submit these test results to testing laboratory. Indicate, by test results, information necessary to determine suitability.

E. Notify Engineer 72 hours prior to hydroseeding and fertilizing for approval to proceed.

PART 3 EXECUTION

3.1 EXAMINATION

A. Section 01 30 00 - Administrative Requirements: Verification of existing conditions before starting work.

B. Verify prepared soil base is ready to receive the Work of this section.

C. Landscape Seeding: Verify that prepared soil base is read to receive the work of this section. See Section 32 91 19 – Landscape Grading.

3.2 FERTILIZING

A. Apply fertilizer at application rate 500 lbs per acre.

B. Apply after smooth raking of topsoil and prior to roller compaction.

C. Do not apply fertilizer at same time or with same machine used to apply seed.

D. Mix fertilizer thoroughly into upper 2 inches of topsoil.

E. Lightly water soil to aid dissipation of fertilizer. Irrigate top level of soil uniformly.

3.3 SEEDING

A. Apply seed at rate of 500 lbs per acre evenly in two intersecting directions. Rake in lightly.

B. Do not seed areas in excess of that which can be mulched on same day.

C. Planting Season: May 1 to October 10 unless otherwise approved by the Engineer.

D. Do not sow immediately following rain, when ground is too dry, or when winds are over 12 mph.

E. Roll seeded area with roller not exceeding 112 lbs/linear foot.

F. Immediately following seeding and compacting, apply mulch to thickness of 1/8 inches. Maintain clear of shrubs and trees.

G. Apply water with fine spray immediately after each area has been mulched. Saturate to 4 inches of soil.

3.4 HYDROSEEDING

A. Apply seeded slurry for lawn with a hydraulic seeder at a rate of 8 lbs per 1000 sq ft evenly in two intersecting directions. Native seed will be seeded at at the rate earlier specified in this section.

B. Do not hydroseed area in excess of what which can be mulched on same day.

C. Immediately following seeding, apply mulch at a rate of 50 lbs per 1000 sq ft. Maintain clear of shrubs and trees.

D. Apply water with a fine spray immediately after each area has been mulched. Saturate to 3 inches of soil.

3.5 SEED PROTECTION

A. Cover seeded slopes where grade is 6 inches per foot or greater with erosion fabric. Roll fabric onto slopes without stretching or pulling.

B. Lay fabric smoothly on surface, bury top end of each section in 6-inch-deep excavated topsoil trench. Overlap edges and ends of adjacent rolls minimum 12 inches. Backfill trench and rake smooth, level with adjacent soil.

C. Secure outside edges and overlaps at 36 inch intervals with stakes.

D. Lightly dress slopes with topsoil to ensure close contact between fabric and soil.

E. At sides of ditches, lay fabric laps in direction of water flow. Lap ends and edges minimum 6 inches.

3.6 QUALITY CONTROL

A. Notify Engineer 3 working days prior to seeding and fertilizing for approval to proceed.

B. Seeding shall not be done during windy weather (above 25 mph) or when the ground is overly wet (saturated) or frozen.

C. All areas that are partially completed to grade, will be prepare and seeded during the first available planting period and will not be allowed to sit idle for long periods of time without receiving the erosion control specified in the contract.

D. Planting Season: April 1 to May 31, or September 1 to October 31. No Seeding shall be done before or after these dates with the Engineer's written approval.

3.7 MAINTENANCE

A. Immediately reseed areas showing bare spots.

B. Repair any eroded areas and reseed immediately.

C. Contractor shall guarantee a uniform grass growth over the entire project and shall reseed bare and thin areas until this is accomplished at no additional cost to the project.

D. Water to prevent grass and soil from drying out.

E. Roll surface to remove minor depressions or irregularities.

F. Control growth of weeds. Apply herbicides. Remedy damage resulting from improper use of herbicides.

G. Repair washouts or gullies.

H. Protect from traffic and erosion in newly seeded areas is the responsibility of the Contractor. Safety fences and/or silt fences with appropriate signage may be used at the Contractor's expense until the grasses are fully established.

END OF SECTION

SECTION 01 10 00

SUMMARY

PART 1 - GENERAL

1.1 SUMMARY

A. Section Includes:

1. Contract description.
2. Contractor's use of Site.
3. Permits.
4. Specification conventions.

1.2 CONTRACT DESCRIPTION

A. Work of the Project includes demolition of an approximately 120’ x 120’ tennis court playing surface, construction of a new 120’ x 120’ tennis and pickleball multi-use playing surface, salvaging fencing, and restoration.

B. Perform Work of Contract under stipulated sum Contract with Owner according to Conditions of Contract.

1.3 CONTRACTOR'S USE OF SITE

A. Access to Site: Contractor may, at their own cost, close the park or portions of the park to public. Contractor is responsible for safety and security of the site. Contractor must allow safe and reasonable access to the Owner or Owner’s representative.

B. Time Restrictions for Performing Work: as described in General and Supplemental Conditions.

C. Construction Plan: Before start of construction, submit by email an electronic file in PDF format of construction plan regarding access to Work, use of Site, and utility outages for acceptance by Owner. After acceptance of plan, construction operations shall comply with accepted plan unless deviations are accepted by Owner in writing.

1.4 PERMITS

A. Furnish any necessary permits for construction of Work and delivery of materials.

1.5 SPECIFICATION CONVENTIONS

A. These Specifications are written in imperative mood and streamlined form. This imperative language is directed to Contractor unless specifically noted otherwise. The words "shall be" are included by inference where a colon (:) is used within sentences or phrases.

PART 2 - PRODUCTS - Not Used

PART 3 - EXECUTION - Not Used

END OF SECTION 01 10 00

SECTION 01 20 00

PRICE AND PAYMENT PROCEDURES

PART 1 - GENERAL

1.1 SECTION INCLUDES

A. Application for Payment.

B. Change procedures.

C. Defect assessment.

D. Unit prices.

1.2 APPLICATION FOR PAYMENT

A. Submit via email electronic file in PDF format of each Application for Payment on EJCDC C-620 - Contractor's Application for Payment.

B. Content and Format: Use Schedule of Values for listing items in Application for Payment.

C. Submit updated construction schedule with each Application for Payment.

D. Payment Period: Submit at intervals stipulated in the Agreement.

E. Submit submittals with transmittal letter as specified in Section 01 33 00 - Submittal Procedures.

F. Substantiating Data: When Architect/Engineer requires substantiating information, submit data justifying dollar amounts in question. Include the following with Application for Payment:
   1. Partial release of liens from major Subcontractors and vendors.
   2. Affidavits attesting to off-Site stored products.
   3. Construction Progress Schedule, revised and current as specified in Section 01 33 00 - Submittal Procedures.

1.3 CHANGE PROCEDURES

A. Submittals: Submit name of individual who is authorized to receive change documents and is responsible for informing others in Contractor's employ or Subcontractors of changes to the Work.

B. Carefully study and compare Contract Documents before proceeding with fabrication and installation of Work. Promptly advise Architect/Engineer of any error, inconsistency, omission, or apparent discrepancy.

C. Requests for Interpretation (RFI) and Clarifications: Allot time in construction scheduling for liaison with Architect/Engineer; establish procedures for handling queries and clarifications.

1. Use CSI Form 13.2A - Request for Interpretation for requesting interpretations.
2. Architect/Engineer may respond with a direct answer on the Request for Interpretation form,, EJCDC C-942 - Field Order, or CSI Form 13/6A - Change Order Request (Proposal).

D. Architect/Engineer will advise of minor changes in the Work not involving adjustment to Contract Sum/Price or Contract Time by issuing supplemental instructions on EJCDC C-942.

E. Architect/Engineer may issue CSI Form 13/6A including a detailed description of proposed change with supplementary or revised Drawings and Specifications, a change in Contract Time for executing the change with stipulation of overtime work required and with the period of time during which the requested price will be considered valid. Contractor will prepare and submit estimate within 5 days.

F. Document requested substitutions according to Section 01 25 00 - Substitution Procedures.

G. Unit Price Change Order: For Contract unit prices and quantities, the Change Order will be executed on a fixed unit price basis. For unit costs or quantities of units of that which are not predetermined, execute Work under Work Directive Change. Changes in Contract Sum/Price or Contract Time will be computed as specified for Force Account Change Order.

H. Work Directive Change: Architect/Engineer may issue directive, on EJCDC C-940 - Work Change Directive signed by Owner, instructing Contractor to proceed with change in the Work, for subsequent inclusion in a Change Order. Document will describe changes in the Work and designate method of determining any change in Contract Sum/Price or Contract Time. Promptly execute change.

I. Force Account Change Order: Submit itemized account and supporting data after completion of change, within time limits indicated in Conditions of the Contract. Architect/Engineer will determine change allowable in Contract Sum/Price and Contract Time as provided in Contract Documents.

J. Maintain detailed records of Work done on force account basis. Provide full information required for evaluation of proposed changes and to substantiate costs for changes in the Work.

K. Document each quotation for change in Project Cost or Time with sufficient data to allow evaluation of quotation.

L. Change Order Forms: EJCDC C-941 - Change Order.

M. Execution of Change Orders: Architect/Engineer will issue Change Orders for signatures of parties as provided in Conditions of the Contract.

N. Correlation of Contractor Submittals:

1. Promptly revise Schedule of Values and Application for Payment forms to record each authorized Change Order as separate line item and adjust Contract Sum/Price.

2. Promptly revise Progress Schedules to reflect change in Contract Time, revise subschedules to adjust times for other items of Work affected by the change, and resubmit.
3. Promptly enter changes in Record Documents.

1.4 DEFECT ASSESSMENT

A. Replace the Work, or portions of the Work, not conforming to specified requirements.

B. If, in the opinion of Architect/Engineer, it is not practical to remove and replace the Work, Architect/Engineer will direct appropriate remedy or adjust payment.

C. The defective Work may remain, but unit sum/price will be adjusted to new sum/price at discretion of Architect/Engineer.

D. Defective Work will be partially repaired according to instructions of Architect/Engineer, and unit sum/price will be adjusted to new sum/price at discretion of Architect/Engineer.

E. Individual Specification Sections may modify these options or may identify specific formula or percentage sum/price reduction.

F. Authority of Architect/Engineer to assess defects and identify payment adjustments is final.

G. Nonpayment for Rejected Products: Payment will not be made for rejected products for any of the following reasons:

1. Products wasted or disposed of in a manner that is not acceptable.
2. Products determined as unacceptable before or after placement.
3. Products not completely unloaded from transporting vehicle.
4. Products placed beyond lines and levels of the required Work.
5. Products remaining on hand after completion of the Work.
6. Loading, hauling, and disposing of rejected products.

1.5 UNIT PRICES

A. Authority: Measurement methods are delineated in individual Specification Sections.

B. Measurement methods delineated in individual Specification Sections complement criteria of this Section. In event of conflict, requirements of individual Specification Section govern.

C. Take measurements and compute quantities. Architect/Engineer will verify measurements and quantities.

D. Unit Quantities: Quantities and measurements indicated on Bid Form are for Contract purposes only. Actual quantities provided shall determine payment.

1. When actual Work requires more or fewer quantities than those quantities indicated, provide required quantities at contracted unit sum/prices.
2. When actual Work requires 25 percent or greater change in quantity than those quantities indicated, Owner or Contractor may claim a Contract Price adjustment.

E. Payment Includes: Full compensation for required labor, products, tools, equipment, plant and facilities, transportation, services and incidentals; erection, application, or installation of item of the Work; overhead and profit.

F. Final payment for Work governed by unit prices will be made on basis of actual measurements and quantities accepted by Architect/Engineer multiplied by unit sum/price for Work incorporated in or made necessary by the Work.

G. Measurement of Quantities:

1. Weigh Scales: Inspected, tested, and certified by applicable State weights and measures department within past year.
2. Platform Scales: Of sufficient size and capacity to accommodate conveying vehicle.
3. Metering Devices: Inspected, tested, and certified by applicable State department within past year.
4. Measurement by Weight: Concrete reinforcing steel, rolled or formed steel, or other metal shapes will be measured by handbook weights. Welded assemblies will be measured by handbook or scale weight.
5. Measurement by Volume: Measured by cubic dimension using mean length, width, and height or thickness.
6. Measurement by Area: Measured by square dimension using mean length and width or radius.
7. Linear Measurement: Measured by linear dimension, at item centerline or mean chord.
8. Stipulated Sum/Price Measurement: Items measured by weight, volume, area, or linear means or combination, as appropriate, as completed item or unit of the Work.

PART 2 - PRODUCTS - Not Used

PART 3 - EXECUTION - Not Used

END OF SECTION 01 20 00

SECTION 01 25 00

SUBSTITUTION PROCEDURES

PART 1 - GENERAL

1.1 SECTION INCLUDES

A. Quality assurance.

B. Product options.

C. Product substitution procedures.

1.2 QUALITY ASSURANCE

A. Contract is based on products and standards established in Contract Documents without consideration of proposed substitutions.

B. Products specified define standard of quality, type, function, dimension, appearance, and performance required.

C. Substitution Proposals: Permitted for specified products except where specified otherwise. Do not substitute products unless substitution has been accepted and approved in writing by Owner.

1.3 PRODUCT OPTIONS

A. See Section 01 60 00 - Product Requirements.

1.4 PRODUCT SUBSTITUTION PROCEDURES

A. Architect/Engineer will consider requests for substitutions only within 15 days after date of Owner-Contractor Agreement.

B. Substitutions may be considered when a product becomes unavailable through no fault of Contractor.

C. Document each request with complete data, substantiating compliance of proposed substitution with Contract Documents, including:

1. Manufacturer's name and address, product, trade name, model, or catalog number, performance and test data, and reference standards.
2. Itemized point-by-point comparison of proposed substitution with specified product, listing variations in quality, performance, and other pertinent characteristics.
3. Reference to Article and Paragraph numbers in Specification Section.

4. Cost data comparing proposed substitution with specified product and amount of net change to Contract Sum.
5. Changes required in other Work.
6. Availability of maintenance service and source of replacement parts as applicable.
7. Certified test data to show compliance with performance characteristics specified.
8. Samples when applicable or requested.
9. Other information as necessary to assist Architect/Engineer's evaluation.

D. A request constitutes a representation that Contractor:

1. Has investigated proposed product and determined that it meets or exceeds quality level of specified product.
2. Will provide same warranty for substitution as for specified product.
3. Will coordinate installation and make changes to other Work that may be required for the Work to be complete with no additional cost to Owner.
4. Waives claims for additional costs or time extension that may subsequently become apparent.
5. Will coordinate installation of the accepted substitute, making such changes as may be required for the Work to be complete in all respects.
6. Will reimburse Owner for review or redesign services associated with reapproval by authorities having jurisdiction.

E. Substitutions will not be considered when they are indicated or implied on Shop Drawing or Product Data submittals without separate written request or when acceptance will require revision to Contract Documents.

F. Substitution Submittal Procedure:

1. Submit requests for substitutions on CSI Form 13.1A Substitution Request-After the Bidding/Negotiating Stage.
2. Submit, via email, a file in PDF format of Request for Substitution for consideration. Limit each request to one proposed substitution.
3. Submit Shop Drawings, Product Data, and certified test results attesting to proposed product equivalence. Burden of proof is on proposer.
4. Architect/Engineer will notify Contractor in writing of decision to accept or reject request.

PART 2 - PRODUCTS - Not Used

PART 3 - EXECUTION - Not Used

END OF SECTION 01 25 00

SECTION 01 30 00

ADMINISTRATIVE REQUIREMENTS

PART 1 - GENERAL

1.1 SECTION INCLUDES

A. Coordination and Project conditions.

B. Preconstruction meeting.

C. Site mobilization meeting.

D. Progress meetings.

E. Preinstallation meetings.

F. Closeout meeting.

G. Alteration procedures.

1.2 COORDINATION AND PROJECT CONDITIONS

A. Coordinate scheduling, submittals, and Work of various Sections of Project Manual to ensure efficient and orderly sequence of installation of interdependent construction elements, with provisions for accommodating items installed later.

B. Verify that utility requirements and characteristics of operating equipment are compatible with building utilities. Coordinate Work of various Sections having interdependent responsibilities for installing, connecting to, and placing operating equipment in service.

C. Coordination Meetings: In addition to other meetings specified in this Section, hold coordination meetings with personnel and Subcontractors to ensure coordination of Work.

D. Coordinate completion and clean-up of Work of separate Sections in preparation for Substantial Completion.

E. After Owner's occupancy of premises, coordinate access to Site for correction of defective Work and Work not complying with Contract Documents, to minimize disruption of Owner's activities.

1.3 PRECONSTRUCTION MEETING

A. Architect/Engineer will schedule and preside over meeting after Notice of Award.

B. Attendance Required: Architect/Engineer, Owner, major Subcontractors, and Contractor.

C. Minimum Agenda:
   1. Submission of executed bonds and insurance certificates.
   2. Distribution of Contract Documents.
   3. Submission of list of Subcontractors, list of products, schedule of values, and Progress Schedule.
   4. Designation of personnel representing parties in Contract and Architect/Engineer.
   5. Communication procedures.
   6. Procedures and processing of requests for interpretations, field decisions, field orders, submittals, substitutions, Applications for Payments, proposal request, Change Orders, and Contract closeout procedures.
   7. Scheduling.
   8. Critical Work sequencing.

D. Contractor: Record minutes and distribute copies to participants within two days after meeting, with two copies each to Architect/Engineer, Owner, and those affected by decisions made.

1.4 PROGRESS MEETINGS

A. Schedule and administer meetings throughout progress of the Work at maximum monthly intervals.

B. Architect/Engineer will make arrangements for meetings, prepare agenda with copies for participants, and preside over meetings.

C. Attendance Required: Job superintendent, major Subcontractors and suppliers, and Architect/Engineer, as appropriate to agenda topics for each meeting.

D. Minimum Agenda:

   1. Review minutes of previous meetings.
   2. Review of Work progress.
   3. Field observations, problems, and decisions.
   4. Identification of problems impeding planned progress.
   5. Review of submittal schedule and status of submittals.
   6. Review of off-Site fabrication and delivery schedules.
   7. Maintenance of Progress Schedule.
   8. Corrective measures to regain projected schedules.
   9. Planned progress during succeeding work period.
   10. Coordination of projected progress.
   11. Maintenance of quality and work standards.
   12. Effect of proposed changes on Progress Schedule and coordination.
   13. Other business relating to Work.

E. Contractor: Record minutes and distribute copies to participants within two days after meeting, with two copies each to Architect/Engineer, Owner, and those affected by decisions made.

1.5 CLOSEOUT MEETING

A. Schedule Project closeout meeting with sufficient time to prepare for requesting Substantial Completion. Preside over meeting and be responsible for minutes.

B. Attendance Required: Contractor, major Subcontractors, Architect/Engineer, Owner, and others appropriate to agenda.

C. Notify Architect/Engineer four days in advance of meeting date.

D. Minimum Agenda:

1. Contractor's inspection of Work.
2. Contractor's preparation of an initial "punch list."
3. Procedure to request Architect/Engineer inspection to determine date of Substantial Completion.
4. Completion time for correcting deficiencies.
5. Inspections by authorities having jurisdiction.
6. Final cleaning.
7. Preparation for final inspection.
8. Closeout Submittals:
9. Final Application for Payment.
10. Contractor's demobilization of Site.
11. Maintenance.

E. Record minutes and distribute copies to participants within two days after meeting, with two copies each to Architect/Engineer, Owner, and those affected by decisions made.

PART 2 - PRODUCTS - Not Used

PART 3 - EXECUTION – Not Used

END OF SECTION 01 30 00

SECTION 01 32 16

CONSTRUCTION PROGRESS SCHEDULE

PART 1 - GENERAL

1.1 SECTION INCLUDES

A. Submittals.

B. Review and evaluation.

C. Updating schedules.

D. Distribution.

1.2 SUBMITTALS

A. Within 10 days after date of Owner-Contractor Agreement, submit proposed preliminary network diagram defining planned operations for first 60 days of Work, with general outline for remainder of Work.

B. Participate in review of preliminary and complete network diagrams jointly with Architect/Engineer.

C. Within 20 days after joint review of proposed preliminary network diagram, submit draft of proposed complete network diagram for review. Include written certification that major Subcontractors have reviewed and accepted proposed schedule.

D. Within 10 days after joint review, submit complete network analysis consisting of network diagrams and mathematical analyses.

E. Submit updated network schedules with each Application for Payment.

F. Submit number of opaque reproductions Contractor requires, plus two copies Architect/Engineer will retain.

G. Submit network schedules under transmittal letter form specified in Section 01 33 00 - Submittal Procedures.

H. Schedule Updates:

1. Overall percent complete, projected and actual.
2. Completion progress by listed activity and subactivity, to within five working days prior to submittal.
3. Changes in Work scope and activities modified since submittal.
4. Delays in submittals or resubmittals, deliveries, or Work.
5. Adjusted or modified sequences of Work.

6. Other identifiable changes.
7. Revised projections of progress and completion.

I. Narrative Progress Report:

1. Submit with each monthly submission of Progress Schedule.
2. Summary of Work completed during the past period between reports.
3. Work planned during the next period.
4. Explanation of differences between summary of Work completed and Work planned in previously submitted report.
5. Current and anticipated delaying factors and estimated impact on other activities and completion milestones.
6. Corrective action taken or proposed.

1.3 REVIEW AND EVALUATION

A. Participate in joint review and evaluation of schedules with Architect/Engineer at each submittal.

B. Evaluate Project status to determine Work behind schedule and Work ahead of schedule.

C. After review, revise schedules incorporating results of review, and resubmit within 10 days.

1.4 UPDATING SCHEDULES

A. Maintain schedules to record actual start and finish dates of completed activities.

B. Indicate progress of each activity to date of revision, with projected completion date of each activity. Update schedules to depict current status of Work.

C. Identify activities modified since previous submittal, major changes in Work, and other identifiable changes.

D. Upon approval of a Change Order, include the change in the next schedule submittal.

E. Indicate changes required to maintain Date of Substantial Completion.

F. Submit sorts as required to support recommended changes.

G. Prepare narrative report to define problem areas, anticipated delays, and impact on schedule. Report corrective action taken or proposed and its effect.

1.5 DISTRIBUTION

A. Following joint review, distribute copies of updated schedules to Contractor's Project site file, to Subcontractors, suppliers, Architect/Engineer, Owner, and other concerned parties.

B. Instruct recipients to promptly report, in writing, problems anticipated by projections shown in schedules.

PART 2 - PRODUCTS - Not Used

PART 3 - EXECUTION - Not Used

END OF SECTION 01 32 16

SECTION 01 33 00

SUBMITTAL PROCEDURES

PART 1 - GENERAL

1.1 SECTION INCLUDES

A. Definitions.

B. Submittal procedures.

C. Construction progress schedules.

D. Proposed product list.

E. Product data.

F. Use of electronic CAD files of Project Drawings.

G. Shop Drawings.

H. Samples.

I. Other submittals.

J. Test reports.

K. Certificates.

L. Manufacturer's instructions.

M. Manufacturer's field reports.

N. Erection Drawings.

O. Contractor review.

P. Architect/Engineer review.

1.2 DEFINITIONS

A. Action Submittals: Written and graphic information and physical samples that require Architect/Engineer's responsive action.

B. Informational Submittals: Written and graphic information and physical Samples that do not require Architect/Engineer's responsive action. Submittals may be rejected for not complying with requirements.

1.3 SUBMITTAL PROCEDURES

A. Transmit each submittal with CSI Form 12.1A - Submittal Transmittal.

B. Sequentially number transmittal forms. Mark revised submittals with original number and sequential alphabetic suffix.

C. Identify: Project, Contractor, Subcontractor and supplier, pertinent Drawing and detail number, and Specification Section number appropriate to submittal.

D. Apply Contractor's stamp, signed or initialed, certifying that review, approval, verification of products required, field dimensions, adjacent construction Work, and coordination of information is according to requirements of the Work and Contract Documents.

E. Schedule submittals to expedite Project, and submit electronic submittals via email as PDF electronic files. Coordinate submission of related items.

F. For each submittal for review, allow 15 days excluding delivery time to and from Contractor.

G. Identify variations in Contract Documents and product or system limitations that may be detrimental to successful performance of completed Work.

H. Allow space on submittals for Contractor and Architect/Engineer review stamps.

I. When revised for resubmission, identify changes made since previous submission.

J. Distribute copies of reviewed submittals as appropriate. Instruct parties to promptly report inability to comply with requirements.

K. Submittals not requested will not be recognized nor processed.

L. Incomplete Submittals: Architect/Engineer will not review. Complete submittals for each item are required. Delays resulting from incomplete submittals are not the responsibility of Architect/Engineer.

1.4 CONSTRUCTION PROGRESS SCHEDULES

A. Comply with Section 01 32 16 - Construction Progress Schedule

1.5 PROPOSED PRODUCT LIST

A. Within 15 days after date of Owner-Contractor Agreement, submit list of major products proposed for use, with name of manufacturer, trade name, and model number of each product.

B. For products specified only by reference standards, indicate manufacturer, trade name, model or catalog designation, and reference standards.

1.6 PRODUCT DATA

A. Product Data: Action Submittal: Submit to Architect/Engineer for review for assessing conformance with information given and design concept expressed in Contract Documents.

B. Submit electronic submittals via email as PDF electronic files.

C. Mark each copy to identify applicable products, models, options, and other data. Supplement manufacturers' standard data to provide information specific to this Project.

D. Indicate product utility and electrical characteristics, utility connection requirements, and location of utility outlets for service for functional equipment and appliances.

E. After review, produce copies and distribute according to "Submittal Procedures" Article and for record documents described in Section 01 70 00 - Execution and Closeout Requirements.

1.7 ELECTRONIC CAD FILES OF PROJECT DRAWINGS

A. Electronic CAD Files of Project Drawings: May only be used to expedite production of Shop Drawings for the Project. Use for other Projects or purposes is not allowed.

B. Electronic CAD Files of Project Drawings: Distributed only under the following conditions:

1. Use of files is solely at receiver's risk. Architect/Engineer does not warrant accuracy of files. Receiving files in electronic form does not relieve receiver of responsibilities for measurements, dimensions, and quantities set forth in Contract Documents. In the event of ambiguity, discrepancy, or conflict between information on electronic media and that in Contract Documents, notify Architect/Engineer of discrepancy and use information in hard-copy Drawings and Specifications.
2. CAD files do not necessarily represent the latest Contract Documents, existing conditions, and as-built conditions. Receiver is responsible for determining and complying with these conditions and for incorporating addenda and modifications.
3. User is responsible for removing information not normally provided on Shop Drawings and removing references to Contract Documents. Shop Drawings submitted with information associated with other trades or with references to Contract Documents will not be reviewed and will be immediately returned.
4. Receiver shall not hold Architect/Engineer responsible for data or file clean-up required to make files usable, nor for error or malfunction in translation, interpretation, or use of this electronic information.
5. Receiver shall understand that even though Architect/Engineer has computer virus scanning software to detect presence of computer viruses, there is no guarantee that computer viruses are not present in files or in electronic media.
6. Receiver shall not hold Architect/Engineer responsible for such viruses or their consequences, and shall hold Architect/Engineer harmless against costs, losses, or damage caused by presence of computer virus in files or media.

1.8 SHOP DRAWINGS

A. Shop Drawings: Action Submittal: Submit to Architect/Engineer for assessing conformance with information given and design concept expressed in Contract Documents.

B. Indicate special utility and electrical characteristics, utility connection requirements, and location of utility outlets for service for functional equipment and appliances.

C. When required by individual Specification Sections, provide Shop Drawings signed and sealed by a professional Engineer responsible for designing components shown on Shop Drawings.

1. Include signed and sealed calculations to support design.
2. Submit Shop Drawings and calculations in form suitable for submission to and approval by authorities having jurisdiction.
3. Make revisions and provide additional information when required by authorities having jurisdiction.

D. Submit electronic submittals via email as PDF electronic files.

E. After review, produce copies and distribute according to "Submittal Procedures" Article and for record documents described in Section 01 70 00 - Execution and Closeout Requirements.

1.9 SAMPLES

A. Samples: Action Submittal: Submit to Architect/Engineer for assessing conformance with information given and design concept expressed in Contract Documents.

B. Samples for Selection as Specified in Product Sections:

1. Submit to Architect/Engineer for aesthetic, color, and finish selection.
2. Submit Samples of finishes, textures, and patterns for Architect/Engineer selection.

C. Submit Samples to illustrate functional and aesthetic characteristics of products, with integral parts and attachment devices. Coordinate Sample submittals for interfacing work.

D. Include identification on each Sample, with full Project information.

E. Submit number of Samples specified in individual Specification Sections; Architect/Engineer will retain one Sample.

F. Reviewed Samples that may be used in the Work are indicated in individual Specification Sections.

G. Samples will not be used for testing purposes unless specifically stated in Specification Section.

H. After review, produce copies and distribute according to "Submittal Procedures" Article and for record documents described in Section 01 70 00 - Execution and Closeout Requirements.

1.10 OTHER SUBMITTALS

A. Closeout Submittals: Comply with Section 01 70 00 - Execution and Closeout Requirements.

B. Informational Submittal: Submit data for Architect/Engineer's knowledge as Contract administrator or for Owner.

C. Submit information for assessing conformance with information given and design concept expressed in Contract Documents.

1.11 TEST REPORTS

A. Informational Submittal: Submit reports for Architect/Engineer's knowledge as Contract administrator or for Owner.

B. Submit test reports for information for assessing conformance with information given and design concept expressed in Contract Documents.

1.12 CERTIFICATES

A. Informational Submittal: Submit certification by manufacturer, installation/application Subcontractor, or Contractor to Architect/Engineer, in quantities specified for Product Data.

B. Indicate material or product conforms to or exceeds specified requirements. Submit supporting reference data, affidavits, and certifications as appropriate.

C. Certificates may be recent or previous test results on material or product but must be acceptable to Architect/Engineer.

1.13 MANUFACTURER'S INSTRUCTIONS

A. Informational Submittal: Submit manufacturer's installation instructions for Architect/Engineer's knowledge as Contract administrator or for Owner.

B. Submit printed instructions for delivery, storage, assembly, installation, adjusting, and finishing, to Architect/Engineer in quantities specified for Product Data.

C. Indicate special procedures, perimeter conditions requiring special attention, and special environmental criteria required for application or installation.

1.14 MANUFACTURER'S FIELD REPORTS

A. Informational Submittal: Submit reports for Architect/Engineer's knowledge as Contract administrator or for Owner.

B. Submit report within 5 days of observation to Architect/Engineer for information.

C. Submit reports for information for assessing conformance with information given and design concept expressed in Contract Documents.

1.15 ERECTION DRAWINGS

A. Informational Submittal: Submit Drawings for Architect/Engineer's knowledge as Contract administrator or for Owner.

B. Submit Drawings for information assessing conformance with information given and design concept expressed in Contract Documents.

C. Data indicating inappropriate or unacceptable Work may be subject to action by Architect/Engineer or Owner.

1.16 CONTRACTOR REVIEW

A. Review for compliance with Contract Documents and approve submittals before transmitting to Architect/Engineer.

B. Contractor: Responsible for:

1. Determination and verification of materials including manufacturer's catalog numbers.
2. Determination and verification of field measurements and field construction criteria.
3. Checking and coordinating information in submittal with requirements of Work and of Contract Documents.
4. Determination of accuracy and completeness of dimensions and quantities.
5. Confirmation and coordination of dimensions and field conditions at Site.
6. Construction means, techniques, sequences, and procedures.
7. Safety precautions.
8. Coordination and performance of Work of all trades.

C. Stamp, sign or initial, and date each submittal to certify compliance with requirements of Contract Documents.

D. Do not fabricate products or begin Work for which submittals are required until approved submittals have been received from Architect/Engineer.

1.17 ARCHITECT/ENGINEER REVIEW

A. Do not make "mass submittals" to Architect/Engineer. "Mass submittals" are defined as six or more submittals or items in one day or 15 or more submittals or items in one week. If "mass submittals" are received, Architect/Engineer's review time stated above will be extended as necessary to perform proper review. Architect/Engineer will review "mass submittals" based on priority determined by Architect/Engineer after consultation with Owner and Contractor.

B. Informational submittals and other similar data are for Architect/Engineer's information, do not require Architect/Engineer's responsive action, and will not be reviewed or returned with comment.

C. Submittals made by Contractor that are not required by Contract Documents may be returned without action.

D. Submittal approval does not authorize changes to Contract requirements unless accompanied by Change Order, Field Order, or Work Change Directive.

PART 2 - PRODUCTS - Not Used

PART 3 - EXECUTION - Not Used

END OF SECTION 01 33 00

SECTION 01 40 00

QUALITY REQUIREMENTS

PART 1 - GENERAL

1.1 SECTION INCLUDES

A. Quality control.

B. Tolerances.

C. References.

D. Labeling.

E. Mockup requirements.

F. Testing and inspection services.

G. Manufacturers' field services.

1.2 QUALITY CONTROL

A. Monitor quality control over suppliers, manufacturers, products, services, Site conditions, and workmanship, to produce Work of specified quality.

B. Comply with specified standards as the minimum quality for the Work except where more stringent tolerances, codes, or specified requirements indicate higher standards or more precise workmanship.

C. Perform Work using persons qualified to produce required and specified quality.

D. Products, materials, and equipment may be subject to inspection by Architect/Engineer and Owner at place of manufacture or fabrication. Such inspections shall not relieve Contractor of complying with requirements of Contract Documents.

E. Supervise performance of Work in such manner and by such means to ensure that Work, whether completed or in progress, will not be subjected to harmful, dangerous, damaging, or otherwise deleterious exposure during construction period.

1.3 TOLERANCES

A. Monitor fabrication and installation tolerance control of products to produce acceptable Work. Do not permit tolerances to accumulate.

B. Comply with manufacturers' recommended tolerances and tolerance requirements in reference standards. When such tolerances conflict with Contract Documents, request clarification from Architect/Engineer before proceeding.

C. Adjust products to appropriate dimensions; position before securing products in place.

1.4 REFERENCES

A. For products or workmanship specified by association, trade, or other consensus standards, comply with requirements of standard except when more rigid requirements are specified or are required by applicable codes.

B. Conform to reference standard by date of issue current as of date of Contract Documents except where specific date is established by code.

C. Obtain copies of standards and maintain on Site when required by product Specification Sections.

D. When requirements of indicated reference standards conflict with Contract Documents, request clarification from Architect/Engineer before proceeding.

E. Neither contractual relationships, duties, or responsibilities of parties in Contract nor those of Architect/Engineer shall be altered from Contract Documents by mention or inference in reference documents.

1.5 LABELING

A. Attach label from agency approved by authorities having jurisdiction for products, assemblies, and systems required to be labeled by applicable code.

B. Label Information: Include manufacturer's or fabricator's identification, approved agency identification, and the following information, as applicable, on each label:

1. Model number.
2. Serial number.
3. Performance characteristics.

C. Manufacturer's Nameplates, Trademarks, Logos, and Other Identifying Marks on Products: Not allowed on surfaces exposed to view in public areas, interior or exterior.

1.6 MOCK-UP REQUIREMENTS

A. Tests will be performed under provisions identified in this Section and identified in individual product Specification Sections.

B. Assemble and erect specified or indicated items with specified or indicated attachment and anchorage devices, flashings, seals, and finishes.

C. Accepted mockups shall be comparison standard for remaining Work.

D. Where mockup has been accepted by Architect/Engineer and is specified in product Specification Sections to be removed, remove mockup and clear area when directed to do so by Architect/Engineer.

1.7 TESTING AND INSPECTION SERVICES

A. Owner will employ and pay for specified services of an independent firm to perform testing and inspection.

B. Independent firm will perform tests, inspections, and other services specified in individual Specification Sections and as required by authorities having jurisdiction.

1. Laboratory: Authorized to operate in State of Michigan.
2. Laboratory Staff: Maintain full-time Professional Engineer on staff to review services.
3. Testing Equipment: Calibrated at reasonable intervals with devices of an accuracy traceable to National Bureau of Standards or accepted values of natural physical constants.

C. Testing, inspections, and source quality control may occur on or off Project Site. Perform off-Site testing as required by Architect/Engineer or Owner.

D. Reports shall be submitted by independent firm to Architect/Engineer, Contractor, and authorities having jurisdiction, in duplicate, indicating observations and results of tests and compliance or noncompliance with Contract Documents.

1. Submit final report indicating correction of Work previously reported as noncompliant.

E. Cooperate with independent firm; furnish samples of materials, design mix, equipment, tools, storage, safe access, and assistance by incidental labor as requested.

1. Notify Architect/Engineer and independent firm 48 hours before expected time for operations requiring services.
2. Make arrangements with independent firm and pay for additional Samples and tests required for Contractor's use.

F. Employment of testing agency or laboratory shall not relieve Contractor of obligation to perform Work according to requirements of Contract Documents.

G. Retesting or re-inspection required because of nonconformance with specified or indicated requirements shall be performed by same independent firm on instructions from Architect/Engineer. Payment for retesting or re-inspection will be charged to Contractor by deducting testing charges from Contract Sum/Price.

H. Agency Responsibilities:

1. Test Samples of mixes submitted by Contractor.
2. Provide qualified personnel at Site. Cooperate with Architect/Engineer and Contractor in performance of services.
3. Perform indicated sampling and testing of products according to specified standards.
4. Ascertain compliance of materials and mixes with requirements of Contract Documents.

5. Promptly notify Architect/Engineer and Contractor of observed irregularities or nonconformance of Work or products.
6. Perform additional tests required by Architect/Engineer.
7. Attend preconstruction meetings and progress meetings.

I. Agency Reports: After each test, promptly submit two copies of report to Architect/Engineer, Contractor, and authorities having jurisdiction. When requested by Architect/Engineer, provide interpretation of test results. Include the following:

1. Date issued.
2. Project title and number.
3. Name of inspector.
4. Date and time of sampling or inspection.
5. Identification of product and Specification Section.
6. Location in Project.
7. Type of inspection or test.
8. Date of test.
9. Results of tests.
10. Conformance with Contract Documents.

J. Limits on Testing Authority:

1. Agency or laboratory may not release, revoke, alter, or enlarge on requirements of Contract Documents.
2. Agency or laboratory may not approve or accept any portion of the Work.
3. Agency or laboratory may not assume duties of Contractor.
4. Agency or laboratory has no authority to stop the Work.

1.8 MANUFACTURER'S FIELD SERVICES

A. When specified in individual Specification Sections, require material or product suppliers or manufacturers to provide qualified staff personnel to observe Site conditions, conditions of surfaces and installation, and quality of workmanship, as applicable, and to initiate instructions when necessary.

B. Submit qualifications of observer to Architect/Engineer 30 days in advance of required observations. Observer is subject to approval of Architect/Engineer.

C. Report observations and Site decisions or instructions given to applicators or installers that are supplemental or contrary to manufacturer's written instructions.

D. Refer to Section 01 33 00 - Submittal Procedures, "Manufacturer's Field Reports" Article.

PART 2 - PRODUCTS - Not Used

PART 3 - EXECUTION - Not Used

END OF SECTION 01 40 00

SECTION 01 50 00

TEMPORARY FACILITIES AND CONTROLS

PART 1 - GENERAL

1.1 SECTION INCLUDES

A. Temporary Utilities:

1. Temporary electricity.

B. Construction Facilities:
1. Vehicular access.
2. Parking.
3. Progress cleaning and waste removal.
4. Traffic regulation.

C. Temporary Controls:

1. Barriers.
2. Enclosures and fencing.
3. Security.
4. Water control.
5. Dust control.
6. Erosion and sediment control.
7. Noise control.

1.2 REFERENCES

A. ASTM International:

1. ASTM E 84 - Standard Test Method for Surface Burning Characteristics of Building Materials.
2. ASTM E 90 - Standard Test Method for Laboratory Measurement of Airborne Sound Transmission Loss of Building Partitions and Elements.
3. ASTM E 119 - Standard Test Methods for Fire Tests of Building Construction and Materials.

1.3 TEMPORARY ELECTRICITY

A. Provide and pay for power service required from utility source as needed for construction operation.

B. Complement existing power service capacity and characteristics as required for construction operations.

1.4 PARKING

A. If Site space is not adequate, provide additional off-Site parking.

B. Permanent Pavements and Parking Facilities:
   1. Avoid traffic loading beyond paving design capacity. Tracked vehicles are not allowed.

C. Maintenance:

   1. Maintain traffic and parking areas in sound condition free of excavated material, construction equipment, products, mud, snow, ice, and the like.
   2. Maintain existing and permanent paved areas used for construction; promptly repair breaks, potholes, low areas, standing water, and other deficiencies, to maintain paving and drainage in original condition.

D. Mud from Site vehicles: Provide means of removing mud from vehicle wheels before entering streets.

1.5 PROGRESS CLEANING AND WASTE REMOVAL

A. Maintain areas free of waste materials, debris, and rubbish. Maintain Site in clean and orderly condition.

B. Collect and remove waste materials, debris, and rubbish from Site periodically and dispose of off-Site.

1.6 TRAFFIC REGULATION

A. Signs, Signals, and Devices:

   1. Post-Mounted and Wall-Mounted Traffic Control and Informational Signs: As approved by authorities having jurisdiction.
   2. Traffic Cones, Drums, Flares, and Lights: As approved by authorities having jurisdiction.
   3. Flag Person Equipment: As required by authorities having jurisdiction.

B. Flag Persons: Provide trained and equipped flag persons to regulate traffic when construction operations or traffic encroach on public traffic lanes.

C. Haul Routes:

   1. Consult with authorities having jurisdiction and establish public thoroughfares to be used for haul routes and Site access.
   2. Confine construction traffic to designated haul routes.
   3. Provide traffic control at critical areas of haul routes to regulate traffic and to minimize interference with public traffic.

D. Traffic Signs and Signals:

   1. Provide signs at approaches to Site and on Site, at crossroads, detours, parking areas, and elsewhere as needed to direct construction and affected public traffic.

2. Relocate signs and signals as Work progresses, to maintain effective traffic control.

E. Removal:

1. Remove equipment and devices when no longer required.
2. Repair damage caused by installation.
3. Remove post settings to depth of 2 feet.

1.7 BARRIERS

A. Provide barriers to prevent unauthorized entry to construction areas, to allow for Owner's use of Site, and to protect existing facilities and adjacent properties from damage from construction operations and demolition.

B. Tree and Plant Protection: Preserve and protect existing trees and plants designated to remain.

1. Protect areas within drip lines from traffic, parking, storage, dumping, chemically injurious materials and liquids, ponding, and continuous running water.
2. Replace trees and plants damaged by construction operations.

C. Protect non-owned vehicular traffic, stored materials, Site, and structures from damage.

1.8 ENCLOSURES AND FENCING

A. Construction: Contractor's option.

B. Exterior Enclosures: Contractor’s option

1.9 SECURITY

A. Security Program:

1. Protect Work on existing premises from theft, vandalism, and unauthorized entry.

1.10 WATER CONTROL

A. Grade Site to drain. Maintain excavations free of water. Provide, operate, and maintain necessary pumping equipment.

1.11 DUST CONTROL

A. Execute Work by methods that minimize raising dust from construction operations.

B. Provide positive means to prevent airborne dust from dispersing into atmosphere.

1.12 EROSION AND SEDIMENT CONTROL

A. Plan and execute construction by methods to control surface drainage from cuts and fills from borrow and waste disposal areas. Prevent erosion and sedimentation.

B. Minimize surface area of bare soil exposed at one time.

C. Provide temporary measures including berms, dikes, drains, and other devices to prevent water flow.

D. Construct fill and waste areas by selective placement to avoid erosive surface silts and clays.

E. Periodically inspect earthwork to detect evidence of erosion and sedimentation. Promptly apply corrective measures.

1.13 NOISE CONTROL

A. Provide methods, means, and facilities to minimize noise produced by construction operations.

PART 2 - PRODUCTS - Not Used

PART 3 - EXECUTION - Not Used

END OF SECTION 01 50 00

SECTION 01 60 00

PRODUCT REQUIREMENTS

PART 1 - GENERAL

1.1 SECTION INCLUDES

A. Products.

B. Product delivery requirements.

C. Product storage and handling requirements.

D. Product options.

E. Equipment electrical characteristics and components.

1.2 PRODUCTS

A. At minimum, comply with specified requirements and reference standards.

B. Specified products define standard of quality, type, function, dimension, appearance, and performance required.

C. Furnish products of qualified manufacturers that are suitable for intended use. Furnish products of each type by single manufacturer unless specified otherwise. Confirm that manufacturer's production capacity can provide sufficient product, on time, to meet Project requirements.

D. Do not use materials and equipment removed from existing premises except as specifically permitted by Contract Documents.

E. Furnish interchangeable components from same manufacturer for components being replaced.

1.3 PRODUCT DELIVERY REQUIREMENTS

A. Comply with delivery requirements in Section 01 74 19 - Construction Waste Management and Disposal.

B. Transport and handle products according to manufacturer's instructions.

C. Promptly inspect shipments to ensure products comply with requirements, quantities are correct, and products are undamaged.

D. Provide equipment and personnel to handle products; use methods to prevent soiling, disfigurement, or damage.

1.4 PRODUCT STORAGE AND HANDLING REQUIREMENTS

A. Store and protect products according to manufacturer's instructions.

B. Store products with seals and labels intact and legible.

C. Store sensitive products in weathertight, climate-controlled enclosures in an environment suitable to product.

D. For exterior storage of fabricated products, place products on sloped supports aboveground.

E. Provide off-Site storage and protection when Site does not permit on-Site storage or protection.

F. Cover products subject to deterioration with impervious sheet covering. Provide ventilation to prevent condensation and degradation of products.

G. Store loose granular materials on solid flat surfaces in well-drained area. Prevent mixing with foreign matter.

H. Provide equipment and personnel to store products; use methods to prevent soiling, disfigurement, or damage.

I. Arrange storage of products to permit access for inspection. Periodically inspect to verify products are undamaged and are maintained in acceptable condition.

1.5 PRODUCT OPTIONS

A. Products Specified by Reference Standards or by Description Only: Products complying with specified reference standards or description.

B. Products Specified by Naming One or More Manufacturers: Products of one of manufacturers named and complying with Specifications; no options or substitutions allowed.

C. Products Specified by Naming One or More Manufacturers with Provision for Substitutions: Submit Request for Substitution for any manufacturer not named, according to Section 01 25 00 - Substitution Procedures.

PART 2 - PRODUCTS – Not Used

PART 3 - EXECUTION - Not Used

END OF SECTION 01 60 00

SECTION 01 70 00

EXECUTION AND CLOSEOUT REQUIREMENTS

PART 1 - GENERAL

1.1 SECTION INCLUDES

A. Field engineering.

B. Closeout procedures.

C. Manual for equipment and systems.

D. Product warranties and product bonds.

E. Examination.

F. Preparation.

G. Execution.

H. Protecting installed construction.

I. Final cleaning.

1.2 FIELD ENGINEERING

A. Owner will locate and Contractor shall protect survey control and reference points. Promptly notify Architect/Engineer of discrepancies discovered.

B. Control datum for survey is indicated on Drawings.

C. Verify setbacks and easements; confirm Drawing dimensions and elevations.

D. Provide field engineering services. Establish elevations, lines, and levels using recognized engineering survey practices.

E. Maintain complete and accurate log of control and survey Work as Work progresses.

F. Protect survey control points prior to starting Site Work; preserve permanent reference points during construction.

G. Promptly report to Architect/Engineer loss or destruction of reference point or relocation required because of changes in grades or other reasons.

H. Replace dislocated survey control points based on original survey control. Make no changes without prior written notice to Architect/Engineer.

1.3 CLOSEOUT PROCEDURES

A. Prerequisites to Substantial Completion: Complete following items before requesting Certification of Substantial Completion, either for entire Work or for portions of Work:

1. Submit maintenance manuals, Project record documents, and other similar final record data in compliance with this Section.
2. Complete facility startup, testing, adjusting, balancing of systems and equipment, demonstrations, and instructions to Owner's operating and maintenance personnel as specified in compliance with this Section.
3. Conduct inspection to establish basis for request that Work is substantially complete. Create comprehensive list (initial punch list) indicating items to be completed or corrected, value of incomplete or nonconforming Work, reason for being incomplete, and date of anticipated completion for each item. Include copy of list with request for Certificate of Substantial Completion.
4. Obtain and submit releases enabling Owner's full, unrestricted use of Project and access to services and utilities. Include certificate of occupancy, operating certificates, and similar releases from authorities having jurisdiction and utility companies.
5. Deliver tools, spare parts, extra stocks of material, and similar physical items to Owner.
6. Discontinue or change over and remove temporary facilities and services from Project Site, along with construction tools, mockups, and similar elements.
7. Perform final cleaning according to this Section.

B. Substantial Completion Inspection:

1. When Contractor considers Work to be substantially complete, submit to Architect/Engineer:

    a. Written certificate that Work, or designated portion, is substantially complete.
    b. List of items to be completed or corrected (initial punch list).

2. Within seven days after receipt of request for Substantial Completion, Architect/Engineer will make inspection to determine whether Work or designated portion is substantially complete.
3. Should Architect/Engineer determine that Work is not substantially complete:

    a. Architect/Engineer will promptly notify Contractor in writing, stating reasons for its opinion.
    b. Contractor shall remedy deficiencies in Work and send second written request for Substantial Completion to Architect/Engineer.
    c. Architect/Engineer will reinspect Work.
    d. Redo and Inspection of Deficient Work: Repeated until Work passes Architect/Engineer's inspection.

4. When Architect/Engineer finds that Work is substantially complete, Architect/Engineer will:

    a. Prepare Certificate of Substantial Completion on EJCDC C-625 - Certificate of Substantial Completion, accompanied by Contractor's list of items to be completed or corrected as verified and amended by Architect/Engineer and Owner (final punch list).

b. Submit Certificate to Owner and Contractor for their written acceptance of responsibilities assigned to them in Certificate.

5. After Work is substantially complete, Contractor shall:

a. Allow Owner occupancy of Project under provisions stated in Certificate of Substantial Completion.
b. Complete Work listed for completion or correction within time period stipulated.

C. Prerequisites for Final Completion: Complete following items before requesting final acceptance and final payment.

1. When Contractor considers Work to be complete, submit written certification that:

a. Contract Documents have been reviewed.
b. Work has been examined for compliance with Contract Documents.
c. Work has been completed according to Contract Documents.
d. Work is completed and ready for final inspection.

2. Submittals: Submit following:

a. Final punch list indicating all items have been completed or corrected.
b. Final payment request with final releases and supporting documentation not previously submitted and accepted. Include certificates of insurance for products and completed operations where required.
c. Specified warranties, workmanship/maintenance bonds, maintenance agreements, and other similar documents.
d. Accounting statement for final changes to Contract Sum.

3. Perform final cleaning for Contractor-soiled areas according to this Section.

D. Final Completion Inspection:

1. Within seven days after receipt of request for final inspection, Architect/Engineer will make inspection to determine whether Work or designated portion is complete.
2. Should Architect/Engineer consider Work to be incomplete or defective:

a. Architect/Engineer will promptly notify Contractor in writing, listing incomplete or defective Work.
b. Contractor shall remedy stated deficiencies and send second written request to Architect/Engineer that Work is complete.
c. Architect/Engineer will reinspect Work.
d. Redo and Inspection of Deficient Work: Repeated until Work passes Architect/Engineer's inspection.

1.4 MANUAL FOR EQUIPMENT AND SYSTEMS

A. Submit two copies of preliminary draft or proposed formats and outlines of contents before start of Work. Architect/Engineer will review draft and return one copy with comments.

B. For equipment, or component parts of equipment put into service during construction and operated by Owner, submit documents within ten days after acceptance.

C. Submit one copy of completed volumes before Substantial Completion. Draft copy will be reviewed and returned after Substantial Completion, with Architect/Engineer comments. Revise content of document sets as required prior to final submission.

D. Submit in PDF composite electronic indexed file of final manual within ten days after final inspection.

E. Maintenance Requirements: Include routine procedures and guide for preventative maintenance and troubleshooting; disassembly, repair, and reassembly instructions; and alignment, adjusting, balancing, and checking instructions.

1.5 PRODUCT WARRANTIES AND PRODUCT BONDS

A. Obtain warranties and bonds executed in duplicate by responsible Subcontractors, suppliers, and manufacturers within ten days after completion of applicable item of Work.

B. Execute and assemble transferable warranty documents and bonds from Subcontractors, suppliers, and manufacturers.

C. Verify documents are in proper form, contain full information, and are notarized.

D. Co-execute submittals when required.

E. Submit prior to final Application for Payment.

F. Time of Submittals:

1. For equipment or component parts of equipment put into service during construction with Owner's permission, submit documents within ten days after acceptance.
2. Make other submittals within ten days after date of Substantial Completion, prior to final Application for Payment.
3. For items of Work for which acceptance is delayed beyond Substantial Completion, submit within ten days after acceptance, listing date of acceptance as beginning of warranty or bond period.

PART 2 - PRODUCTS - Not Used

PART 3 - EXECUTION

3.1 EXAMINATION

A. Verify that existing Site conditions and substrate surfaces are acceptable for subsequent Work. Beginning new Work means acceptance of existing conditions.

B. Verify that existing substrate is capable of structural support or attachment of new Work being applied or attached.

C. Examine and verify specific conditions described in individual Specification Sections.

D. Verify that utility services are available with correct characteristics and in correct locations.

3.2 PREPARATION

A. Clean substrate surfaces prior to applying next material or substance according to manufacturer's instructions.

B. Seal cracks or openings of substrate prior to applying next material or substance.

C. Apply manufacturer-required or -recommended substrate primer, sealer, or conditioner prior to applying new material or substance in contact or bond.

3.3 EXECUTION

A. Comply with manufacturer's installation instructions, performing each step in sequence. Maintain one set of manufacturer's installation instructions at Project Site during installation and until completion of construction.

B. When manufacturer's installation instructions conflict with Contract Documents, request clarification from Architect/Engineer before proceeding.

C. Verify that field measurements are as indicated on approved Shop Drawings or as instructed by manufacturer.

D. Secure products in place with positive anchorage devices designed and sized to withstand stresses, vibration, physical distortion, or disfigurement.

1. Secure Work true to line and level and within specified tolerances, or if not specified, industry-recognized tolerances.
2. Physically separate products in place, provide electrical insulation, or provide protective coatings to prevent galvanic action or corrosion between dissimilar metals.
3. Exposed Joints: Provide uniform joint width and arrange to obtain best visual effect. Refer questionable visual-effect choices to Architect/Engineer for final decision.

E. Allow for expansion of materials and building movement.

F. Climatic Conditions and Project Status: Install each unit of Work under conditions to ensure best possible results in coordination with entire Project.

1. Isolate each unit of Work from incompatible Work as necessary to prevent deterioration.
2. Coordinate enclosure of Work with required inspections and tests to minimize necessity of uncovering Work for those purposes.

G. Mounting Heights: Where not indicated, mount individual units of Work at industry recognized standard mounting heights for particular application indicated.

1. Refer questionable mounting heights choices to Architect/Engineer for final decision.
2. Elements Identified as Accessible to Handicapped: Comply with applicable codes and regulations.

H. Adjust operating products and equipment to ensure smooth and unhindered operation.

I. Clean and perform maintenance on installed Work as frequently as necessary through remainder of construction period. Lubricate operable components as recommended by manufacturer.

3.4 PROTECTING INSTALLED CONSTRUCTION

A. Protect installed Work and provide special protection where specified in individual Specification Sections.

B. Provide temporary and removable protection for installed products. Control activity in immediate Work area to prevent damage.

C. Provide protective coverings at walls, projections, jambs, sills, and soffits of openings.

D. Use durable sheet materials to protect finished floors, stairs, and other surfaces from traffic, dirt, wear, damage, or movement of heavy objects.

E. Prohibit traffic or storage upon waterproofed or roofed surfaces. When traffic or activity is necessary, obtain recommendations for protection from waterproofing or roofing material manufacturer.

F. Prohibit traffic from landscaped areas.

3.5 FINAL CLEANING

A. Execute final cleaning prior to final Project assessment.

1. Employ experienced personnel or professional cleaning firm.

B. Clean Site; sweep paved areas, rake clean landscaped surfaces.

C. Remove waste and surplus materials, rubbish, and construction facilities from Site.

END OF SECTION 01 70 00

SECTION 11 68 23.33

TENNIS AND PICKLEBALL EQUIPMENT

PART 1 - GENERAL

1.1 SUMMARY

A. Section Includes:
   1. Pre-Manufactured Equipment – Tennis and Pickleball Court Nets and Posts

1.2 SUBMITTALS

A. Furnish complete product information for all recreational facility items for the project to Engineer for approval.

B. Submit product data and shop drawings for approval.

1.3 UNIT PRICE – MEASUREMENT AND PAYMENT

A. Tennis Court Equipment
   1. Basis of Measurement: By Each
   2. Basis of Payment: Includes all associate labor, materials, freight, delivery, equipment, and assembly for a complete installation of the specified tennis equipment. Includes excavation, pavement coring, grading, formwork, concrete, finishing.

B. Pickleball Court Equipment
   1. Basis of Measurement: By Each
   2. Basis of Payment: Includes all associate labor, materials, freight, delivery, equipment, and assembly for a complete installation of the specified tennis equipment. Includes excavation, pavement coring, grading, formwork, concrete, finishing.

PART 2 - PRODUCTS

2.1 TENNIS COURT MATERIALS

A. Manufacturer: Douglas Sports Equipment
   1. Tennis Nets: TN-30DM
   2. Center Strap: #20600
   3. Center Strap Ground Anchor: #63428
   4. Posts: Premier RD

2.2 PICKLEBALL COURT MATERIALS

A. Manufacturer: Douglas Sports Equipment
   1. Pickleball Nets: JTN-30
   2. Posts: Premier RD

2.3 CONCRETE FOR POSTS

A. Follow recommendation of post manufacturer

B. Submit material and product data to Engineer for review prior to use.

PART 3 - EXECUTION

3.1 PREPARATION

A. Review all manufacturer installation guidelines and recommendations

3.2 STORAGE

A. All equipment shall be stored in original manufacturer containers and protected from construction conditions, weather, theft, and vandalism until time of installation

3.3 INSTALLATION

A. Assemble equipment components according to manufacturer instructions, installation guidelines, and recommendations

B. Replace all damaged components prior to final acceptance.

C. Finish according to specific use requirements.

END OF SECTION 11 68 23.33

SECTION 31 05 13

SOILS FOR EARTHWORK

PART 1 - GENERAL

1.1 SUMMARY

A. Section Includes:
   1. Topsoil materials.

B. Related Requirements:

   1. Section 31 05 16 – Aggregates for Earthwork
   2. Section 31 23 16 – Excavation
   3. Section 31 23 23 – Fill
   4. Section 32 91 19 – Landscape Grading
   5. Section 32 92 19 – Seeding

1.2 SUBMITTALS

A. Section 01 33 00 - Submittal Procedures: Requirements for submittals.

B. Product Data: Submit name of imported materials source.

C. Supplier's Certificate: Certify that products meet or exceed specified requirements.

1.3 QUALITY ASSURANCE

A. Furnish each subsoil and topsoil material from single source throughout Work.

B. Perform Work according to Michigan Department of Transportation standards.

PART 2 - PRODUCTS

2.1 MATERIALS

A. Topsoil:

   1. Comply with Michigan Department of Transportation standard.

2.2 SOURCE QUALITY CONTROL

A. Section 01 40 00 - Quality Requirements: Requirements for testing, inspection, and analysis.

B. Owner Inspection:

1. Make topsoil available for inspection at source prior to packaging for shipment.
2. Notify Owner at least seven days before inspection is allowed.

C. Owner Witnessing:

1. Allow witnessing of source testing at supplier's test facility.
2. Notify Owner at least seven days before tests are scheduled.

D. Certificate of Compliance:

1. If supplier is approved by authorities having jurisdiction, submit certificate of compliance indicating Work performed at source conforms to Contract Documents.
2. Specified source tests are not required for Work performed by approved supplier.

PART 3 - EXECUTION

3.1 INSTALLATION

A. Excavation:

1. Excavate topsoil from designated areas.
2. Strip topsoil to full depth of topsoil in designated areas.
3. Remove excess excavated materials not intended for reuse from Site.
4. Remove excavated materials not meeting requirements for topsoil materials from Site.

B. Stockpiling:

1. Stockpile excavated material meeting requirements for topsoil materials.
2. Stockpile in sufficient quantities to meet Project schedule and requirements.
3. Separate differing materials with dividers or stockpile apart to prevent intermixing of soil types or contamination.
4. Direct surface water away from stockpile to prevent erosion or deterioration of materials.

3.2 CLEANING

A. Section 01 70 00 - Execution and Closeout Requirements: Requirements for cleaning.

B. Stockpile:

1. Remove stockpile and leave area in clean and neat condition.
2. Grade Site surface to prevent freestanding surface water.

END OF SECTION 31 05 13

SECTION 31 05 16

AGGREGATES FOR EARTHWORK

PART 1 - GENERAL

1.1 SUMMARY

A. Section Includes:

1. Aggregate materials.

B. Related Requirements:

1. Section 31 23 16 - Excavation
2. Section 31 23 23 - Fill

1.2 REFERENCE STANDARDS

A. American Association of State Highway and Transportation Officials:
1. AASHTO T 180 - Standard Method of Test for Moisture-Density Relations of Soils Using a 4.54-kg (10-lb) Rammer and a 457-mm (18-in.) Drop.

1.3 SUBMITTALS

A. Section 01 33 00 - Submittal Procedures: Requirements for submittals.

B. Product Data: Submit name of imported materials source.

C. Supplier's Certificate: Certify that products meet or exceed specified requirements.

1.4 QUALITY ASSURANCE

A. Furnish each aggregate material from single source throughout Work.

B. Perform Work according to Michigan Department of Transportation standards.

C. Maintain one copy of each standard affecting Work of this Section on Site.

PART 2 - PRODUCTS

2.1 MATERIALS

A. Aggregate:

1. MDOT 22A Crushed Limestone: Comply with Michigan Department of Transportation

2.2 SOURCE QUALITY CONTROL

A. Section 01 40 00 - Quality Requirements: Requirements for testing, inspection, and analysis.

B. Testing and Analysis:

1. Comply with AASHTO T 180.
2. If tests indicate materials do not meet specified requirements, change material and retest.

C. Owner Inspection:

1. Notify Owner at least seven days before inspection is allowed.

D. Owner Witnessing:

1. Allow witnessing of source testing at supplier's test facility.
2. Notify Owner at least seven days before tests are scheduled.

E. Certificate of Compliance:

1. If supplier is approved by authorities having jurisdiction, submit certificate of compliance indicating Work performed at source conforms to Contract Documents.
2. Specified source tests are not required for Work performed by approved supplier.

PART 3 - EXECUTION

3.1 INSTALLATION

A. Excavation:

1. Remove excess excavated aggregate materials not intended for reuse from Site.
2. Remove excavated materials not meeting requirements for aggregate from Site.

B. Stockpiling:

1. Stockpile excavated material meeting requirements for aggregate materials.
2. Stockpile in sufficient quantities to meet Project schedule and requirements.
3. Separate different aggregate materials with dividers or stockpile apart to prevent intermixing of aggregate types or contamination.
4. Direct surface water away from stockpile site to prevent erosion or deterioration of materials.

3.2 CLEANING

A. Section 01 70 00 - Execution and Closeout Requirements: Requirements for cleaning.

B. Stockpile:

1. Remove stockpile and leave area in clean and neat condition.

2. Grade Site surface to prevent freestanding surface water.

END OF SECTION 31 05 16

SECTION 31 10 00

SITE CLEARING

PART 1 - GENERAL

1.1 SUMMARY

A. Section Includes:

1. Removing HMA pavement
2. Removing Tennis equipment
3. Removing fencing
4. Excavating topsoil.

1.2 UNIT PRICE - MEASUREMENT AND PAYMENT

A. HMA Surface Removal:

1. Basis of Measurement: By square yard.
2. Basis of Payment: Includes removing HMA surface, edge cutting to establish a neat line, and removal and disposal of HMA material.

B. Tennis Equipment Removal:
1. Basis of Measurement: By lump sum.
2. Basis of Payment: Includes removing and disposing of all equipment and appurtenances related to the tennis net and posts.

C. Fence Removal:
1. Basis of Measurement: By Lineal Foot.
2. Basis of Payment: Includes the complete removal and disposal of chain link fence, posts, gates, foundations/footings, and all appurtenances, hardware, fittings, caps, etc. Care shall be taken to salvage the fencing fabric for re-use where possible. Contractor shall store fencing fabric in a location and manner that will protect it for re-use. Engineer will measure removal by lineal foot horizontally along the path of the existing fence.

1.3 QUALITY ASSURANCE

A. Perform Work in accordance with Michigan Department of Transportation standards.

B. Maintain one copy of document on site.

PART 2 - EXECUTION

2.1 EXAMINATION

A. Section 01 30 00 - Administrative Requirements: Verification of existing conditions before starting work.

B. Verify existing plant life designated to remain is tagged or identified.

C. Identify salvage area for placing removed materials.

2.2 PREPARATION

A. Call MissDIG not less than three working days before performing Work.

1. Request underground utilities to be located and marked within and surrounding construction areas.

2.3 PROTECTION

A. Locate, identify, and protect utilities indicated to remain, from damage.

B. Protect trees, plant growth, and features designated to remain, as final landscaping as specified in Section 01 50 00 - Temporary Facilities and Controls.

C. Protect bench marks, survey control points, and existing structures from damage or displacement.

2.4 REMOVAL

A. Remove pavement, fencing, fence gates, and tennis equipment as indicated on Drawings. Neatly saw cut edges at right angle to surface where adjacent pavement is to remain. Backfill holes from the fence post footings with suitable material. Native material taken from the site may be used with Engineer's approval.

B. Continuously clean-up and remove waste materials from site. Do not allow materials to accumulate on site.

2.5 SCHEDULES

A. Remove the following materials:

1. HMA playing surface
2. HMA walk
3. Tennis equipment

B. Protect the following materials:

1. Trees.
2. Benches.
3. Waste receptacles.
4. Signs.
5. Other park features not indicated for removal.

END OF SECTION 31 10 00

SECTION 31 23 16

EXCAVATION

PART 1 - GENERAL

1.1 SUMMARY

A. Section Includes:

1. Soil densification.
2. Excavating for fence footings.

B. Related Requirements:

1. Section 31 05 13 - Soils for Earthwork
2. Section 31 05 16 - Aggregates for Earthwork
3. Section 31 23 23 - Fill

1.2 REFERENCE STANDARDS

A. Local utility standards when working within 48 inches of utility lines.

PART 2 - PRODUCTS

2.1 Not Used.

PART 3 - EXECUTION

3.1 PREPARATION

A. Section 01 70 00 - Execution and Closeout Requirements: Requirements for installation preparation.

B. Utility Service Locator:

1. Call MissDIG not less than three working days before performing Work.
2. Request that underground utilities be located and marked within and immediately surrounding Site.
3. Identify required lines, levels, contours, and data.

C. Existing Utilities:

1. Notify utility company to remove and relocate utilities.

2. Protect from damage utilities indicated to remain.

D. Protect plant life, lawns, rock outcroppings, and other features designated to remain as portion of final landscaping.

E. Protect benchmarks, survey control points, existing structures, fences, sidewalks, paving, and curbs from excavating equipment and vehicular traffic.

F. Do not close or obstruct roadways without permits.

G. Erect and maintain temporary barriers and security devices, including warning signs, warning lights, and similar measures, for protection of public, Owner, and existing improvements indicated to remain.

3.2 SOIL DENSIFICATION BY VIBRO-COMPACTION

A. Description:

1. Vibro-compact substrates below footing bearing surfaces for footings as indicated on Drawings before excavating Site.
2. Densify existing subsoils with existing relative density rating of "compact to dense" to attain relative density rating of "very dense."

3.3 EXCAVATION

A. Excavate subsoil to accommodate fence footings.

B. Compact disturbed load-bearing soil in direct contact with foundations to original bearing capacity.

C. Grade top perimeter of excavation to prevent surface water from draining into excavation.

D. Trim excavation and remove loose matter.

E. Removal of Deleterious Materials:
1. Remove excess and unsuitable material from Site.

F. Notify Architect/Engineer of unexpected subsurface conditions.

G. Correct over-excavated areas as directed by Engineer.

H. Remove excavated material from Site.

I. Repair or replace items indicated to remain that have been damaged by excavation.

3.4 FIELD QUALITY CONTROL

A. Section 01 70 00 - Execution and Closeout Requirements: Requirements for testing, adjusting, and balancing.

B. Inspecting: Request visual inspection of bearing surfaces by Engineer before installing subsequent Work.

3.5 PROTECTION

A. Section 01 70 00 - Execution and Closeout Requirements: Requirements for protecting finished Work.

B. Prevent displacement or loose soil from falling into excavation and maintain soil stability.

C. Protect bottom of excavations and soil adjacent to and beneath foundation from freezing.

D. Protect structures, utilities, and other facilities from damage caused by settlement, lateral movement, undermining, washout, and other hazards that may be created by earth operations.

END OF SECTION 31 23 16

SECTION 31 23 23

FILL

PART 1 - GENERAL

1.1 SUMMARY

A. Section Includes:

1. Backfilling fence footing.

B. Related Requirements:

1. Section 03 30 00 - Cast-in-Place Concrete
2. Section 31 05 13 - Soils for Earthwork
3. Section 31 05 16 - Aggregates for Earthwork
4. Section 31 23 16 - Excavation

1.2 REFERENCE STANDARDS

A. American Association of State Highway and Transportation Officials:

1. AASHTO T 180 - Standard Method of Test for Moisture-Density Relations of Soils Using a 4.54-kg (10-lb) Rammer and a 457-mm (18-in.) Drop.

B. ASTM International:

1. ASTM D698 - Standard Test Methods for Laboratory Compaction Characteristics of Soil Using Standard Effort (12,400 ft-lbf/ft3 (600 kN-m/m3)).
2. ASTM D1556/D1556M - Standard Test Method for Density and Unit Weight of Soil in Place by Sand-Cone Method.
3. ASTM D2167 - Standard Test Method for Density and Unit Weight of Soil in Place by the Rubber Balloon Method.
4. ASTM D6031/D6031M - Standard Test Method for Logging In Situ Moisture Content and Density of Soil and Rock by the Nuclear Method in Horizontal, Slanted, and Vertical Access Tubes.
5. ASTM D6938 - Standard Test Method for In-Place Density and Water Content of Soil and Soil-Aggregate by Nuclear Methods (Shallow Depth).

1.3 SUBMITTALS

A. Section 01 33 00 - Submittal Procedures: Requirements for submittals.

B. Materials Source: Submit name of imported materials suppliers.

C. Manufacturer's Certificate: Certify that products meet or exceed specified requirements.

D. Field Quality-Control Submittals: Indicate results of Contractor-furnished tests and inspections.

1.4 QUALITY ASSURANCE

A. Perform Work according to Michigan Department of Transportation standards.

B. Maintain one copy of each standard affecting Work of this Section on Site.

PART 2 - PRODUCTS

2.1 MATERIALS

A. MDOT 22A Crushed Limestone

B. Native material: As approved by Engineer

PART 3 - EXECUTION

3.1 EXAMINATION

A. Section 01 70 00 - Execution and Closeout Requirements: Requirements for installation examination.

3.2 PREPARATION

A. Section 01 70 00 - Execution and Closeout Requirements: Requirements for installation preparation.

B. Compact subgrade to specified density requirements for subsequent backfill materials.

3.3 BACKFILLING

A. Backfill areas to contours and elevations.

B. Systematically backfill to allow maximum time for natural settlement.

C. Do not backfill over porous, wet, frozen, or spongy subgrade surfaces, and do not backfill with frozen materials.

D. Maintain optimum moisture content of fill materials to attain required compaction density.

E. Make gradual grade changes and blend slope into level areas.

F. Remove surplus backfill materials from Site.

G. Leave fill material stockpile areas free of excess fill materials.

3.4 TOLERANCES

A. Section 01 40 00 - Quality Requirements: Requirements for tolerances.

B. Top Surface of Backfilling under HMA playing surface: Plus or minus 1/2 inch from required elevations.

C. Top Surface of Backfilling outside tennis court Plus or minus 1 inch from required elevations.

3.5 FIELD QUALITY CONTROL

A. Section 01 70 00 - Execution and Closeout Requirements: Requirements for testing, adjusting, and balancing.

B. Testing:

1. Laboratory Material Testing: Comply with AASHTO T 180.
2. In-Place Compaction Testing:

    a. Density Tests: Comply with ASTM D1556/D1556M, D2167, or D6938.
    b. Moisture Tests: Comply with ASTM D6031/D6031M.

3. If tests indicate that Work does not meet specified requirements, remove Work, replace, compact, and retest.
4. Proof-roll compacted fill surfaces under HMA playing surface.

3.6 PROTECTION

A. Section 01 70 00 - Execution and Closeout Requirements: Requirements for protecting finished Work.

B. Reshape and recompact fills subjected to vehicular traffic during construction.

3.7 ATTACHMENTS

A. Fill Under Grass Areas: Native material to 3 inches below finish grade; compacted uniformly to 95 percent of maximum density.

B. Fill under Asphalt Paving:

1. Compact existing base to 95 percent of maximum density.
2. 22A Crushed Limestone to 3 inches below finish paving elevation; compacted uniformly to 95 percent of maximum density.

END OF SECTION 31 23 23

SECTION 32 12 16

ASPHALT PAVING

PART 1 - GENERAL

1.1 SUMMARY

A. Section Includes:

1. Asphalt materials.
2. Aggregate materials.
3. Aggregate subbase.
4. Asphalt paving base course, binder course, and wearing course.

1.2 PRICE AND PAYMENT PROCEDURES

A. Section 01 20 00 - Price and Payment Procedures Contract Sum/Price

B. HMA 13A Base Course:

1. Basis of Measurement: By Ton.
2. Basis of Payment: Includes furnishing, placing, compacting, and testing base course.

C. HMA 36A Wearing Course:

1. Basis of Measurement: By Ton.
2. Basis of Payment: Includes tack coating surfaces, furnishing, placing, compacting, and testing wearing course.

1.3 REFERENCE STANDARDS

A. American Association of State Highway and Transportation Officials:
1. AASHTO M29 - Standard Specification for Fine Aggregate for Bituminous Paving Mixtures.
2. AASHTO M140 - Standard Specification for Emulsified Asphalt.
3. AASHTO M208 - Standard Specification for Cationic Emulsified Asphalt.
4. AASHTO M288 - Standard Specification for Geotextile Specification for Highway Applications.
5. AASHTO M320 - Standard Specification for Performance-Graded Asphalt Binder.
6. AASHTO M324 - Standard Specification for Joint and Crack Sealants, Hot Applied, for Concrete and Asphalt Pavements.
7. AASHTO MP1a - Standard Specification for Performance-Graded Asphalt Binder.

B. Asphalt Institute:

1. AI MS-2 - Mix Design Methods for Asphalt Concrete and Other Hot- Mix Types.

2. AI MS-19 - Basic Asphalt Emulsion Manual.
3. AI SP-2 - Superpave Mix Design.

C. ASTM International:

1. ASTM C1371 - Standard Test Method for Determination of Emittance of Materials Near Room Temperature Using Portable Emissometers.
2. ASTM C1549 - Standard Test Method for Determination of Solar Reflectance Near Ambient Temperature Using a Portable Solar Reflectometer.
3. ASTM D242 - Standard Specification for Mineral Filler For Bituminous Paving Mixtures.
4. ASTM D692 - Standard Specification for Coarse Aggregate for Bituminous Paving Mixtures.
5. ASTM D946 - Standard Specification for Penetration-Graded Asphalt Cement for Use in Pavement Construction.
6. ASTM D977 - Standard Specification for Emulsified Asphalt.
7. ASTM D1073 - Standard Specification for Fine Aggregate for Bituminous Paving Mixtures.
8. ASTM D1188 - Standard Test Method for Bulk Specific Gravity and Density of Compacted Bituminous Mixtures Using Coated Samples
9. ASTM D2027 - Standard Specification for Cutback Asphalt (Medium-Curing Type).
10. ASTM D2397 - Standard Specification for Cationic Emulsified Asphalt.
11. ASTM D2726 - Standard Test Method for Bulk Specific Gravity and Density of Non-Absorptive Compacted Bituminous Mixtures.
12. ASTM D2950 - Standard Test Method for Density of Bituminous Concrete in Place by Nuclear Methods.
13. ASTM D3381 - Standard Specification for Viscosity-Graded Asphalt Cement for Use in Pavement Construction.
14. ASTM D3515 - Standard Specification for Hot-Mixed, Hot-Laid Bituminous Paving Mixtures.
15. ASTM D3549 - Standard Test Method for Thickness or Height of Compacted Bituminous Paving Mixture Specimens.
16. ASTM D3910 - Standard Practices for Design, Testing, and Construction of Slurry Seal.
17. ASTM D6690 - Standard Specification for Joint and Crack Sealants, Hot Applied, for Concrete and Asphalt Pavements.
18. ASTM E408 - Standard Test Methods for Total Normal Emittance of Surfaces Using Inspection-Meter Techniques.
19. ASTM E903 - Standard Test Method for Solar Absorptance, Reflectance, and Transmittance of Materials Using Integrating Spheres.
20. ASTM E1918 - Standard Test Method for Measuring Solar Reflectance of Horizontal and Low-Sloped Surfaces in the Field.
21. ASTM E1980 - Standard Practice for Calculating Solar Reflectance Index of Horizontal and Low-Sloped Opaque Surfaces.

1.4 SUBMITTALS

A. Section 01 33 00 - Submittal Procedures: Requirements for submittals.

B. Product Data:

1. Submit product information for asphalt and aggregate materials.
2. Submit mix design with laboratory test results supporting design.

C. Manufacturer's Certificate: Certify Products meet or exceed specified requirements.

1.5 QUALITY ASSURANCE

A. Mixing Plant: Certified by Michigan Department of Transportation.

B. Obtain materials from same source throughout.

C. Perform Work in accordance with Michigan Department of Transportation standard.

D. Maintain one copy of document on site.

1.6 QUALIFICATIONS

A. Installer: Company specializing in performing work of this section with minimum 2 years' experience.

1.7 AMBIENT CONDITIONS

A. Section 01 50 00 - Temporary Facilities and Controls: Ambient conditions control facilities for product storage and installation.

B. Do not place asphalt mixture between November 1 and March 1.

C. Do not place asphalt mixture when ambient air or base surface temperature is less than 40 degrees F, or surface is wet or frozen.

PART 2 - PRODUCTS

2.1 ASPHALT PAVING

A. Performance / Design Criteria:

B. Asphalt Materials:

1. Asphalt Binder: AASHTO M320; performance grade PG 58-28.
2. Tack Coat: In accordance with Michigan Department of Transportation standards.
3. Reclaimed Asphalt Pavement (RAP): Processed material obtained by milling or full depth removal of existing asphalt paving.

C. Aggregate Materials:

1. Coarse Aggregate: ASTM D692; crushed stone, gravel, or blast furnace slag.

2. Fine Aggregate: AASHTO M29; natural sand or sand manufactured from stone, gravel, or blast furnace slag.

2.2 MIXES

A. Use dry material to avoid foaming. Mix uniformly.

B. Asphalt Paving Mixtures: Designed in accordance with Michigan Department of Transportation standards.

1. Base Course: 13A.
2. Wearing Course: 36A.

2.3 SOURCE QUALITY CONTROL

A. Section 01 40 00 - Quality Requirements: Testing, inspection and analysis requirements.

B. Submit proposed mix design for review prior to beginning of Work.

C. Test samples in accordance with AI MS-2.

PART 3 - EXECUTION

3.1 EXAMINATION

A. Section 01 70 00 - Execution and Closeout Requirements: Requirements for installation examination.

B. Verify compacted subbase is dry and ready to support paving and imposed loads.

1. Proof roll subbase with fully loaded tandem-axle dump truck in minimum two perpendicular passes to identify soft spots.
2. Remove soft subbase and replace with compacted fill as specified in Section 31 23 23.

C. Verify gradients and elevations of base are correct.

3.2 INSTALLATION

A. Subbase:
1. Prepare existing aggregate base for paving by ensuring the base is graded smooth and compacted to 95% of maximum density.

B. Tack Coat:

1. Apply tack coat in accordance with Michigan Department of Transportation standards.

C. Double Course Asphalt Paving:

1. Install Work in accordance with Michigan Department of Transportation standards.
2. Place asphalt wearing course after tack coat has “broke” but before it loses tackiness.
3. Place each course of asphalt to thickness indicated on Drawings.
4. Compact each course by rolling to specified density. Do not displace or extrude paving from position. Hand compact in areas inaccessible to rolling equipment.
5. Perform rolling with consecutive passes to achieve even and smooth finish, without roller marks.

3.3 TOLERANCES

A. Section 01 40 00 - Quality Requirements: Tolerances.

B. Flatness: Maximum variation of 1/4 inch measured with 10 foot straight edge.

C. Scheduled Compacted Thickness: Within 1/4 inch.

D. Variation from Indicated Elevation: Within 1/2 inch.

3.4 FIELD QUALITY CONTROL

A. Section 01 70 00 - Execution and Closeout Requirements: Requirements for testing, adjusting, and balancing.

B. Take samples and perform tests including mat density tests in accordance with Michigan Department of Transportation standards.

C. Asphalt Paving Mix Temperature: Measure temperature at time of placement.

D. Asphalt Paving Density: ASTM D2950 nuclear method; test one location for every 500 square yards compacted paving.

3.5 PROTECTION

A. Section 01 70 00 - Execution and Closeout Requirements: Requirements for protecting finished Work.

B. Immediately after placement, protect paving from mechanical injury until surface temperature is less than 140 degrees F (60 degrees C).

END OF SECTION 32 12 16

SECTION 32 18 23.53

TENNIS AND PICKLEBALL SURFACE

PART 1 - GENERAL

1.1 SUMMARY

A. Section Includes:
   1. Acrylic Sport Surface
   2. Tennis Court Striping
   3. Pickleball Court Striping

B. Related Requirements:

   1. Section 32 12 16 - Asphalt Paving

1.2 UNIT PRICE - MEASUREMENT AND PAYMENT

A. Section 01 20 00 - Price and Payment Procedures: Contract Sum/Price modification procedures.

B. Acrylic Sport Surface:

   1. Basis of Measurement: Lump Sum
   2. Basis of Payment: Includes all labor, materials, equipment, cleaning, application and curing of Acrylic Sport Surface.

C. Tennis Court Striping:

   1. Basis of Measurement: By Each
   2. Basis of Payment: Includes all labor, materials equipment, cleaning, application, and curing of Tennis Court Striping for one complete court.

D. Pickleball Court Striping:

   1. Basis of Measurement: By Lineal Foot
   2. Basis of Payment: Includes all labor, materials equipment, cleaning, application, and curing of Pickleball Court Striping for one complete court.

1.3 REFERENCE STANDARDS

A. American Sports Builders Association:

   1. A.S.B.A. Specifications

1.4 SUBMITTALS

A. Section 01 33 00 - Submittal Procedures: Requirements for submittals.

B. Product Data: Submit paint formulation for each type of paint.

C. Manufacturer's Certificate: Certify that products meet or exceed specified requirements.

D. Manufacturer Instructions:

1. Submit instructions for application temperatures, eradication requirements, application rate, line thickness, type of glass beads, and bead embedment and application rate.
2. Submit detailed instructions on installation requirements, including storage and handling procedures.

E. Qualifications Statements:

1. Submit qualifications for manufacturer and applicator.
2. Submit manufacturer's approval of applicator.

1.5 QUALIFICATIONS

A. Manufacturer: Company specializing in manufacturing products specified in this Section with minimum three years' experience.

B. Applicator: Company specializing in performing Work of this Section with minimum three years' experience.

1.6 WARRANTY

A. Section 01 70 00 - Execution and Closeout Requirements: Requirements for warranties.

B. Furnish three-year manufacturer's warranty for pavement markings.

PART 2 - PRODUCTS

2.1 Acrylic Patch Binder

A. Manufacturer:
1. ThorWorks Industris, Inc.
2. Substitutions: As specified in Section 01 60 00 – Product Requirements

2.2 Acrylic Resurfacer

A. Manufacturer:
1. ThorWorks Industries, Inc.
2. Substitutions: As specified in Section 01 60 00 – Product Requirements

2.3 Color Concentrate

A. Manufacturer:
   1. ThorWorks Industries, Inc.
   2. Substitutions: As specified in Section 01 60 00 – Product Requirements

B. Colors:
   1. Forest Green
   2. Red

2.4 Lines

A. Manufacturer:
   1. ThorWorks Industries, Inc.
   2. Substitutions: As specified in Section 01 60 00 – Product Requirements

B. Product:
   1. T/C White Line Paint

PART 3 - EXECUTION

3.1 PREPARATION

A. New asphalt pavement shall cure for 14 days prior to application of any surfacing materials.

B. Contractors must notify the Owner construction representative of all applications, 48 hours prior to installation.

C. The surface to be coated shall be inspected and made sure to be free of grease, oil, dust, dirt and other foreign matter before starting work.

D. The surface shall be flooded. Any ponding water remaining that is deep enough to cover the thickness of a five-cent piece shall be corrected using a patch mix per manufacturer's directions.

3.2 APPLICATION

A. Application shall proceed only if the surface is dry and clean and the temperature is at least fifty degrees (50°F) and rising, and the surface temperature is not in excess of one hundred forty degrees (140°F). Do not apply coatings when rain is imminent.

B. Each coat in this system must dry completely before next application. Between each coat, Engineer must inspect entire surface and approve before work may continue. Any defects should be repaired. Scrape surface to remove any lumps, and broom or blow off all loose matter.

C. Follow Manufacturer's recommendation for application of acrylic system.

3.3 LINE MARKINGS

A. Upon completion and acceptance of the court surface, this Contractor shall prepare and paint lines for typical tennis and pickleball courts as shown on the plans.

B. All lines are to be applied by painting between masking tape with a paintbrush or roller.

C. Remove masking tape immediately after lines are dry.

D. Protect adjacent areas and structures (fences, posts, sidewalks, buildings, etc.), which are not to be coated. In the event that coatings are applied to above, remove immediately before drying is complete.

3.4 LIMITATIONS

A. Apply coatings only when ambient temperature is 50 degrees F. and rising, and the surface temperature is not in excess of one hundred forty (140) degrees F.

B. Care should be taken not to apply coatings when rain is forecast or sudden drop of temperature is expected. Climatic conditions such as very cool evenings and high dew points dictate that work should be completed early in the day so the coatings can be exposed to enough warm sunlight to form a film before sunset. The opposite applies during times of high heat, low humidity and drying breezes: under these conditions, work very early in the morning or very late in the day. If the product seems to be drying too fast in hot weather, mist the pavement with water to make the application easier. Care must be taken to allow each application to dry thoroughly prior to recoating.

END OF SECTION 32 18 23.53

SECTION 32 31 13

CHAIN LINK FENCES AND GATES

PART 1 - GENERAL

1.1 SUMMARY

A. Section Includes:

1. Fence framework, fabric, and accessories.
2. Excavation for post bases.
3. Concrete foundation for posts.
4. Manual gates and related hardware.
5. Privacy slats.

1.2 UNIT PRICE - MEASUREMENT AND PAYMENT

A. Fencing, __ foot:

1. Basis of Measurement: By linear foot to fence height specified, based on specified post spacing.
2. Basis of Payment: Includes posts, rails, tension wire, fabric, windscreen, accessories, and attachments. Gates are included in the Fencing pay item. Engineer will measure Fencing horizontally along the path of the fence. The Fencing, 10 Foot pay item is to be used at the Engineer's discretion where the existing fence fabric is not re-useable.

B. Fencing, 10 Foot, Salvaged

1. Basis of Measurement: By lineal foot to fence height specified, based on specified post spacing.
2. Basis of Payment: Includes new posts, rails, tension wire, accessories, windscreen, and attachments. Fabric salvaged from the existing fence on site to be incorporated into this work. Gates are included in the Fencing, 10 Foot, Salvaged pay item if fabric can be re-used. Engineer will measure Fencing horizontally along the path of the fence.

C. Fence Strip Footing:

1. Basis of Measurement: By Lineal Foot
2. Basis of Payment: Includes excavation, forming, placement, reinforcing, stripping forms, backfill with specified material, backfill compaction, and finishing of a strip footing. Engineer will measure Fence Strip Footing horizontally along the path of the fence.

1.3 REFERENCES

A. ASTM International:

1. ASTM A121 - Standard Specification for Metallic-Coated Carbon Steel Barbed Wire.

2. ASTM A123/A123M - Standard Specification for Zinc (Hot-Dip Galvanized) Coatings on Iron and Steel Products.
3. ASTM A153/A153M - Standard Specification for Zinc Coating (Hot-Dip) on Iron and Steel Hardware.
4. ASTM A392 - Standard Specification for Zinc-Coated Steel Chain-Link Fence Fabric.
5. ASTM A491 - Standard Specification for Aluminum-Coated Steel Chain-Link Fence Fabric.
6. ASTM A817 - Standard Specification for Metallic-Coated Steel Wire for Chain-Link Fence Fabric and Marcelled Tension Wire.
7. A1011/A1011M-07 Standard Specification for Steel, Sheet and Strip, Hot-Rolled, Carbon, Structural, High-Strength Low-Alloy, High-Strength Low-Alloy with Improved Formability, and Ultra-High Strength
8. ASTM B429/B429M - Standard Specification for Aluminum-Alloy Extruded Structural Pipe and Tube.
9. ASTM C94/C94M - Standard Specification for Ready-Mixed Concrete.
10. ASTM F552 - Standard Terminology relating to Chain Link Fencing.
11. ASTM F567 - Standard Practice for Installation of Chain-Link Fence.
12. ASTM F626 - Standard Specification for Fence Fittings.
13. ASTM F668 - Standard Specification for Polyvinyl Chloride (PVC) and Other Organic Polymer-Coated Steel Chain-Link Fence Fabric.
14. ASTM F900 - Standard Specification for Industrial and Commercial Swing Gates.
15. ASTM F934 - Standard Specification for Standard Colors for Polymer-Coated Chain Link Fence Materials.
16. ASTM F1043 - Standard Specification for Strength and Protective Coatings on Metal Industrial Chain Link Fence Framework.
17. ASTM F1083 - Standard Specification for Pipe, Steel, Hot-Dipped Zinc-Coated (Galvanized) Welded, for Fence Structures.
18. ASTM F1183 - Standard Specification for Aluminum Alloy Chain Link Fence Fabric.
19. ASTM F1184 - Standard Specification for Industrial and Commercial Horizontal Slide Gates.
20. ASTM F1345 - Standard Specification for Zinc - 5% Aluminum -Mischmetal Alloy-Coated Steel Chain-Link Fence Fabric.

B. Chain Link Fence Manufacturers Institute:

1. CLFMI - Product Manual.

1.4 SYSTEM DESCRIPTION

A. Fence Height: as indicated on Drawings.

B. Line Post Spacing: At intervals not exceeding 10 feet.

C. Fence Post and Rail Strength: Conform to ASTM F1043 Light Industrial Fence quality.

1.5 SUBMITTALS

A. Section 01 33 00 - Submittal Procedures: Requirements for submittals.

B. Shop Drawings: Indicate plan layout, spacing of components, post foundation dimensions, hardware anchorage, gates, and schedule of components.

C. Product Data: Submit data on fabric, posts, accessories, fittings and hardware.

D. Manufacturer's Installation Instructions: Submit installation requirements.

1.6 CLOSEOUT SUBMITTALS

A. Section 01 70 00 - Execution and Closeout Requirements: Closeout procedures.

B. Operation and Maintenance Data: Procedures for submittals.

1.7 QUALITY ASSURANCE

A. Supply material according to CLFMI - Product Manual.

B. Perform installation according to ASTM F567.

C. Perform Work according to of Michigan Department of Transportation standards.

D. Maintain one copy of each document on site.

1.8 QUALIFICATIONS

A. Manufacturer: Company specializing in manufacturing Products specified in this section with minimum three years' experience.

B. Installer: Company specializing in performing work of this section with minimum three years' experience.

1.9 DELIVERY, STORAGE AND HANDLING

A. Section 01 60 00 - Product Requirements: Requirements for transporting, handling, storing, and protecting products.

B. Deliver fence fabric and accessories in packed cartons or firmly tied rolls.

C. Identify each package with manufacturer's name.

D. Store fence fabric and accessories in secure and dry place.

PART 2 - PRODUCTS

2.1 MANUFACTURERS

A. Manufacturers:

1. Allied Fence Mfg., Co
2. Anchor Fence Co.
3. Douglas Sports Equipment
4. Substitutions: Section 01 60 00 - Product Requirements.

2.2 MATERIALS AND COMPONENTS

A. Materials and Components: Conform to CLFMI Product Manual.

B. Fabric Size: CLFMI Tennis Court service.

C. Intermediate Posts: Group IA

D. Terminal, Corner, Rail, Brace, and Gate Posts: Group IA

2.3 ACCESSORIES

A. Caps: Cast steel galvanized; sized to post diameter, set screw retainer.

B. Fittings: Sleeves, bands, clips, rail ends, tension bars, fasteners and fittings; galvanized steel.

C. Windscreen: Douglas Sports Equipment VCP to be installed on 10’ perimeter fence.

D. Safety Cap: Douglas Sports Equipment Poly-Cap to be installed on 4’ fence.

2.4 GATES

A. General:

1. Gate Types, Opening Widths and Directions of Operation: As indicated on Drawings.
2. Factory assemble gates.
3. Design gates for operation by one person.

B. Swing Gates:

1. Fabricate gates to permit 180 degree swing.
2. Gates Construction: ASTM F900 with welded corners. Use of corner fittings is not

2.5 FINISHES

A. Components and Fabric: Galvanized to ASTM A123/A123M for components; ASTM A153/A153M for hardware; ASTM A392 for fabric; 1.8 oz/sq ft coating.

B. Hardware: Galvanized to ASTM A153/A153M, 1.8 oz/sq ft coating.

C. Accessories: Same finish as framing.

PART 3 - EXECUTION

3.1 INSTALLATION

A. Install framework, fabric, accessories and gates according to ASTM F567.

B. Set posts plumb, in concrete footings with top of footing at finish grade. Slope top of concrete for water runoff.

C. Post Footing Depth Below Finish Grade: as shown on the Drawings

D. Brace each gate and corner post to adjacent line post with horizontal center brace rail and diagonal truss rods. Install brace rail one bay from end and gate posts.

E. Install top rail through line post tops and splice with 6 inch long rail sleeves.

F. Install center and bottom brace rail on corner gate leaves.

G. Place fabric on inside of posts and rails.

H. Do not stretch fabric until concrete foundation has cured 28 days.

I. Stretch fabric between terminal posts or at intervals of 100 feet (30 m) maximum, whichever is less.

J. Position bottom of fabric 1 inch above finished grade.

K. Fasten fabric to top rail, line posts, braces, and bottom tension wire with tie wire at maximum 15 inches (380 mm) on centers.

L. Attach fabric to end, corner, and gate posts with tension bars and tension bar clips.

M. Install bottom tension wire stretched taut between terminal posts.

N. Support gates from gate posts. Do not attach hinged side of gate from building wall.

O. Install gate with fabric to match fence. Install three hinges on each gate leaf, latch, catches, drop bolt.

P. Excavate holes for posts to diameter and spacing indicated on Drawings without disturbing underlying materials.

Q. Center and align posts. Place concrete around posts and vibrate or tamp for consolidation. Verify vertical and top alignment of posts and make necessary corrections.

R. Pour concrete footings per plans.

S. Allow footings to cure minimum 7 days before installing fabric and other materials attached to posts.

3.2 ERECTION TOLERANCES

A. Section 01 40 00 - Quality Requirements: Tolerances.

B. Maximum Variation From Plumb: 1/4 inch.

C. Maximum Offset From Indicated Position: 1 inch.

3.3 SCHEDULES

A. Court Perimeter: 10 feet high with windscreen.

B. Pickleball Divider: 4 feet high with safety cap.

END OF SECTION 32 31 13

CLUBVIEW PARK
TENNIS & PICKLEBALL COURTS

CHARTER TOWNSHIP OF YPSILANTI

AREA MAP
NOT TO SCALE

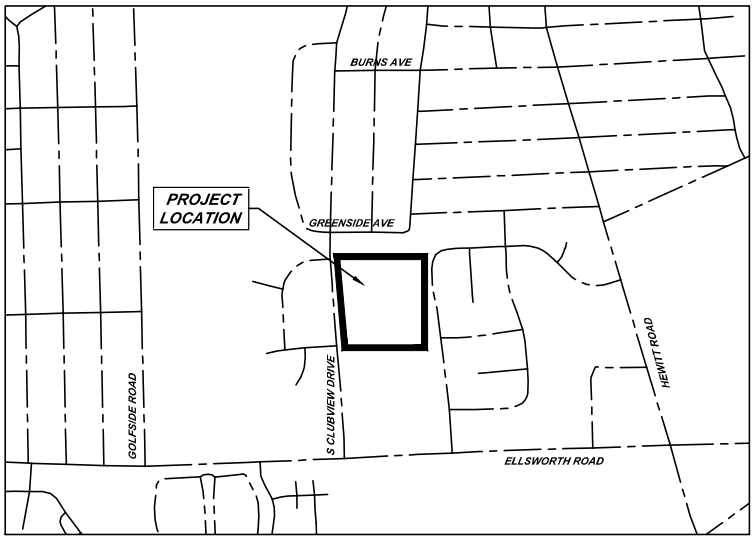

LOCATION MAP
SCALE: 1" = 500'

SECTION 7
T.03S-R.07E,
YPSILANTI TOWNSHIP,
WASHTENAW COUNTY, MICHIGAN

PLAN INDEX

DESCRIPTION	NO.
COVER SHEET	1
NOTE SHEET	2
EXISTING CONDITIONS	3
DEMOLITION PLAN	4
CONSTRUCTION PLAN	5
CONSTRUCTION PLAN	6
DETAILS	7

BY	MARK	REVISIONS	DATE

THE WORK REPRESENTED BY THIS DRAWING WAS DESIGNED BY THE ENGINEER FOR THIS SPECIFIC APPLICATION AND SPECIFIC LOCATION DESCRIBED HEREON IN ACCORDANCE WITH THE CONDITIONS PREVALENT AT THE TIME THE DESIGN WAS DONE. THE ENGINEER DOES NOT GUARANTEE AND WILL NOT BE LIABLE FOR ANY OTHER LOCATION, CONDITION, DESIGN OR PURPOSE.

CLUBVIEW PARK TENNIS & PICKLEBALL COURTS
CHARTER TOWNSHIP OF YPSILANTI

COVER SHEET

STATE OF MICHIGAN
JENNIFER L. CHEHAB
ENGINEER
No. 43220

SAGINAW OFFICE
230 S. Washington Ave.
Saginaw, MI 48607
Tel. 989-754-4717
Fax. 989-754-4440
www.SpicerGroup.com

DE. BY: ###	CH. BY: ###		PROJECT NO.
DR. BY: ###	APP. BY: ###		133251SG2022
STDS.		SHEET 1 OF 7	
DATE: JULY, 2023		FILE NO.	
SCALE			

GENERAL NOTES

NO WORK SHALL BE PERFORMED BEFORE 7:00 AM OR AFTER 7:00 PM MONDAY THROUGH SATURDAY. NO WORK SHALL HAPPEN ON SUNDAYS OR HOLIDAYS. UNLESS AUTHORIZED BY THE OWNER.

CONTRACTOR SHALL NOTIFY ENGINEER 48 HOURS PRIOR TO START OF CONSTRUCTION, CONSTRUCTION STAKING AND INSPECTION.

CONTRACTOR SHALL MAINTAIN ACCESS FOR MAIL DELIVERY AND GARBAGE PICKUP AT ALL PARCELS. IF THESE SERVICES CANNOT BE PERFORMED CONTRACTOR IS RESPONSIBLE FOR TAKING THE NECESSARY MEASURES TO CARRY THEM OUT.

COORDINATE DRIVE CLOSURES AND MAIL BOX RELOCATION WITH LANDOWNERS A MINIMUM OF ONE DAY IN ADVANCE.

CONTRACTOR TO PROVIDE DUST CONTROL AND SWEEP ROADS DAILY.

ALL EXCAVATED MATERIAL NOT TO BE REUSED OR DISPOSED OF ON SITE SHALL BE REMOVED FROM SITE. THE CONTRACTOR IS RESPONSIBLE FOR DISPOSING MATERIALS ACCORDING TO LOCAL AND STATE REQUIREMENTS.

UNDERGROUND UTILITIES/MISS DIG
FOR PROTECTION OF UNDERGROUND UTILITIES AND IN CONFORMANCE WITH PUBLIC ACT 174, 2013, THE CONTRACTOR SHALL DIAL 1-800-482-7171 OR 811 A MINIMUM OF THREE FULL WORKING DAYS, EXCLUDING SATURDAYS, SUNDAYS, AND HOLIDAYS PRIOR TO BEGINNING EACH EXCAVATION IN AREAS WHERE PUBLIC UTILITIES HAVE NOT BEEN PREVIOUSLY LOCATED. MEMBERS WILL THUS BE ROUTINELY NOTIFIED. THIS DOES NOT RELIEVE THE CONTRACTOR OF THE RESPONSIBILITY OF NOTIFYING UTILITY OWNERS WHO MAY NOT BE A PART OF THE "MISS DIG" ALERT SYSTEM.

THE EXISTING UTILITIES ON THESE DRAWINGS HAVE BEEN SHOWN ACCORDING TO THE BEST AVAILABLE INFORMATION. CONTRACTOR SHALL FIELD LOCATE ALL UTILITIES PRIOR TO BEGINNING CONSTRUCTION AND SHALL NOTIFY THE ENGINEER AS TO WHERE POSSIBLE CONFLICT EXISTS.

ALL CONSTRUCTION UNDER EXISTING UTILITIES, INCLUDING HOUSE SERVICES, SHALL BE COMPLETELY BACKFILLED WITH SAND, IN 12" LAYERS, AND COMPACTED TO NOT LESS THAN 95% OF THE MAXIMUM UNIT WEIGHT.

ANY UTILITIES ENCOUNTERED DURING CONSTRUCTION SHALL BE SUPPORTED, PER THE SPECIFICATIONS OF THE INDIVIDUAL UTILITY COMPANY CLAIMING OWNERSHIP OF THE UTILITY.

SOIL EROSION AND SEDIMENTATION CONTROL MEASURES
APPROPRIATE SOIL EROSION AND SEDIMENTATION CONTROL MEASURES SHALL BE IN PLACE PRIOR TO EARTH-DISTURBING ACTIVITIES. PLACE TURF ESTABLISHMENT ITEMS AS SOON AS POSSIBLE ON POTENTIAL ERODABLE SLOPES AS DIRECTED BY OWNER. CRITICAL DITCH GRADES SHALL BE PROTECTED WITH EITHER SOD OR SEED/MULCH OR MULCH BLANKET AS DIRECTED BY OWNER.

IT IS THE RESPONSIBILITY OF THE CONTRACTOR TO ENSURE THAT SOIL EROSION AND SEDIMENTATION CONTROL MEASURES ARE IN PLACE AND MAINTAINED UNTIL THE CONTRACT HAS BEEN COMPLETED AND ACCEPTED. MEASURES SHALL ONLY BE PAID FOR ONCE.

ALL CATCHBASINS AND SEDIMENTATION TRAP/BASIN SHALL BE CLEANED OUT UPON COMPLETION OF THE PROJECT.

CONTRACTOR SHALL CONFORM TO SOIL EROSION AND SEDIMENTATION CONTROL ACT, PART 91 OF ACT 451 OF 1994.

PROPERTY OWNERS
PROPERTY OWNERS' NAMES, WHERE SHOWN, ARE FOR INFORMATION ONLY, AND THEIR ACCURACY IS NOT GUARANTEED.

ADJUSTING MONUMENT BOXES
ALL GOVERNMENT CORNERS ON THIS PROJECT SHALL BE PRESERVED, WHETHER SHOWN OR NOT. IT MAY BE NECESSARY TO PLACE OR ADJUST MONUMENT BOXES, AS REQUIRED.

TRAFFIC
THE CONTRACTOR SHALL MAINTAIN LOCAL TRAFFIC AT ALL TIMES. SIGNAGE MUST BE IN ACCORDANCE WITH THE MICHIGAN MANUAL ON UNIFORM TRAFFIC CONTROL DEVICES AND SHALL BE COORDINATED WITH THE ENGINEER AND GOVERNING ROAD AGENCY. PERMITS MAY BE REQUIRED.

PERMITS
PRIOR TO COMMENCING CONSTRUCTION, THE CONTRACTOR IS RESPONSIBLE FOR OBTAINING ALL PERMITS REQUIRED BY THE APPROPRIATE AGENCIES.

CONSTRUCTION PROCEDURES SHALL CONFORM TO THE REQUIREMENTS OF THE APPROPRIATE AGENCIES.

CONTACTS

TOWNSHIP SUPERVISOR ATT: BRENDA STUMBO 7200 S HURON RIVER DR YPSILANTI, MI 48197 PHONE: (734) 481-0617	SUPERVISOR
PARK COMMISSION ATT: EDWARD BURNETT 7200 S HURON RIVER DR YPSILANTI, MI 48197 PHONE: (734) 484-0073	COMMISSIONER
DTE ENERGY ATT: SARAH KIPP ONE ENERGY PLAZA DETROIT, MI 48226 PHONE: (313) 235-5111	ELECTRIC
DTE GAS ATT: MICHAEL HARRISON ONE ENERGY PLAZA DETROIT, MI 48226 PHONE: (313) 235-5632	GAS
PARK METRO FIBERNET ATT: ERIC ESSENBURG 7200 2732 E MICHIGAN AVE LANSING MI, 48912 PHONE: (616) 821-7705	PHONE
YPSILANTI COMMUNITY UTILITY AUTHORITY ATT: MICHAEL SHAFFER 2777 STATE RD YPSILANTI, MI 48198 PHONE: (734) 484-4600	UTILITIES
ATT ATT: SHANITA CRANKFIELD 64 N MILL ST., 4TH FLOOR PONTIAC, MI 48343 PHONE: (248) 454-4344	INTERNET
MISS DIG PHONE: (800) 482-7171 OR 811	MICHIGAN UTILITY NOTIFICATION CENTER

GENERAL NOTES CONT.

SITE WORK
ALL TRENCHED CONSTRUCTION UNDER GRAVEL, PAVED SURFACES OR UTILITIES SHALL BE BACKFILLED WITH CLASS II SAND OR OTHER APPROVED GRANULAR MATERIAL IN 12" LAYERS AND COMPACTED TO 95% OF ITS MAXIMUM UNIT WEIGHT.

UNPAVED AREAS SHALL BE SMOOTHLY GRADED AND THE SURFACE STABILIZED BY SEEDING OR OTHERWISE. THE MAXIMUM DESIRABLE SLOPE IS 3 HORIZONTAL TO 1 VERTICAL UNLESS NOTED OTHERWISE.

CONTRACTOR SHALL SAWCUT PAVEMENT AND CURB & GUTTER FOR A CLEAN EDGE TO INSTALL PROPOSED PAVEMENT AND CURB & GUTTER.

CONTRACTOR IS RESPONSIBLE TO MAINTAIN POSITIVE DRAINAGE PATTERN TO ENSURE NO PONDING OF WATER ON ADJACENT EXISTING AND PROPOSED PAVED SURFACES.

DIMENSIONS SHOWN ARE GIVEN TO THE BACK OF CURBS AND FACE OF BUILDINGS UNLESS NOTED OTHERWISE.

STORM SEWER
PIPE MATERIALS SHALL BE AS FOLLOWS:
- 12" DIAMETER AND ABOVE - CONCRETE PIPE, C-76, ASTM C-443 OR PVC PIPE SDR35.
- LESS THAN 12" DIAMETER - PVC PIPE SDR35, OR HIGH DENSITY POLYETHYLENE (HDPE), DUAL WALL, CORRUGATED.

SANITARY SEWER
ALL SANITARY SEWER SHALL BE PVC, SDR35, TYPE PSM PLASTIC, CONFORMING TO ANSI/ASTM D3034 WITH RUBBER GASKET JOINTS, UNLESS SPECIFIED OTHERWISE.

WATER MAIN
WATER MAIN PIPE SHALL CONFORM TO THE MUNICIPALITY'S STANDARDS AND SHALL BE PVC C-900 OR DUCTILE IRON, CLASS 52, CEMENT LINED.

WATER SERVICE PIPE FROM 3/4" TO 2-1/2" SHALL BE SEAMLESS, TYPE-K COPPER.

WATER MAIN SHALL HAVE A MINIMUM COVER OF 5'-6" UNLESS OTHERWISE SPECIFIED.

CONTRACTOR SHALL SECURE ALL VERTICAL BENDS WITH A MINIMUM OF TWO 3/4" ANCHOR RODS PER FITTING EITHER TO A CONCRETE BLOCK, WELDED STEEL PIPE SLEEVE, OR PIPE COLLAR. METHOD USED SHALL BE DETERMINED BY THE ENGINEER.

ALL FITTINGS SHALL BE MECHANICAL JOINT. ALL HYDRANTS AND VALVES SHALL CONFORM TO THE MUNICIPALITY'S STANDARDS.

ALL BURIED FERROUS PARTS SHALL RECEIVE A 10 MIL (DRY MILL THICKNESS) COATING OF COAL TAR EPOXY.

ABBREVIATIONS

BC = BACK OF CURB
BM = BENCH MARK
C/C = CENTER TO CENTER
CB = CATCH BASIN
CL = CENTERLINE
CJ = CONSTRUCTION JOINT
CMP = CORRUGATED METAL PIPE
CSP = CORRUGATED STEEL PIPE
CONC = CONCRETE
DI = DUCTILE IRON PIPE
EF = EACH FACE
ELEC = ELECTRIC
EL OR ELEV = ELEVATION
EOM = EDGE OF METAL
EOP = EDGE OF PAVEMENT
EQ/SP = EQUALLY SPACED
ESMT = EASEMENT
EW = EACH WAY
EX OR EXIST = EXISTING
FF = FINISH FLOOR
FL = FLOW LINE
FS = FINISH SURFACE
FG = FINISH GROUND
GALV = GALVANIZED
G = GUTTER
HDG = HOT DIP GALVANIZED
HDPE = HIGH DENSITY POLYETHYLENE
HP = HIGH POINT
HMA = HOT MIX ASPHALT
HYD = HYDRANT
INV = INVERT
LP = LOW POINT
OC = ON CENTER
OH = OVERHEAD
MH = MANHOLE
MIN = MINIMUM
MON = MONUMENT
NFL = NOT FIELD LOCATED
NTS = NOT TO SCALE
PROP = PROPOSED
PVC = POLYVINYL CHLORIDE
RCP = REINFORCED CONCRETE PIPE
ROW = RIGHT OF WAY
SAN = SANITARY
SB = SOIL BORING
SS = STAINLESS STEEL
STA = STATION
STM = STORM
SWR = SEWER
T/B = TOP AND BOTTOM
TC = TOP OF CURB
TOB = TOP OF BANK
TOS = TOE OF SLOPE
TELE = TELEPHONE
TRW = TOP OF RETAINING WALL
TW = TOP OF WALK
UNO = UNLESS NOTED OTHERWISE
WM = WATER MAIN
WS = WATER SURFACE ELEVATION

LINE TYPE LEGEND

- EXISTING ROAD CENTERLINE
- EXISTING WATER MAIN
- EXISTING SANITARY SEWER OR FORCEMAIN
- EXISTING STORM SEWER
- EXISTING TELEPHONE CABLE
- EXISTING GAS MAIN
- EXISTING ELECTRIC
- PROPOSED UTILITY
- EXISTING CURB & GUTTER
- PROPOSED CURB & GUTTER
- FENCE LINE
- OVERHEAD UTILITY
- RAILROAD TRACKS
- STATION LINE
- LIMITS OF RIGHT OF WAY
- EASEMENT
- SILT FENCE
- RETURSIC PAN CURB & GUTTER
- TREE LINE
- EXISTING CONTOURS
- PROPOSED CONTOURS

SYMBOL LEGEND
EXISTING SYMBOLS

- MANHOLE
- CATCH BASIN
- CURB CATCH BASIN
- FIRE HYDRANT
- GAS VALVE
- WATER VALVE
- TELEPHONE PEDESTAL
- POWER POLE
- TELEPHONE POLE
- POWER AND TELEPHONE POLE
- LIGHT POLE
- GUY ANCHOR AND POLE
- MAIL BOX
- WATER METER
- TELEPHONE MANHOLE
- ELECTRIC MANHOLE
- MW - MONITORING WELL
- HAND HOLE
- TRANSFORMER
- ELECTRICAL PEDESTAL
- BARRIER FREE PARKING
- SPRINKLER
- RAILROAD SIGNAL
- ANTENNA
- SATELLITE DISH
- AIR CONDITIONING UNIT
- SOIL BORING
- BENCH MARK
- FOUND SURVEY CORNER
- SET 1/2" IRON ROD
- 1/4 SECTION CORNER
- BREAK IN LINE
- EXISTING SIGN-1 POST
- EXISTING SIGN-2 POST
- STUMP
- WETLANDS
- PINE
- BUSH
- TREE

PROPOSED SYMBOLS

- MANHOLE
- CATCHBASIN
- FIRE HYDRANT
- WATER VALVE
- BARRIER FREE PARKING
- LIGHT POLES
- DRAINAGE FLOW
- SPOT ELEVATION LABELS
  - E = ELEVATION
  - TW = WALK
  - TC = TOP OF CURB
  - FG = FINISH GRADE

BY	MARK	REVISIONS	DATE

THE WORK REPRESENTED BY THIS DRAWING WAS DESIGNED BY THE ENGINEER OF THIS SPECIFIC APPLICATION AND SPECIFICATION DESCRIBED HEREIN IN ACCORDANCE WITH THE CONDITIONS PREVALENT AT THE TIME THE DESIGN WAS DONE. THE ENGINEER DOES NOT GUARANTEE AND WILL NOT BE LIABLE FOR ANY DEVIATION, CONDITION, DESIGN OR PURPOSE.

CLUBVIEW PARK TENNIS & PICKLEBALL COURTS
CHARTER TOWNSHIP OF YPSILANTI

NOTE SHEET

Spicer Group
DUNDEE OFFICE
125 Helm Blvd, Suite 2
Dundee, MI 48131
Tel. 734-529-3308
www.SpicerGroup.com

DE. BY: ### CH. BY: ###		PROJECT NO. 133251SG2022
DR. BY: ### APP. BY: ###		
STDS.	SHEET 2 OF 7	
DATE JULY, 2023	FILE NO.	
SCALE		

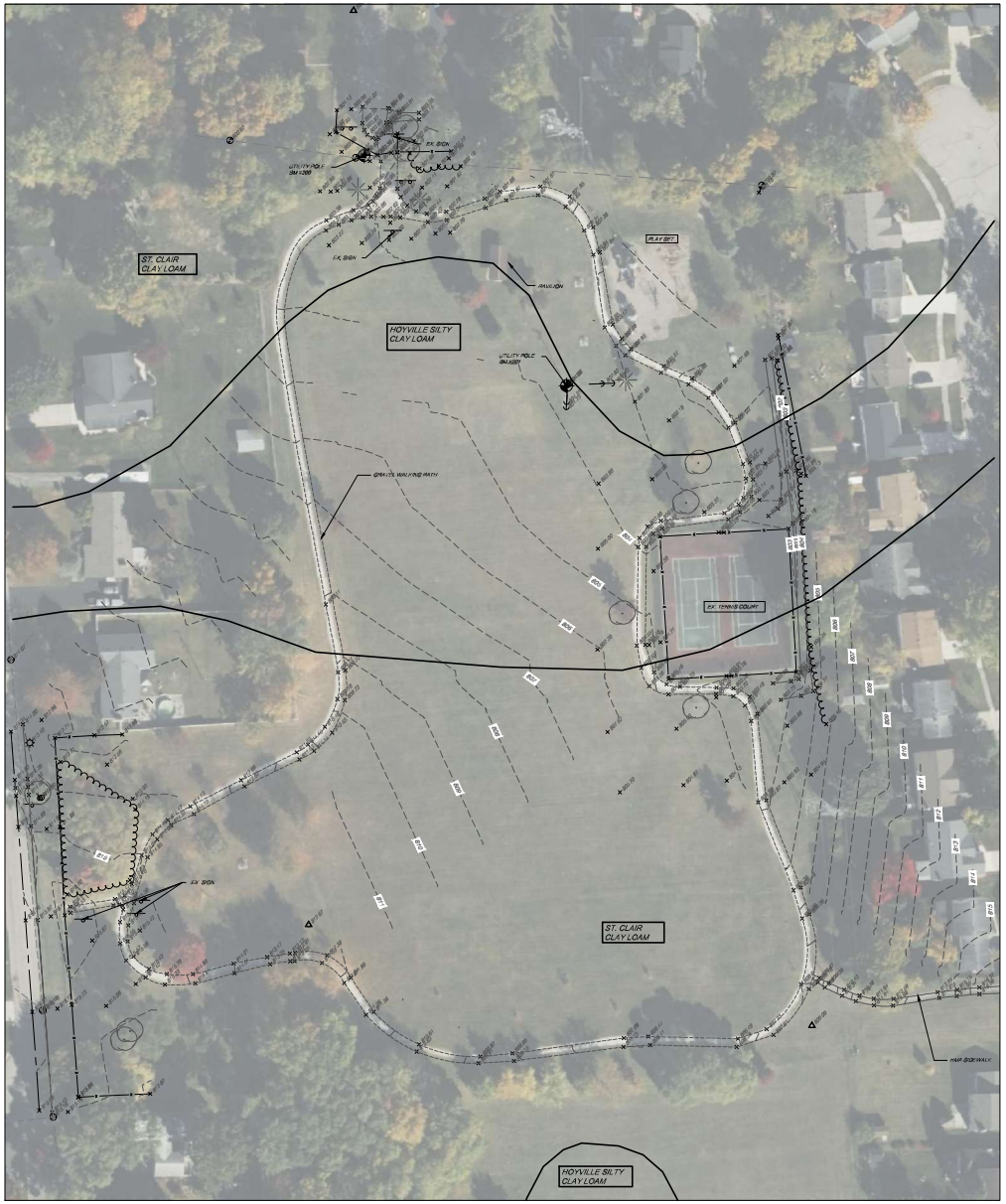

N

SECTION 7
T.03S-R.07E,
YPSILANTI TOWNSHIP,
WASHTENAW COUNTY, MICHIGAN

BY	MARK	REVISIONS	DATE

THE SIGNATURE REPRESENTED BY THIS DRAWING WAS DESIGNED BY THE ENGINEER FOR THIS SPECIFIC APPLICATION AND SPECIFIC LOCATION DESCRIBED HEREON IN ACCORDANCE WITH THE CONDITIONS PREVALENT AT THE TIME THE DESIGN WAS DONE. THE ENGINEER DOES NOT GUARANTEE AND WILL NOT BE LIABLE FOR ANY OTHER LOCATION, CONDITION, DESIGN OR PURPOSE.

CLUBVIEW PARK TENNIS & PICKLEBALL COURTS
CHARTER TOWNSHIP OF YPSILANTI

EXISTING CONDITIONS

SAGINAW OFFICE
230 S. Washington Ave.
Saginaw, MI 48607
Tel: 989-754-4717
Fax: 989-754-4448
www.SpicerGroup.com

DE. BY: ###	CH. BY: ###	PROJECT NO.	
DR. BY: ###	APP. BY: ###	133251SG2022	
STDS.		SHEET 3 OF 7	
DATE JULY, 2023		FILE NO.	
SCALE 1" = 50'			

N

SECTION 7
T.03S-R.07E,
YPSILANTI TOWNSHIP,
WASHTENAW COUNTY, MICHIGAN

HMA REMOVAL

BY	MARK	REVISIONS	DATE

THE WORK REPRESENTED BY THIS DRAWING WAS DESIGNED BY THE ENGINEER FOR THE SPECIFIED APPLICATION AND SPECIFIC LOCATION DESCRIBED HEREON, IN ACCORDANCE WITH THE CONDITIONS PREVALENT AT THE TIME THE DESIGN WAS DONE. THE ENGINEER DOES NOT GUARANTEE AND WILL NOT BE LIABLE FOR ANY OTHER LOCATION, CONDITION, OR DESIGN OR PURPOSE.

CLUBVIEW PARK TENNIS & PICKLEBALL COURTS
CHARTER TOWNSHIP OF YPSILANTI

DEMOLITION PLAN

SAGINAW OFFICE
230 S. Washington Ave.
Saginaw, MI 48607
Tel: 989-754-4717
Fax: 989-754-4445
www.SpicerGroup.com

DE. BY: ###	CH. BY: ###	PROJECT NO.	
DR. BY: ###	APP. BY: ###	133251SG2022	
STDS.		SHEET 4 OF 7	
DATE JULY, 2023		FILE NO.	
SCALE 1"= 50'			

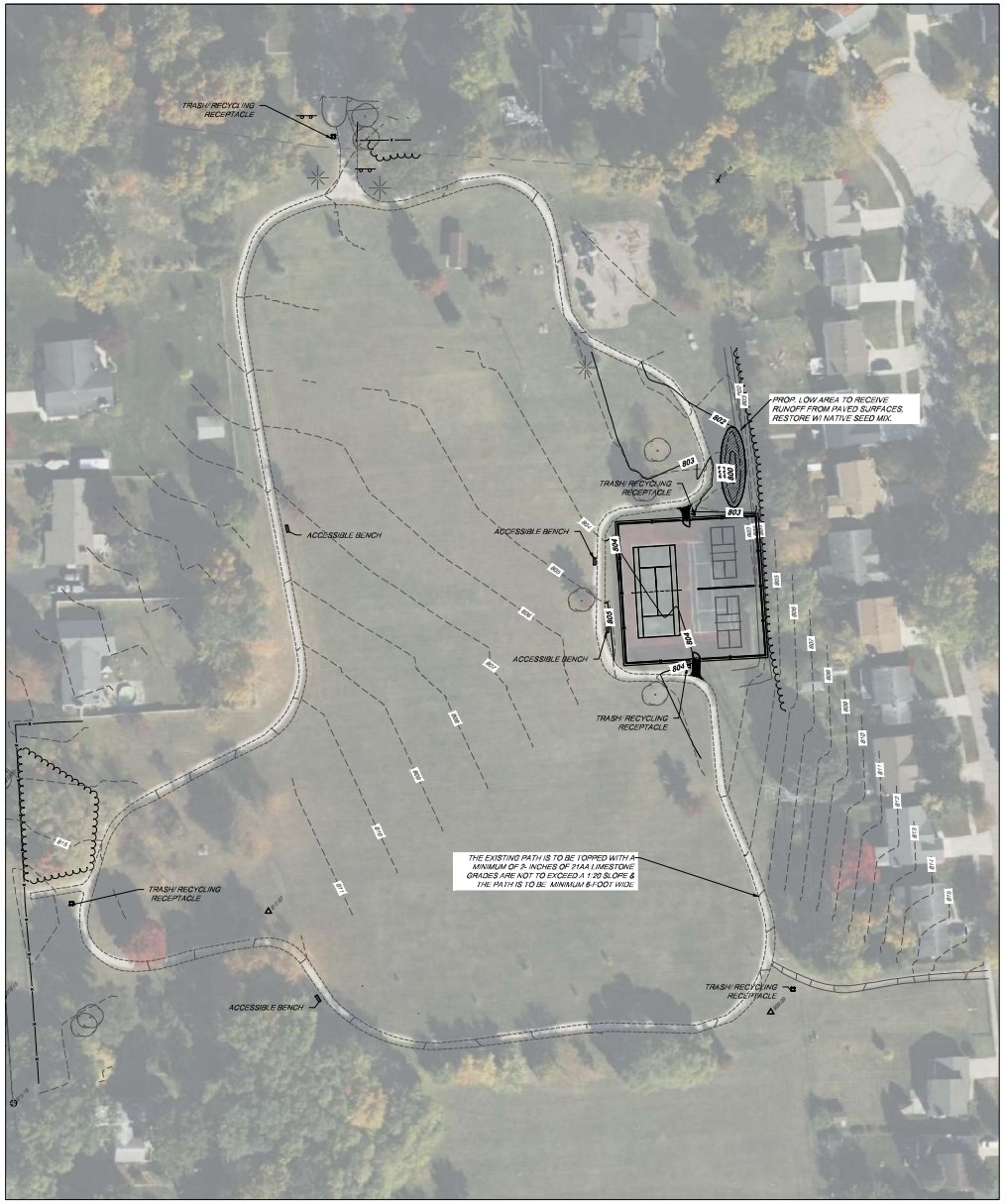

N

SECTION 7
T.03S-R.07E,
YPSILANTI TOWNSHIP,
WASHTENAW COUNTY, MICHIGAN

RAIN GARDEN

BY	MARK	REVISIONS	DATE

THE WORK REPRESENTED BY THIS DRAWING WAS DESIGNED BY THE ENGINEER FOR THE SPECIFIED APPLICATION AND SPECIFIC LOCATION DESCRIBED HEREON, IN ACCORDANCE WITH THE CONDITIONS PREVALENT AT THE TIME THE DESIGN WAS DONE. THE ENGINEER DOES NOT GUARANTEE AND WILL NOT BE LIABLE FOR ANY OTHER LOCATION, CONDITION, DESIGN OR PURPOSE.

CLUBVIEW PARK TENNIS & PICKLEBALL COURTS
CHARTER TOWNSHIP OF YPSILANTI

CONSTRUCTION PLAN

SAGINAW OFFICE
230 S. Washington Ave.
Saginaw, MI 48607
Tel: 989-754-4717
Fax: 989-754-4406
www.SpicerGroup.com

DE. BY: ###	CH. BY: ###	PROJECT NO.	
DR. BY: ###	APP. BY: ###	133251SG2022	
STDS.		SHEET 5 OF 7	
DATE JULY, 2023		FILE NO.	
SCALE 1" = 50'			

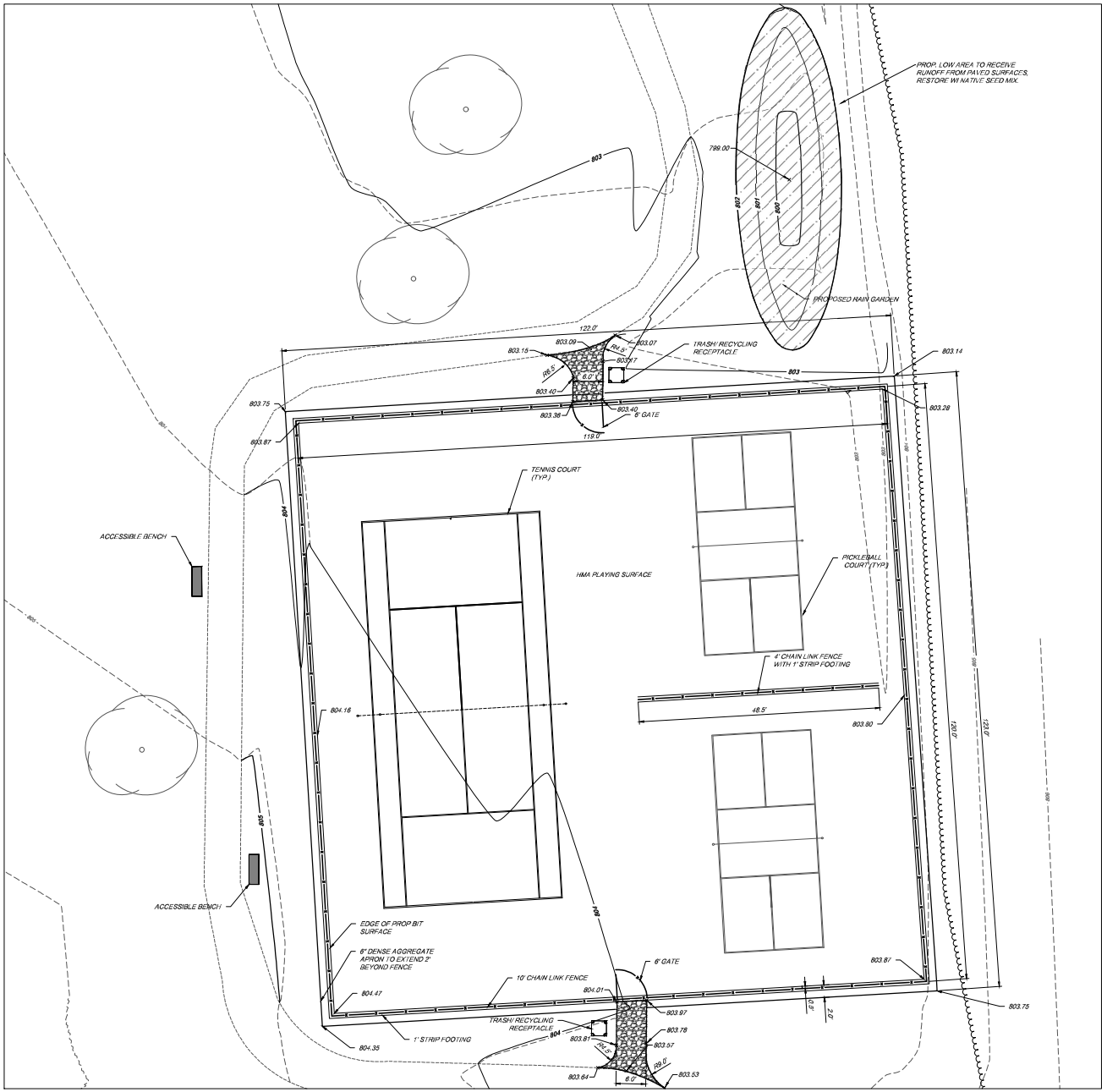

N

SECTION 7
T.03S-R.07E,
YPSILANTI TOWNSHIP,
WASHTENAW COUNTY, MICHIGAN

RAIN GARDEN

BY	MARK	REVISIONS	DATE

THE WORK REPRESENTED BY THIS DRAWING WAS DESIGNED BY THE ENGINEER FOR THE SPECIFIC APPLICATION AND SPECIFIC LOCATION DESCRIBED HEREON, IN ACCORDANCE WITH THE CONDITIONS PREVALENT AT THE TIME THE DESIGN WAS DONE. THE ENGINEER DOES NOT GUARANTEE AND WILL NOT BE LIABLE FOR ANY OTHER LOCATION, CONDITION, DESIGN OR PURPOSE.

CLUBVIEW PARK TENNIS & PICKLEBALL COURTS
CHARTER TOWNSHIP OF YPSILANTI

CONSTRUCTION PLAN

SAGINAW OFFICE
230 S. Washington Ave.
Saginaw, MI 48607
Tel: 989-754-4173
Fax: 989-754-4448
www.SpicerGroup.com

DE. BY: ###	CH. BY: ###	PROJECT NO.	
DR. BY: ###	APP. BY: ###	133251SG2022	
STDS.		SHEET 6 OF 7	
DATE JULY, 2023		FILE NO.	
SCALE 1" = 10'			

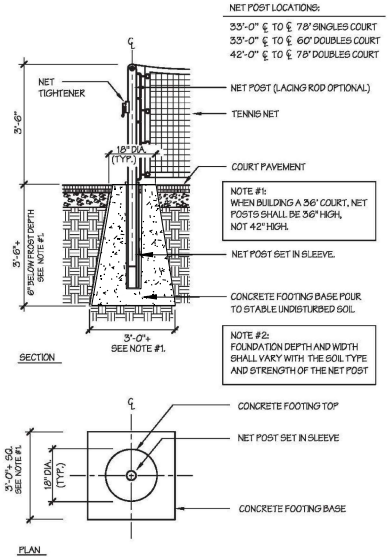

TENNIS NET POST FOOTING – PYRAMID SHAPE

NOT TO SCALE

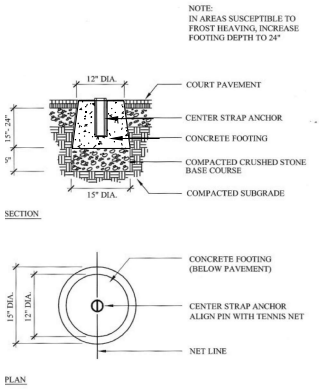

TENNIS NET CENTER STRAP ANCHOR

NOT TO SCALE

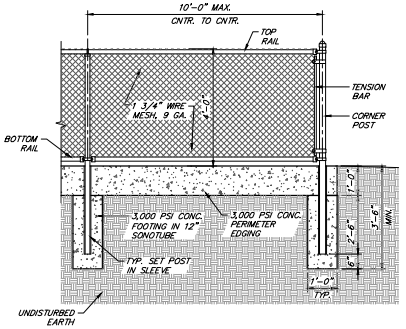

TYP. 4'-0" H. FENCE SECTION/ELEVATION

NOT TO SCALE

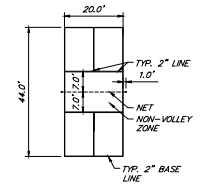

PICKLEBALL COURT STRIPING PLAN

SCALE: 1" = 20'

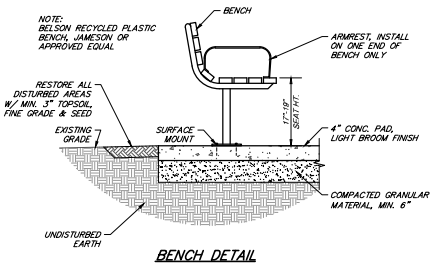

BENCH DETAIL

NOT TO SCALE

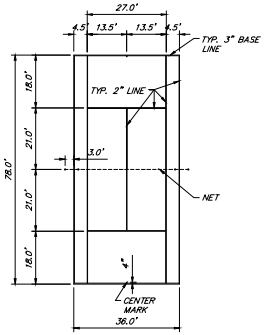

78' TENNIS COURT STRIPING PLAN

SCALE: 1" = 20'

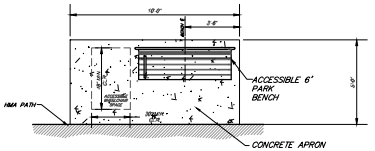

BENCH DETAIL

NOT TO SCALE

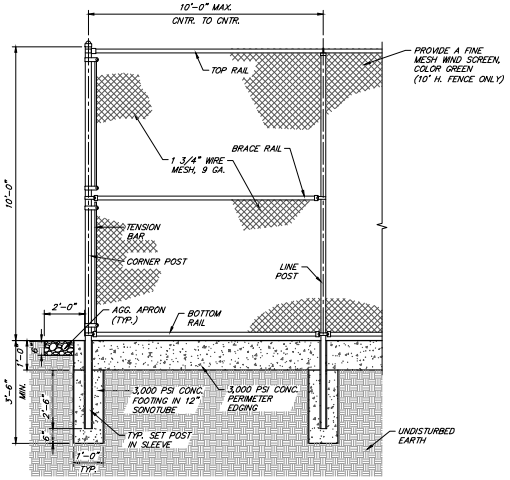

TYP. 10'-0" H. FENCE SECTION/ELEVATION

NOT TO SCALE

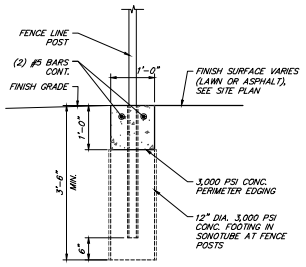

TYP. CONC. FENCE PERIMETER DETAIL

SCALE: 3/4" = 1'-0"

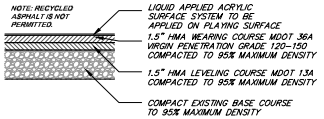

HMA SURFACE SECTION

NOT TO SCALE

BY	MARK	REVISIONS	DATE

THE WORK REPRESENTED BY THIS DRAWING WAS DESIGNED BY THE ENGINEER OF THIS SPECIFIC APPLICATION AND SPECIFICALLY FOR SUBSTRUCTURES IN ACCORDANCE WITH THE CONDITIONS PREVALENT AT THE TIME THE DESIGN WAS DONE. THE ENGINEER DOES NOT GUARANTEE AND WILL NOT BE LIABLE FOR ANY DETERIORATION, CONDITION, DESIGN OR FAILURE.

CLUBVIEW PARK TENNIS & PICKLEBALL COURTS
CHARTER TOWNSHIP OF YPSILANTI

DETAILS

SAGINAW OFFICE
330 S. Washington Ave.
Saginaw, MI 48607
Tel. 989-754-1777
Fax. 989-754-1418
www.SpicerGroup.com

DE. BY: ###	CH. BY: ###	PROJECT NO.	
DR. BY: ###	APP. BY: ###	133251SG2022	
STDS.		SHEET 7 OF 7	
DATE JULY, 2023		FILE NO.	
SCALE			

Township Supervisor
Brenda L. Stumbo
Township Clerk
Heather Jarrell Roe
Township Treasurer
Stan Eldridge

YPSILANTI TOWNSHIP
— RESIDENTIAL SERVICES DEPARTMENT —

Trustees
Ryan Hunter
John Newman II
Gloria Peterson
Debbie Swanson

MEMORANDUM

To: Charter Township of Ypsilanti Board of Trustees

From: John Hines, Interim Residential Services Director

CC: Javonna Neel, Accounting Director

Date: August 9, 2023

RE: Request Authorization to seek sealed bids for the renovation of Community Center Park Tennis Courts as part of the mDNR Land and Water Conservation Fund Development Project Agreement.

The Residential Services Department is requesting authorization to seek sealed bids for the renovation and construction of the Community Center Park Tennis Courts as part of the mDNR Land and Water Fund Development Project Agreement.

This grant is a 2020 mDNR LWCF grant which will be used to renovate the tennis courts at Community Center Park, create an accessible walkway and fencing and restore surrounding grounds area. The plan is to reduce the footprint of the tennis courts by 50% and include both tennis and pickleball courts.Specific bid dates are to be determined in Fall 2023 with Construction planned for early 2024.

Staff will return to the Board of Trustees to recommend and award the selection of a bidder.

Please find attached this memorandum the proposed construction documents and the bidding package as created by Spicer Group.

John Hines
Interim Residential Services Director
jhines@ypsitownship.org
734-544-3817

BIDDING DOCUMENTS
FOR

COMMUNITY CENTER PARK IMPROVEMENTS

YPSILANTI CHARTER TOWNSHIP
YPSILANTI, MICHIGAN

Prepared By:
SPICER GROUP, INC.

May 2023

Project I.D. Number: 129784SG2020

TABLE OF CONTENTS

Division	Section Title	Pages
BIDDING / CONTRACT DOCUMENTS (EJCDC)		
C-111	ADVERTISEMENT	1
C-200	INSTRUCTIONS TO BIDDERS	8
C-220	AFFIDAVIT OF COMPLIANCE IRAN LINKED BUSINESS	1
C-410	BID FORM	5
C-510	NOTICE OF AWARD	1
C-520	AGREEMENT	7
C-550	NOTICE TO PROCEED	1
C-610	PERFORMANCE BOND	3
C-615	PAYMENT BOND	4
C-620	CONTRACTORS APPLICATION FOR PAYMENT	2
C-625	CERTIFICATE OF SUBSTANTIAL COMPLETION	1
C-700	GENERAL CONDITIONS	65
C-800	SUPPLEMENTARY CONDITIONS	5
C-940	WORK CHANGE DIRECTIVE	1
C-941	CHANGE ORDER	1
C-942	FIELD ORDER	1
WAGE REQUIREMENTS		
	LIVING WAGE ORDINANCE	3
	PREVAILING WAGE ORDINANCE	2
	WAGE DECISION	11
DIVISION 01 - GENERAL REQUIREMENTS		
01 10 00	SUMMARY	2
01 20 00	PRICE AND PAYMENT PROCEDURES	4
01 25 00	SUBSTITUTION PROCEDURES	2
01 30 00	ADMINISTRATIVE REQUIREMENTS	3
01 32 16	CONSTRUCTION PROGRESS SCHEDULE	3
01 33 00	SUBMITTAL PROCEDURES	7
01 40 00	QUALITY REQUIREMENTS	4
01 50 00	TEMPORARY FACILITIES AND CONTROLS	4
01 60 00	PRODUCT REQUIREMENTS	2
01 70 00	EXECUTION AND CLOSEOUT REQUIREMENTS	6
DIVISION 11 -		
11 68 23.33	TENNIS AND PICKLEBALL EQUIPMENT	2
DIVISION 31 - EARTHWORK		
31 05 13	SOILS FOR EARTHWORK	2
31 05 16	AGGREGATES FOR EARTHWORK	3

31 10 00	SITE CLEARING	3
31 23 16	EXCAVATION	3
31 23 23	FILL	3
DIVISION 32 - EXTERIOR IMPROVEMENTS		
32 12 16	ASPHALT PAVING	5
32 18 23.53	TENNIS AND PICKLEBALL SURFACE	4
32 31 13	CHAIN LINK FENCES AND GATES	6
32 91 19	LANDSCAPE GRADING	3
32 92 19	SEEDING	4

END OF TABLE OF CONTENTS

CHARTER TOWNSHIP OF YPSILANTI

YPSILANTI, MICHIGAN
COMMUNITY CENTER PARK IMPROVEMENTS

ADVERTISEMENT FOR BIDS

Sealed Bids for the **Community Center Park Tennis and Pickleball Courts** will be received by CLERK'S OFFICE, Ypsilanti Township Civic Center, 7200 S. Huron River Dr., Ypsilanti MI., 48197, until **2:00 p.m.** local time on **XXXXXX**, at which time the Bids received will be publicly opened and read.

The Project consists of demolishing existing tennis courts and constructing new tennis and pickleball courts in their place.

This project is funded with a Michigan Department of Natural Resources (DNR) Land and Water Conservation Fund grant. All relevant State and/or Federal requirements will apply. This project does not require Davis-Bacon wage rates.

The Issuing Office for the Bidding Documents is: Spicer Group, Inc., 125 Helle Blvd., Suite 2, Dundee, MI 48131, Jennifer Chehab (248) 836-8436, jennifer.chehab@spicergroup.com. The contract documents for bidding purposes are available beginning XXXXXX on the Bidding section of the Spicer Group website at www.spicergroup.com, Bidding tab. You may view the digital project bidding documents by entering Quest project number **XXXXX** on the website's project search page. Please contact Quest CDN Customer Support at (952)233-1632 or info@questcdn.com for assistance in free membership registration, downloading and working with digital project information.

Use the Bid Form in the specifications for submittal of sealed bid. **You must download the Contract Documents from Quest CDN to bid on the project, to be included on the planholders list, and to receive Addenda**. The Contractor is responsible for ensuring all addendums have been received and acknowledged prior to submittal of the bid.

Bid security shall be furnished in accordance with the Instructions to Bidders.

Partial sets of Bidding Documents will not be available from the Issuing Office. Neither Owner nor Engineer will be responsible for full or partial sets of Bidding Documents, including Addenda if any, obtained from sources other than the Issuing Office.

Owner: **Ypsilanti Charter Township**

By:

Title: Clerk

Date:

+ + END OF ADVERTISEMENT FOR BIDS + +

INSTRUCTIONS TO BIDDERS

ARTICLE 1 – DEFINED TERMS

1.01 Terms used in these Instructions to Bidders have the meanings indicated in the General Conditions and Supplementary Conditions. Additional terms used in these Instructions to Bidders have the meanings indicated below:

A. *Issuing Office* – The office from which the Bidding Documents are to be issued.

ARTICLE 2 – COPIES OF BIDDING DOCUMENTS

2.01 Complete sets of the Bidding Documents may be obtained from the Issuing Office in the number and format stated in the advertisement or invitation to bid.

2.02 Complete sets of Bidding Documents shall be used in preparing Bids; neither Owner nor Engineer assumes any responsibility for errors or misinterpretations resulting from the use of incomplete sets of Bidding Documents.

2.03 Owner and Engineer, in making copies of Bidding Documents available on the above terms, do so only for the purpose of obtaining Bids for the Work and do not authorize or confer a license for any other use.

ARTICLE 3 – QUALIFICATIONS OF BIDDERS

3.01 To demonstrate Bidder's qualifications to perform the Work, after submitting its Bid and within 3 days of Owner's request, Bidder shall submit (a) written evidence establishing its qualifications such as financial data, previous experience, and present commitments, and (b) the following additional information:

3.02 A Bidder's failure to submit required qualification information within the times indicated may disqualify Bidder from receiving an award of the Contract.

3.03 No requirement in this Article 3 to submit information will prejudice the right of Owner to seek additional pertinent information regarding Bidder's qualifications.

3.04 Bidder is advised to carefully review those portions of the Bid Form requiring Bidder's representations and certifications.

ARTICLE 4 – SITE AND OTHER AREAS; EXISTING SITE CONDITIONS; EXAMINATION OF SITE; OWNER'S SAFETY PROGRAM; OTHER WORK AT THE SITE

4.01 *Site and Other Areas*

A. The Site is identified in the Bidding Documents. By definition, the Site includes rights-of-way, easements, and other lands furnished by Owner for the use of the Contractor. Any additional lands required for temporary construction facilities, construction equipment, or storage of materials and equipment, and any access needed for such additional lands, are to be obtained and paid for by Contractor.

4.02 *Existing Site Conditions*

A. Subsurface and Physical Conditions; Hazardous Environmental Conditions

1. The Supplementary Conditions identify:

a. those reports known to Owner of explorations and tests of subsurface conditions at or adjacent to the Site.

b. those drawings known to Owner of physical conditions relating to existing surface or subsurface structures at the Site (except Underground Facilities).

c. reports and drawings known to Owner relating to Hazardous Environmental Conditions that have been identified at or adjacent to the Site.

d. Technical Data contained in such reports and drawings.

2. Owner will make copies of reports and drawings referenced above available to any Bidder on request. These reports and drawings are not part of the Contract Documents, but the Technical Data contained therein upon whose accuracy Bidder is entitled to rely, as provided in the General Conditions, has been identified and established in the Supplementary Conditions. Bidder is responsible for any interpretation or conclusion Bidder draws from any Technical Data or any other data, interpretations, opinions, or information contained in such reports or shown or indicated in such drawings.

3. If the Supplementary Conditions do not identify Technical Data, the default definition of Technical Data set forth in Article 1 of the General Conditions will apply.

B. Underground Facilities: Information and data shown or indicated in the Bidding Documents with respect to existing Underground Facilities at or contiguous to the Site are set forth in the Contract Documents and are based upon information and data furnished to Owner and Engineer by owners of such Underground Facilities, including Owner, or others.

C. Adequacy of Data: Provisions concerning responsibilities for the adequacy of data furnished to prospective Bidders with respect to subsurface conditions, other physical conditions, and Underground Facilities, and possible changes in the Bidding Documents due to differing or unanticipated subsurface or physical conditions appear in Paragraphs 5.03, 5.04, and 5.05 of the General Conditions. Provisions concerning responsibilities for the adequacy of data furnished to prospective Bidders with respect to a Hazardous Environmental Condition at the Site, if any, and possible changes in the Contract Documents due to any Hazardous Environmental Condition uncovered or revealed at the Site which was not shown or indicated in the Drawings or Specifications or identified in the Contract Documents to be within the scope of the Work, appear in Paragraph 5.06 of the General Conditions.

4.03 *Site Visit and Testing by Bidders*

A. Bidder shall conduct the required Site visit during normal working hours, and shall not disturb any ongoing operations at the Site.

B. On request, and to the extent Owner has control over the Site, and schedule permitting, the Owner will provide Bidder access to the Site to conduct such additional examinations, investigations, explorations, tests, and studies as Bidder deems necessary for preparing and submitting a successful Bid. Owner will not have any obligation to grant such access if doing so is not practical because of existing operations, security or safety concerns, or restraints on Owner's authority regarding the Site.

C. Bidder shall comply with all applicable Laws and Regulations regarding excavation and location of utilities, obtain all permits, and comply with all terms and conditions established by Owner or by property owners or other entities controlling the Site with respect to schedule, access, existing operations, security, liability insurance, and applicable safety programs.

D. Bidder shall fill all holes and clean up and restore the Site to its former condition upon completion of such explorations, investigations, tests, and studies.

4.04 *Owner's Safety Program*

A. Site visits and work at the Site may be governed by an Owner safety program. As the General Conditions indicate, if an Owner safety program exists, it will be noted in the Supplementary Conditions.

4.05 *Other Work at the Site*

A. Reference is made to Article 8 of the Supplementary Conditions for the identification of the general nature of other work of which Owner is aware (if any) that is to be performed at the Site by Owner or others (such as utilities and other prime contractors) and relates to the Work contemplated by these Bidding Documents. If Owner is party to a written contract for such other work, then on request, Owner will provide to each Bidder access to examine such contracts (other than portions thereof related to price and other confidential matters), if any.

ARTICLE 5 – BIDDER'S REPRESENTATIONS

5.01 It is the responsibility of each Bidder before submitting a Bid to:

A. examine and carefully study the Bidding Documents, and any data and reference items identified in the Bidding Documents;

B. visit the Site, conduct a thorough, alert visual examination of the Site and adjacent areas, and become familiar with and satisfy itself as to the general, local, and Site conditions that may affect cost, progress, and performance of the Work;

C. become familiar with and satisfy itself as to all Laws and Regulations that may affect cost, progress, and performance of the Work;

D. carefully study all: (1) reports of explorations and tests of subsurface conditions at or adjacent to the Site and all drawings of physical conditions relating to existing surface or subsurface structures at the Site that have been identified in the Supplementary Conditions, especially with respect to Technical Data in such reports and drawings, and (2) reports and drawings relating to Hazardous Environmental Conditions, if any, at or adjacent to the Site that have been identified in the Supplementary Conditions, especially with respect to Technical Data in such reports and drawings;

E. consider the information known to Bidder itself; information commonly known to contractors doing business in the locality of the Site; information and observations obtained from visits to the Site; the Bidding Documents; and the Site-related reports and drawings identified in the Bidding Documents, with respect to the effect of such information, observations, and documents on (1) the cost, progress, and performance of the Work; (2) the means, methods, techniques, sequences, and procedures of construction to be employed by Bidder; and (3) Bidder's safety precautions and programs;

F. agree, based on the information and observations referred to in the preceding paragraph, that at the time of submitting its Bid no further examinations, investigations, explorations, tests, studies, or data are necessary for the determination of its Bid for performance of the Work at the price bid and within the times required, and in accordance with the other terms and conditions of the Bidding Documents;

G. become aware of the general nature of the work to be performed by Owner and others at the Site that relates to the Work as indicated in the Bidding Documents;

H. promptly give Engineer written notice of all conflicts, errors, ambiguities, or discrepancies that Bidder discovers in the Bidding Documents and confirm that the written resolution thereof by Engineer is acceptable to Bidder;

I. determine that the Bidding Documents are generally sufficient to indicate and convey understanding of all terms and conditions for the performance and furnishing of the Work; and

J. agree that the submission of a Bid will constitute an incontrovertible representation by Bidder that Bidder has complied with every requirement of this Article, that without exception the Bid and all prices in the Bid are premised upon performing and furnishing the Work required by the Bidding Documents.

ARTICLE 6 – PRE-BID CONFERENCE

6.01 No pre-bid conference will be held for this project. Bidders are encouraged to visit the site prior to bidding on this project.

ARTICLE 7 – INTERPRETATIONS AND ADDENDA

7.01 All questions about the meaning or intent of the Bidding Documents are to be submitted to Engineer in writing. Interpretations or clarifications considered necessary by Engineer in response to such questions will be issued by Addenda delivered to all parties recorded as having received the Bidding Documents. Questions received less than seven days prior to the date for opening of Bids may not be answered. Only questions answered by Addenda will be binding. Oral and other interpretations or clarifications will be without legal effect.

7.02 Addenda may be issued to clarify, correct, supplement, or change the Bidding Documents.

ARTICLE 8 – BID SECURITY

8.01 A Bid must be accompanied by Bid security made payable to Owner in an amount of 5 percent of Bidder's maximum Bid price (determined by adding the base bid and all alternates) and in the form of a certified check, bank money order, or a Bid bond issued by a surety meeting the requirements of Paragraphs 6.01 and 6.02 of the General Conditions.

8.02 The Bid security of the apparent Successful Bidder will be retained until Owner awards the contract to such Bidder, and such Bidder has executed the Contract Documents, furnished the required contract security, and met the other conditions of the Notice of Award, whereupon the Bid security will be released. If the Successful Bidder fails to execute and deliver the Contract Documents and furnish the required contract security within 15 days after the Notice of Award, Owner may consider Bidder to be in default, annul the Notice of Award, and the Bid security of that Bidder will be forfeited. Such forfeiture shall be Owner's exclusive remedy if Bidder defaults.

8.03 The Bid security of other Bidders that Owner believes to have a reasonable chance of receiving the award may be retained by Owner until the earlier of seven days after the Effective Date of the Contract or 61 days after the Bid opening, whereupon Bid security furnished by such Bidders will be released.

8.04 Bid security of other Bidders that Owner believes do not have a reasonable chance of receiving the award will be released within seven days after the Bid opening.

ARTICLE 9 – CONTRACT TIMES

9.01 The number of days within which, or the dates by which, the Work is to be substantially completed and ready for final payment are set forth in the Agreement.

ARTICLE 10 – LIQUIDATED DAMAGES

10.01 Provisions for liquidated damages, if any, for failure to timely attain a Milestone, Substantial Completion, or completion of the Work in readiness for final payment, are set forth in the Agreement.

ARTICLE 11 – SUBSTITUTE AND "OR-EQUAL" ITEMS

11.01 The Contract for the Work, as awarded, will be on the basis of materials and equipment specified or described in the Bidding Documents without consideration during the bidding and Contract award process of possible substitute or "or-equal" items. In cases in which the Contract allows the Contractor to request that Engineer authorize the use of a substitute or "or-equal" item of material or equipment, application for such acceptance may not be made to and will not be considered by Engineer until after the Effective Date of the Contract.

11.02 All prices that Bidder sets forth in its Bid shall be based on the presumption that the Contractor will furnish the materials and equipment specified or described in the Bidding Documents, as supplemented by Addenda. Any assumptions regarding the possibility of post-Bid approvals of "or-equal" or substitution requests are made at Bidder's sole risk.

ARTICLE 12 – SUBCONTRACTORS, SUPPLIERS, AND OTHERS

12.01 A Bidder shall be prepared to retain specific Subcontractors, Suppliers, or other individuals or entities for the performance of the Work if required by the Bidding Documents (most commonly in the Specifications) to do so. If a prospective Bidder objects to retaining any such Subcontractor, Supplier, or other individual or entity, and the concern is not relieved by an Addendum, then the prospective Bidder should refrain from submitting a Bid.

12.02 Subsequent to the submittal of the Bid, Owner may not require the Successful Bidder or Contractor to retain any Subcontractor, Supplier, or other individual or entity against which Contractor has reasonable objection.

12.03 The apparent Successful Bidder, and any other Bidder so requested, shall within five days after Bid opening, submit to Owner a list of the Subcontractors or Suppliers.

If requested by Owner, such list shall be accompanied by an experience statement with pertinent information regarding similar projects and other evidence of qualification for each such Subcontractor, Supplier, or other individual or entity. If Owner or Engineer, after due investigation, has reasonable objection to any proposed Subcontractor, Supplier, individual, or entity, Owner may, before the Notice of Award is given, request apparent Successful Bidder to submit an acceptable substitute, in which case apparent Successful Bidder shall submit a substitute, Bidder's Bid price will be increased (or decreased) by the difference in cost occasioned by such substitution, and Owner may consider such price adjustment in evaluating Bids and making the Contract award.

12.04 If apparent Successful Bidder declines to make any such substitution, Owner may award the Contract to the next lowest Bidder that proposes to use acceptable Subcontractors, Suppliers, or other individuals or entities. Declining to make requested substitutions will constitute grounds for forfeiture of the Bid security of any Bidder. Any Subcontractor, Supplier, individual, or entity so listed and against which Owner or Engineer makes no written objection prior to the giving of the Notice of Award will be deemed acceptable to Owner and Engineer subject to subsequent revocation of such acceptance as provided in Paragraph 7.06 of the General Conditions.

ARTICLE 13 – PREPARATION OF BID

13.01 The Bid Form is included with the Bidding Documents.

A. All blanks on the Bid Form shall be completed in ink and the Bid Form signed in ink. Erasures or alterations shall be initialed in ink by the person signing the Bid Form. A Bid price shall be indicated for each section, Bid item, alternate, adjustment unit price item, and unit price item listed therein.

B. If the Bid Form expressly indicates that submitting pricing on a specific alternate item is optional, and Bidder elects to not furnish pricing for such optional alternate item, then Bidder may enter the words "No Bid" or "Not Applicable."

13.02 A Bid by a corporation shall be executed in the corporate name by a corporate officer (whose title must appear under the signature), accompanied by evidence of authority to sign. The corporate address and state of incorporation shall be shown.

13.03 A Bid by a limited liability company shall be executed in the name of the firm by a member or other authorized person and accompanied by evidence of authority to sign. The state of formation of the firm and the official address of the firm shall be shown.

13.04 A Bid by an individual shall show the Bidder's name and official address.

13.05 A Bid by a joint venture shall be executed by an authorized representative of each joint venturer in the manner indicated on the Bid Form. The official address of the joint venture shall be shown.

13.06 All names shall be printed in ink below the signatures.

13.07 The Bid shall contain an acknowledgment of receipt of all Addenda, the numbers of which shall be filled in on the Bid Form.

13.08 Postal and e-mail addresses and telephone number for communications regarding the Bid shall be shown.

13.09 The Bid shall contain evidence of Bidder's authority and qualification to do business in the state where the Project is located, or Bidder shall covenant in writing to obtain such authority and qualification prior to award of the Contract and attach such covenant to the Bid. Bidder's state contractor license number, if any, shall also be shown on the Bid Form.

ARTICLE 14 – BASIS OF BID

14.01 *Unit Price*

A. Bidders shall submit a Bid on a unit price basis for each item of Work listed in the unit price section of the Bid Form.

B. The "Bid Price" (sometimes referred to as the extended price) for each unit price Bid item will be the product of the "Estimated Quantity" (which Owner or its representative has set forth in the Bid Form) for the item and the corresponding "Bid Unit Price" offered by the Bidder. The total of all unit price Bid items will be the sum of these "Bid Prices"; such total will be used by Owner for Bid comparison purposes. The final quantities and Contract Price will be determined in accordance with Paragraph 13.03 of the General Conditions.

C. Discrepancies between the multiplication of units of Work and unit prices will be resolved in favor of the unit prices. Discrepancies between the indicated sum of any column of figures and the correct sum thereof will be resolved in favor of the correct sum.

14.02 *Allowances*

A. For cash allowances the Bid price shall include such amounts as the Bidder deems proper for Contractor's overhead, costs, profit, and other expenses on account of cash allowances, if any, named in the Contract Documents, in accordance with Paragraph 13.02.B of the General Conditions.

ARTICLE 15 – SUBMITTAL OF BID

15.01 With each copy of the Bidding Documents, a Bidder is furnished one Affidavit of Compliance – Iran Economic Sanctions Act (C210) This form must be signed, notarized and included with the submitted bid package.

15.02 Deliver two paper copies of the bid in a sealed envelope by the date and time prescribed to CLERK'S OFFICE, Ypsilanti Township Civic Center, 7200 S. Huron River Dr., Ypsilanti MI 48197. Please write in LARGE PRINT ON THE OUTSIDE OF THE ENVELOPE: BID FOR Community Center Park Improvements

15.03 Bids received after the date and time prescribed for the opening of bids, or not submitted at the correct location or in the designated manner, will not be accepted and will be returned to the Bidder unopened.

ARTICLE 16 – MODIFICATION AND WITHDRAWAL OF BID

16.01 A Bid may be withdrawn by an appropriate document duly executed in the same manner that a Bid must be executed and delivered to the place where Bids are to be submitted prior to the date and time for the opening of Bids. Upon receipt of such notice, the unopened Bid will be returned to the Bidder.

16.02 If a Bidder wishes to modify its Bid prior to Bid opening, Bidder must withdraw its initial Bid in the manner specified in Paragraph 16.01 and submit a new Bid prior to the date and time for the opening of Bids.

16.03 If within 24 hours after Bids are opened any Bidder files a duly signed written notice with Owner and promptly thereafter demonstrates to the reasonable satisfaction of Owner that there was a material and substantial mistake in the preparation of its Bid, that Bidder may withdraw its Bid, and the Bid security will be returned. Thereafter, if the Work is rebid, that Bidder will be disqualified from further bidding on the Work.

ARTICLE 17 – OPENING OF BIDS

17.01 Bids will be opened at the time and place indicated in the advertisement or invitation to bid and, unless obviously non-responsive, read aloud publicly. An abstract of the amounts of the base Bids and major alternates, if any, will be made available to Bidders after the opening of Bids.

ARTICLE 18 – BIDS TO REMAIN SUBJECT TO ACCEPTANCE

18.01 All Bids will remain subject to acceptance for the period of time stated in the Bid Form, but Owner may, in its sole discretion, release any Bid and return the Bid security prior to the end of this period.

ARTICLE 19 – EVALUATION OF BIDS AND AWARD OF CONTRACT

19.01 Owner reserves the right to reject any or all Bids, including without limitation, nonconforming, nonresponsive, unbalanced, or conditional Bids. Owner will reject the Bid of any Bidder that Owner finds, after reasonable inquiry and evaluation, to not be responsible. If Bidder purports to add terms or conditions to its Bid, takes exception to any provision of the Bidding Documents, or attempts to alter the contents of the Contract Documents for purposes of the Bid, then the Owner will reject the Bid as nonresponsive; provided that Owner also reserves the right to waive all minor informalities not involving price, time, or changes in the Work.

19.02 If Owner awards the contract for the Work, such award shall be to the responsible Bidder submitting the lowest responsive Bid.

19.03 Evaluation of Bids

A. In evaluating Bids, Owner will consider whether or not the Bids comply with the prescribed requirements, and such alternates, unit prices, and other data, as may be requested in the Bid Form or prior to the Notice of Award.

B. For the determination of the apparent low Bidder when unit price bids are submitted, Bids will be compared on the basis of the total of the products of the estimated quantity of each item and unit price Bid for that item, together with any lump sum items.

19.04 In evaluating whether a Bidder is responsible, Owner will consider the qualifications of the Bidder and may consider the qualifications and experience of Subcontractors and Suppliers proposed for those portions of the Work for which the identity of Subcontractors and Suppliers must be submitted as provided in the Bidding Documents.

19.05 Owner may conduct such investigations as Owner deems necessary to establish the responsibility, qualifications, and financial ability of Bidders and any proposed Subcontractors or Suppliers.

ARTICLE 20 – BONDS AND INSURANCE

20.01 Article 6 of the General Conditions, as may be modified by the Supplementary Conditions, sets forth Owner's requirements as to performance and payment bonds and insurance. When the Successful Bidder delivers the Agreement (executed by Successful Bidder) to Owner, it shall be accompanied by required bonds and insurance documentation.

ARTICLE 21 – SIGNING OF AGREEMENT

21.01 When Owner issues a Notice of Award to the Successful Bidder, it shall be accompanied by the unexecuted counterparts of the Agreement along with the other Contract Documents as identified in the Agreement. Within 15 days thereafter, Successful Bidder shall execute and deliver the required number of counterparts of the Agreement (and any bonds and insurance documentation required to be delivered by the Contract Documents) to Owner. Within ten days thereafter, Owner shall deliver one fully executed counterpart of the Agreement to Successful Bidder, together with printed and electronic copies of the Contract Documents as stated in Paragraph 2.02 of the General Conditions.

ARTICLE 22 – EQUAL EMPLOYMENT

22.01 Attention of Bidders is particularly called to the requirement for ensuring that employees and applicants for employment are not discriminated against on any illegal basis with respect to hire, tenure, terms, conditions, or privileges of employment, or a matter directly or indirectly related to employment, because of race, color, religion, national origin, age, sex, height, weight, marital status, partisan considerations, genetic information, or a disability that is unrelated to the individual's ability to perform the duties of a particular job or position as required by Public Act 453 of 1976 (Elliot-Larsen Civil Rights Act), Public Act 220 of 1976 (Persons with Disabilities Act), as amended, and Executive Directive 2019-09.

ARTICLE 23 – BUILD AMERICA, BUY AMERICA (BABA)

23.01 Attention of Bidders is particularly called to the requirement for ensuring that all of the iron, steel, manufactured products, and construction materials used in the project are produced in the United States." (Build America, Buy America Act, P.L. 117-58, Secs 70911 - 70917.

AFFIDAVIT OF COMPLIANCE-IRAN ECONOMIC SANCTIONS ACT
MICHIGAN PUBLIC ACT 517 OF 2012

The undersigned, as owner or authorized officer of the below named CONTRACTOR, pursuant to the compliance certification requirement by the State of Michigan, and as referenced by OWNER in the BIDDING DOCUMENTS, hereby certifies, represents and warrants that the CONTRACTOR (including its Officers, Directors and Employees) is not an "Iran linked business" as defined by the Iran Economic Sanctions Act, Michigan Public Act 517 of 2012 (THE ACT). And, that in the event CONTRACTOR is awarded a contract as a result of the aforementioned BIDDING DOCUMENTS, the Contractor will not become an "Iran linked business" at any time during the course of preforming the work or any services under the contract.

The CONTACTOR further acknowledges that any person who is found to have submitted a false certification is responsible for a civil penalty of not more than $250,000.00 or 2 times the amount of the contract or proposed contract for which the false certification was made, whichever is greater. The cost of the OWNER'S investigation and reasonable attorney fees may also be added in addition to the fine. Moreover, any person who submitted a false certification shall be ineligible to bid on any other of the OWNER'S projects for three (3) years from the date that it is determined that the person has submitted the false certification.

CONTRACTOR:

_____
Name of Contractor
By: _____
Its: _____
Date: _____

STATE OF _____}
ss.
COUNTY OF _____}

This instrument was acknowledged before me on the _____day of _____, ____
by_____.

_____
, Notary Public
_____ County, State of _____
My Commission expires: _____
Acting in the County of: _____

BID FORM
FOR CONSTRUCTION CONTRACTS

ARTICLE 1 – BID RECIPIENT

1.01 This Bid is submitted to:

Clerk's Office
Ypsilanti Township Civic Center
7200 S Huron River Dr
Ypsilanti, MI 48197

1.02 The undersigned Bidder proposes and agrees, if this Bid is accepted, to enter into an Agreement with Owner in the form included in the Bidding Documents to perform all Work as specified or indicated in the Bidding Documents for the prices and within the times indicated in this Bid and in accordance with the other terms and conditions of the Bidding Documents.

ARTICLE 2 – BIDDER'S ACKNOWLEDGEMENTS

2.01 Bidder accepts all of the terms and conditions of the Instructions to Bidders, including without limitation those dealing with the disposition of Bid security. This Bid will remain subject to acceptance for 45days after the Bid opening, or for such longer period of time that Bidder may agree to in writing upon request of Owner.

ARTICLE 3 – BIDDER'S REPRESENTATIONS

3.01 In submitting this Bid, Bidder represents that:

A. Bidder has examined and carefully studied the Bidding Documents, and any data and reference items identified in the Bidding Documents, and hereby acknowledges receipt of the following Addenda:

Addendum No.	**Addendum, Date**
_____	_____
_____	_____
_____	_____
_____	_____

If no addenda have been issued, insert "N/A". Bidder shall submit signed copies of the Addendum Acknowledgment receipt form issued with each addendum with the complete bid form.

B. Bidder has visited the Site, conducted a thorough, alert visual examination of the Site and adjacent areas, and become familiar with and satisfied itself as to the general, local, and Site conditions that may affect cost, progress, and performance of the Work.

C. Bidder is familiar with and has satisfied itself as to all Laws and Regulations that may affect cost, progress, and performance of the Work.

D. Bidder has carefully studied all: (1) reports of explorations and tests of subsurface conditions at or adjacent to the Site and all drawings of physical conditions relating to existing surface or subsurface structures at the Site that have been identified in the Supplementary Conditions, especially with respect to Technical Data in such reports and drawings, and (2) reports and drawings relating to Hazardous Environmental Conditions, if any, at or adjacent to the Site that have been identified in the Supplementary Conditions, especially with respect to Technical Data in such reports and drawings.

E. Bidder has considered the information known to Bidder itself; information commonly known to contractors doing business in the locality of the Site; information and observations obtained from visits to the Site; the Bidding Documents; and any Site-related reports and drawings identified in the Bidding Documents, with respect to the effect of such information, observations, and documents on (1) the cost, progress, and performance of the Work; (2) the means, methods, techniques, sequences, and procedures of construction to be employed by Bidder; and (3) Bidder's safety precautions and programs.

F. Bidder agrees, based on the information and observations referred to in the preceding paragraph, that no further examinations, investigations, explorations, tests, studies, or data are necessary for the determination of this Bid for performance of the Work at the price bid and within the times required, and in accordance with the other terms and conditions of the Bidding Documents.

G. Bidder is aware of the general nature of work to be performed by Owner and others at the Site that relates to the Work as indicated in the Bidding Documents.

H. Bidder has given Engineer written notice of all conflicts, errors, ambiguities, or discrepancies that Bidder has discovered in the Bidding Documents, and confirms that the written resolution thereof by Engineer is acceptable to Bidder.

I. The Bidding Documents are generally sufficient to indicate and convey understanding of all terms and conditions for the performance and furnishing of the Work.

J. The submission of this Bid constitutes an incontrovertible representation by Bidder that Bidder has complied with every requirement of this Article, and that without exception the Bid and all prices in the Bid are premised upon performing and furnishing the Work required by the Bidding Documents.

ARTICLE 4 – BIDDER'S CERTIFICATION

4.01 Bidder certifies that:

A. This Bid is genuine and not made in the interest of or on behalf of any undisclosed individual or entity and is not submitted in conformity with any collusive agreement or rules of any group, association, organization, or corporation;

B. Bidder has not directly or indirectly induced or solicited any other Bidder to submit a false or sham Bid;

C. Bidder has not solicited or induced any individual or entity to refrain from bidding; and

D. Bidder has not engaged in corrupt, fraudulent, collusive, or coercive practices in competing for the Contract. For the purposes of this Paragraph 4.01.D:

1. "corrupt practice" means the offering, giving, receiving, or soliciting of any thing of value likely to influence the action of a public official in the bidding process;

2. "fraudulent practice" means an intentional misrepresentation of facts made (a) to influence the bidding process to the detriment of Owner, (b) to establish bid prices at artificial non-competitive levels, or (c) to deprive Owner of the benefits of free and open competition;

3. "collusive practice" means a scheme or arrangement between two or more Bidders, with or without the knowledge of Owner, a purpose of which is to establish bid prices at artificial, non-competitive levels; and

4. "coercive practice" means harming or threatening to harm, directly or indirectly, persons or their property to influence their participation in the bidding process or affect the e execution of the Contract.

ARTICLE 5 – BASIS OF BID

5.01 Bidder will complete the Work in accordance with the Contract Documents for the following price(s):

Item No.	Description	Unit	Estimated Quantity	Bid Unit Price	Bid Price
1.	Tennis Court Equipment	Each	1	$	$
2.	Pickleball Court Equipment	Each	4	$	$
3.	HMA Surface Removal	Sq Yd	4,800	$	$
4.	Tennis Equipment Removal	Lump Sum	1	$	$
5.	Fence Removal	Lin Ft	850	$	$
6.	HMA 13A Base Course	Ton	150	$	$
7.	HMA 36A Wearing Course	Ton	150	$	$
8.	Aggregate Surface Course, 6 inch	Sq Yd	330	$	$
9.	Acrylic Sport Surface	Lump Sum	1	$	$
10.	Tennis Court Striping	Each	1	$	$
11.	Pickleball Court Striping	Each	4	$	$
12.	Fencing, 4 Foot	Lin Ft	110	$	$
13.	Fencing, 10 Foot	Lin Ft	600	$	$
14.	Fence Strip Footing	Lin Ft	710	$	$
15.	Trash/ Recycling Receptacle	Each	2	$	$
16.	Accessible Bench	Each	1	$	$
17.	Pavt Mrkg, Waterborne, 4 inch, Blue	Lin Ft	360	$	$
18.	Pavt Mrkg, Preformed Thermal, Accessible Sym	Each	6	$	$
19.	Post, Steel, 3 lb	Ft	72	$	$
20.	Sign, Type IIIA	Sq Ft	12	$	$
21.	Landscaping/ Site Restoration	Lump Sum	1	$	$
Total of All Unit Price Bid Items					$

Bidder acknowledges that (1) each Bid Unit Price includes an amount considered by Bidder to be adequate to cover Contractor's overhead and profit for each separately identified item, and (2) estimated quantities are not guaranteed, and are solely for the purpose of comparison of Bids, and

final payment for all unit price Bid items will be based on actual quantities, determined as provided in the Contract Documents.

ARTICLE 6 – TIME OF COMPLETION

6.01 Bidder agrees that the Work will be substantially complete on or before XXXXX and will be completed and ready for final payment in accordance with Paragraph 15.06 of the General Conditions on or before XXXXXX

6.02 Bidder accepts the provisions of the Agreement as to liquidated damages.

ARTICLE 7 – ATTACHMENTS TO THIS BID

7.01 The following documents are submitted with and made a condition of this Bid:

A. Required Bid security;

B. Affidavit of Compliance – Iran Economic Sanctions Act;

ARTICLE 8 – DEFINED TERMS

8.01 The terms used in this Bid with initial capital letters have the meanings stated in the Instructions to Bidders, the General Conditions, and the Supplementary Conditions.

ARTICLE 9 – BID SUBMITTAL

BIDDER: *[Indicate correct name of bidding entity]*

_____

By:
[Signature] _____

[Printed name] _____
(If Bidder is a corporation, a limited liability company, a partnership, or a joint venture, attach evidence of authority to sign.)

Attest:
[Signature] _____

[Printed name] _____

Title: _____

Submittal Date: _____

Address for giving notices:

_____

_____

_____

Telephone Number: _____

Fax Number: _____

Contact Name and e-mail address: _____

_____

Bidder's License No.: _____
(where applicable)

NOTE TO USER: Use in those states or other jurisdictions where applicable or required.

NOTICE OF AWARD

Date of Issuance:

Owner:	Ypsilanti Charter Township	Owner's Contract No.:	
Engineer:	Spicer Group, Inc.	Engineer's Project No.:	129784SG2020
Project:	Community Center Park Improvements	Contract Name:	

Bidder:

Bidder's Address:

TO BIDDER:

You are notified that Owner has accepted your Bid dated [_____] for the above Contract, and that you are the Successful Bidder and are awarded a Contract for:

_____ .

[describe Work, alternates, or sections of Work awarded]

The Contract Price of the awarded Contract is: $_____ *[note if subject to unit prices, or cost-plus]*

[ ] unexecuted counterparts of the Agreement accompany this Notice of Award, and one copy of the Contract Documents accompanies this Notice of Award, or has been transmitted or made available to Bidder electronically. *[revise if multiple copies accompany the Notice of Award]*

☐ a set of the Drawings will be delivered separately from the other Contract Documents.

You must comply with the following conditions precedent within 15 days of the date of receipt of this Notice of Award:

1. Deliver to Owner [____]counterparts of the Agreement, fully executed by Bidder.
2. Deliver with the executed Agreement(s) the Contract security *[e.g., performance and payment bonds]* and insurance documentation as specified in the Instructions to Bidders and General Conditions, Articles 2 and 6.
3. Other conditions precedent (if any):

Failure to comply with these conditions within the time specified will entitle Owner to consider you in default, annul this Notice of Award, and declare your Bid security forfeited.

Within ten days after you comply with the above conditions, Owner will return to you one fully executed counterpart of the Agreement, together with any additional copies of the Contract Documents as indicated in Paragraph 2.02 of the General Conditions.

Owner**:**

_____	_____
Authorized Signature	Authorized Signature
By:	By:
Title:	Title:

Copy: Engineer

AGREEMENT

THIS AGREEMENT is by and between _____ ("Owner") and

_____ ("Contractor").

Owner and Contractor hereby agree as follows:

ARTICLE 1 – WORK

1.01 Contractor shall complete all Work as specified or indicated in the Contract Documents. The Work is generally described as follows:

ARTICLE 2 – THE PROJECT

2.01 The Project, of which the Work under the Contract Documents is a part, is generally described as follows: Burns Park Tennis and Pickleball Courts.

ARTICLE 3 – ENGINEER

3.01 The Project has been designed by Spicer Group, Inc.

3.02 The Owner has retained Spicer Group, Inc. ("Engineer") to act as Owner's representative, assume all duties and responsibilities, and have the rights and authority assigned to Engineer in the Contract Documents in connection with the completion of the Work in accordance with the Contract Documents.

ARTICLE 4 – CONTRACT TIMES

4.01 *Time of the Essence*

A. All time limits for Milestones, if any, Substantial Completion, and completion and readiness for final payment as stated in the Contract Documents are of the essence of the Contract.

4.02 *Contract Times: Dates*

A. The Work will be substantially completed on or before XXXXX and completed and ready for final payment in accordance with Paragraph 15.06 of the General Conditions on or before XXXXXXX

4.03 *Liquidated Damages*

A. Contractor and Owner recognize that time is of the essence as stated in Paragraph 4.01 above and that Owner will suffer financial and other losses if the Work is not completed and Milestones not achieved within the times specified in Paragraph 4.02 above, plus any extensions thereof allowed in accordance with the Contract. The parties also recognize the delays, expense, and difficulties involved in proving in a legal or arbitration proceeding the actual loss suffered by Owner if the Work is not completed on time. Accordingly, instead of requiring any such proof, Owner and Contractor agree that as liquidated damages for delay (but not as a penalty):

1. Substantial Completion: Contractor shall pay Owner $600 for each day that expires after the time (as duly adjusted pursuant to the Contract) specified in Paragraph 4.02.A above for Substantial Completion until the Work is substantially complete.

2. Completion of Remaining Work: After Substantial Completion, if Contractor shall neglect, refuse, or fail to complete the remaining Work within the Contract Time (as duly adjusted pursuant to the Contract) for completion and readiness for final payment, Contractor shall pay Owner $600 for each day that expires after such time until the Work is completed and ready for final payment.

3. Liquidated damages for failing to timely attain Substantial Completion and final completion are not additive and will not be imposed concurrently.

4.04 *Special Damages*

A. In addition to the amount provided for liquidated damages, Contractor shall reimburse Owner (1) for any fines or penalties imposed on Owner as a direct result of the Contractor's failure to attain Substantial Completion according to the Contract Times, and (2) for the actual costs reasonably incurred by Owner for engineering, construction observation, inspection, and administrative services needed after the time specified in Paragraph 4.02 for Substantial Completion (as duly adjusted pursuant to the Contract), until the Work is substantially complete.

B. After Contractor achieves Substantial Completion, if Contractor shall neglect, refuse, or fail to complete the remaining Work within the Contract Times, Contractor shall reimburse Owner for the actual costs reasonably incurred by Owner for engineering, construction observation, inspection, and administrative services needed after the time specified in Paragraph 4.02 for Work to be completed and ready for final payment (as duly adjusted pursuant to the Contract), until the Work is completed and ready for final payment.

ARTICLE 5 – CONTRACT PRICE

5.01 Owner shall pay Contractor for completion of the Work in accordance with the Contract Documents the amounts that follow, subject to adjustment under the Contract:

A. For all Unit Price Work, an amount equal to the sum of the extended prices (established for each separately identified item of Unit Price Work by multiplying the unit price times the actual quantity of that item):

Item No.	Description	Unit	Estimated Quantity	Bid Unit Price	Bid Price
1.	Tennis Court Equipment	Each	1	$	$
2.	Pickleball Court Equipment	Each	4	$	$
3.	HMA Surface Removal	Sq Yd	4,800	$	$
4.	Tennis Equipment Removal	Lump Sum	1	$	$
5.	Fence Removal	Lin Ft	850	$	$
6.	HMA 13A Base Course	Ton	150	$	$
7.	HMA 36A Wearing Course	Ton	150	$	$
8.	Aggregate Surface Course, 6 inch	Sq Yd	330	$	$
9.	Acrylic Sport Surface	Lump Sum	1	$	$
10.	Tennis Court Striping	Each	1	$	$
11.	Pickleball Court Striping	Each	4	$	$
12.	Fencing, 4 Foot	Lin Ft	110	$	$
13.	Fencing, 10 Foot	Lin Ft	600	$	$
14.	Fence Strip Footing	Lin Ft	710	$	$
15.	Trash Receptacle	Each	2	$	$
16.	Accessible Bench	Each	1	$	$
17.	Pavt Mrkg, Waterborne, 4 inch, Blue	Lin Ft	360	$	$
18.	Pavt Mrkg, Preformed Thermal, Accessible Sym	Each	6	$	$
19.	Post, Steel, 3 lb	Ft	72	$	$
20.	Sign, Type IIIA	Sq Ft	12	$	$
21.	Landscaping/ Site Restoration	Lump Sum	1	$	$
Total of all Extended Prices for Unit Price Work (subject to final adjustment based on actual quantities)					$

The extended prices for Unit Price Work set forth as of the Effective Date of the Contract are based on estimated quantities. As provided in Paragraph 13.03 of the General Conditions, estimated quantities are not guaranteed, and determinations of actual quantities and classifications are to be made by Engineer.

B. For all Work, at the prices stated in Contractor's Bid, attached hereto as an exhibit.

ARTICLE 6 – PAYMENT PROCEDURES

6.01 *Submittal and Processing of Payments*

A. Contractor shall submit Applications for Payment in accordance with Article 15 of the General Conditions. Applications for Payment will be processed by Engineer as provided in the General Conditions.

6.02 *Progress Payments; Retainage*

A. Owner shall make progress payments on account of the Contract Price on the basis of Contractor's Applications for Payment on or about the 1st day of each month during performance of the Work as provided in Paragraph 6.02.A.1 below, provided that such Applications for Payment have been submitted in a timely manner and otherwise meet the requirements of the Contract. All such payments will be measured by the Schedule of Values established as provided in the General Conditions (and in the case of Unit Price Work based on the number of units completed) or, in the event there is no Schedule of Values, as provided elsewhere in the Contract.

1. Prior to Substantial Completion, progress payments will be made in an amount equal to the percentage indicated below but, in each case, less the aggregate of payments previously made and less such amounts as Owner may withhold, including but not limited to liquidated damages, in accordance with the Contract

a. 90 percent of Work completed (with the balance being retainage). If the Work has been 50 percent completed as determined by Engineer, and if the character and progress of the Work have been satisfactory to Owner and Engineer, then as long as the character and progress of the Work remain satisfactory to Owner and Engineer, there will be no additional retainage; and

B. Upon Substantial Completion, Owner shall pay an amount sufficient to increase total payments to Contractor to 95 percent of the Work completed, less such amounts set off by Owner pursuant to Paragraph 15.01.E of the General Conditions, and less 50 percent of Engineer's estimate of the value of Work to be completed or corrected as shown on the punch list of items to be completed or corrected prior to final payment.

6.03 *Final Payment*

A. Upon final completion and acceptance of the Work in accordance with Paragraph 15.06 of the General Conditions, Owner shall pay the remainder of the Contract Price as recommended by Engineer as provided in said Paragraph 15.06.

ARTICLE 7 – INTEREST

7.01 All amounts not paid when due shall bear interest at the rate of *0* percent per annum.

ARTICLE 8 – CONTRACTOR'S REPRESENTATIONS

8.01 In order to induce Owner to enter into this Contract, Contractor makes the following representations:

A. Contractor has examined and carefully studied the Contract Documents, and any data and reference items identified in the Contract Documents.

B. Contractor has visited the Site, conducted a thorough, alert visual examination of the Site and adjacent areas, and become familiar with and is satisfied as to the general, local, and Site conditions that may affect cost, progress, and performance of the Work.

C. Contractor is familiar with and is satisfied as to all Laws and Regulations that may affect cost, progress, and performance of the Work.

D. Contractor has carefully studied all: (1) reports of explorations and tests of subsurface conditions at or adjacent to the Site and all drawings of physical conditions relating to existing surface or subsurface structures at the Site that have been identified in the Supplementary Conditions, especially with respect to Technical Data in such reports and drawings, and (2) reports and drawings relating to Hazardous Environmental Conditions, if

any, at or adjacent to the Site that have been identified in the Supplementary Conditions, especially with respect to Technical Data in such reports and drawings.

E. Contractor has considered the information known to Contractor itself; information commonly known to contractors doing business in the locality of the Site; information and observations obtained from visits to the Site; the Contract Documents; and the Site-related reports and drawings identified in the Contract Documents, with respect to the effect of such information, observations, and documents on (1) the cost, progress, and performance of the Work; (2) the means, methods, techniques, sequences, and procedures of construction to be employed by Contractor; and (3) Contractor's safety precautions and programs.

F. Based on the information and observations referred to in the preceding paragraph, Contractor agrees that no further examinations, investigations, explorations, tests, studies, or data are necessary for the performance of the Work at the Contract Price, within the Contract Times, and in accordance with the other terms and conditions of the Contract.

G. Contractor is aware of the general nature of work to be performed by Owner and others at the Site that relates to the Work as indicated in the Contract Documents.

H. Contractor has given Engineer written notice of all conflicts, errors, ambiguities, or discrepancies that Contractor has discovered in the Contract Documents, and the written resolution thereof by Engineer is acceptable to Contractor.

I. The Contract Documents are generally sufficient to indicate and convey understanding of all terms and conditions for performance and furnishing of the Work.

J. Contractor's entry into this Contract constitutes an incontrovertible representation by Contractor that without exception all prices in the Agreement are premised upon performing and furnishing the Work required by the Contract Documents.

ARTICLE 9 – CONTRACT DOCUMENTS

9.01 *Contents*

A. The Contract Documents consist of the following:

1. This Agreement (pages 1 to 7, inclusive).
2. Performance bond (pages 1 to 3, inclusive).
3. Payment bond (pages 1 to 4, inclusive).
4. General Conditions (pages 1 to 65, inclusive).
5. Supplementary Conditions (pages 1 to 5, inclusive).
6. Specifications as listed in the table of contents of the Project Manual.
7. The Drawings are listed on the document title page.
8. Addenda (numbers ___ to ___, inclusive).
9. Exhibits to this Agreement (enumerated as follows):
    a. Contractor's Bid (pages ___ to ___, inclusive).
10. The following which may be delivered or issued on or after the Effective Date of the Contract and are not attached hereto:
    a. Notice to Proceed.
    b. Work Change Directives.
    c. Change Orders.

d. Field Orders.

B. The documents listed in Paragraph 9.01.A are attached to this Agreement (except as expressly noted otherwise above).

C. There are no Contract Documents other than those listed above in this Article 9.

D. The Contract Documents may only be amended, modified, or supplemented as provided in the General Conditions.

ARTICLE 10 – MISCELLANEOUS

10.01 *Terms*

A. Terms used in this Agreement will have the meanings stated in the General Conditions and the Supplementary Conditions.

10.02 *Assignment of Contract*

A. Unless expressly agreed to elsewhere in the Contract, no assignment by a party hereto of any rights under or interests in the Contract will be binding on another party hereto without the written consent of the party sought to be bound; and, specifically but without limitation, money that may become due and money that is due may not be assigned without such consent (except to the extent that the effect of this restriction may be limited by law), and unless specifically stated to the contrary in any written consent to an assignment, no assignment will release or discharge the assignor from any duty or responsibility under the Contract Documents.

10.03 *Successors and Assigns*

A. Owner and Contractor each binds itself, its successors, assigns, and legal representatives to the other party hereto, its successors, assigns, and legal representatives in respect to all covenants, agreements, and obligations contained in the Contract Documents.

10.04 *Severability*

A. Any provision or part of the Contract Documents held to be void or unenforceable under any Law or Regulation shall be deemed stricken, and all remaining provisions shall continue to be valid and binding upon Owner and Contractor, who agree that the Contract Documents shall be reformed to replace such stricken provision or part thereof with a valid and enforceable provision that comes as close as possible to expressing the intention of the stricken provision.

10.05 *Contractor's Certifications*

A. Contractor certifies that it has not engaged in corrupt, fraudulent, collusive, or coercive practices in competing for or in executing the Contract. For the purposes of this Paragraph 10.05:

1. "corrupt practice" means the offering, giving, receiving, or soliciting of any thing of value likely to influence the action of a public official in the bidding process or in the Contract execution;

2. "fraudulent practice" means an intentional misrepresentation of facts made (a) to influence the bidding process or the execution of the Contract to the detriment of Owner, (b) to establish Bid or Contract prices at artificial non-competitive levels, or (c) to deprive Owner of the benefits of free and open competition;

3. "collusive practice" means a scheme or arrangement between two or more Bidders, with or without the knowledge of Owner, a purpose of which is to establish Bid prices at artificial, non-competitive levels; and

4. "coercive practice" means harming or threatening to harm, directly or indirectly, persons or their property to influence their participation in the bidding process or affect the execution of the Contract.

10.06 *Other Provisions*

A. Owner stipulates that if the General Conditions that are made a part of this Contract are based on EJCDC® C-700, Standard General Conditions for the Construction Contract, published by the Engineers Joint Contract Documents Committee®, and if Owner is the party that has furnished said General Conditions, then Owner has plainly shown all modifications to the standard wording of such published document to the Contractor, through a process such as highlighting or "track changes" (redline/strikeout), or in the Supplementary Conditions.

B. Equal Opportunity

Contractor shall not discriminate against an employee or applicant for employment with respect to hire, tenure, terms, conditions, or privileges of employment, or a matter directly or indirectly related to employment, because of race, color, religion, national origin, age, sex, height, weight, marital status, or because of a handicap that is unrelated to the person's ability to perform the duties of a particular job or position.

IN WITNESS WHEREOF, Owner and Contractor have signed this Agreement.

This Agreement will be effective on _____ (which is the Effective Date of the Contract).

OWNER:	CONTRACTOR:
_____	_____
By: _____	By: _____
Title: _____	Title: _____
Attest: _____	Attest: _____
Title: _____	Title: _____
Address for giving notices:	Address for giving notices:
_____	_____
_____	_____
_____	_____

NOTICE TO PROCEED

Owner:	Ypsilanti Charter Township	Owner's Contract No.:	
Contractor:		Contractor's Project No.:	
Engineer:	Spicer Group, Inc.	Engineer's Project No.:	129784SG2020
Project:	Community Center Park Improvements	Contract Name:	Community Center Park Improvements
		Effective Date of Contract:	

TO CONTRACTOR:

Owner hereby notifies Contractor that the Contract Times under the above Contract will commence to run on _____ __, **2023**. *[see Paragraph 4.01 of the General Conditions]*

On that date, Contractor shall start performing its obligations under the Contract Documents. No Work shall be done at the Site prior to such date. In accordance with the Agreement, the date of Substantial Completion is _____ __, **2023**, and the date of readiness for final payment is _____ __, **2023**.

Before starting any Work at the Site, Contractor must comply with the following:

[Note any access limitations, security procedures, or other restrictions]

Owner**:**

	_____		_____
	Authorized Signature		Authorized Signature
By:		By:	
	_____		_____
Title:	_____	Title:	_____
Date Issued:	_____	Date Issued:	_____

Copy: Engineer

PERFORMANCE BOND

CONTRACTOR *(name and address)*:

SURETY *(name and address of principal place of business)*:

OWNER *(name and address)*:
Ypsilanti Charter Township
7200 S Huron River Dr
Ypsilanti, MI 48197

CONSTRUCTION CONTRACT
Effective Date of the Agreement:
Amount:
Description *(name and location)*:

BOND
Bond Number:
Date *(not earlier than the Effective Date of the Agreement of the Construction Contract)*:
Amount:
Modifications to this Bond Form: ☐ None ☐ See Paragraph 16

Surety and Contractor, intending to be legally bound hereby, subject to the terms set forth below, do each cause this Performance Bond to be duly executed by an authorized officer, agent, or representative.

CONTRACTOR AS PRINCIPAL

_____ *(seal)*
Contractor's Name and Corporate Seal

By: _____
Signature

_____
Print Name

_____
Title

Attest:_____
_____
Signature

_____
Title

SURETY

_____ *(seal)*
Surety's Name and Corporate Seal

By:_____
Signature *(attach power of attorney)*

_____
Print Name

_____
Title

Attest:_____

Signature

_____
Title

Notes: (1) Provide supplemental execution by any additional parties, such as joint venturers. (2) Any singular reference to Contractor, Surety, Owner, or other party shall be considered plural where applicable.

1. The Contractor and Surety, jointly and severally, bind themselves, their heirs, executors, administrators, successors, and assigns to the Owner for the performance of the Construction Contract, which is incorporated herein by reference.

2. If the Contractor performs the Construction Contract, the Surety and the Contractor shall have no obligation under this Bond, except when applicable to participate in a conference as provided in Paragraph 3.

3. If there is no Owner Default under the Construction Contract, the Surety's obligation under this Bond shall arise after:

3.1 The Owner first provides notice to the Contractor and the Surety that the Owner is considering declaring a Contractor Default. Such notice shall indicate whether the Owner is requesting a conference among the Owner, Contractor, and Surety to discuss the Contractor's performance. If the Owner does not request a conference, the Surety may, within five (5) business days after receipt of the Owner's notice, request such a conference. If the Surety timely requests a conference, the Owner shall attend. Unless the Owner agrees otherwise, any conference requested under this Paragraph 3.1 shall be held within ten (10) business days of the Surety's receipt of the Owner's notice. If the Owner, the Contractor, and the Surety agree, the Contractor shall be allowed a reasonable time to perform the Construction Contract, but such an agreement shall not waive the Owner's right, if any, subsequently to declare a Contractor Default;

3.2 The Owner declares a Contractor Default, terminates the Construction Contract and notifies the Surety; and

3.3 The Owner has agreed to pay the Balance of the Contract Price in accordance with the terms of the Construction Contract to the Surety or to a contractor selected to perform the Construction Contract.

4. Failure on the part of the Owner to comply with the notice requirement in Paragraph 3.1 shall not constitute a failure to comply with a condition precedent to the Surety's obligations, or release the Surety from its obligations, except to the extent the Surety demonstrates actual prejudice.

5. When the Owner has satisfied the conditions of Paragraph 3, the Surety shall promptly and at the Surety's expense take one of the following actions:

5.1 Arrange for the Contractor, with the consent of the Owner, to perform and complete the Construction Contract;

5.2 Undertake to perform and complete the Construction Contract itself, through its agents or independent contractors;

5.3 Obtain bids or negotiated proposals from qualified contractors acceptable to the Owner for a contract for performance and completion of the Construction Contract, arrange for a contract to be prepared for execution by the Owner and a contractor selected with the Owners concurrence, to be secured with performance and payment bonds executed by a qualified surety equivalent to the bonds issued on the Construction Contract, and pay to the Owner the amount of damages as described in Paragraph 7 in excess of the Balance of the Contract Price incurred by the Owner as a result of the Contractor Default; or

5.4 Waive its right to perform and complete, arrange for completion, or obtain a new contractor, and with reasonable promptness under the circumstances:

5.4.1 After investigation, determine the amount for which it may be liable to the Owner and, as soon as practicable after the amount is determined, make payment to the Owner; or

5.4.2 Deny liability in whole or in part and notify the Owner, citing the reasons for denial.

6. If the Surety does not proceed as provided in Paragraph 5 with reasonable promptness, the Surety shall be deemed to be in default on this Bond seven days after receipt of an additional written notice from the Owner to the Surety demanding that the Surety perform its obligations under this Bond, and the Owner shall be entitled to enforce any remedy available to the Owner. If the Surety proceeds as provided in Paragraph 5.4, and the Owner refuses the payment or the Surety has denied liability, in whole or in part, without further notice the Owner shall be entitled to enforce any remedy available to the Owner.

7. If the Surety elects to act under Paragraph 5.1, 5.2, or 5.3, then the responsibilities of the Surety to the Owner shall not be greater than those of the Contractor under the Construction Contract, and the responsibilities of the Owner to the Surety shall not be greater than those of the Owner under the Construction Contract. Subject to the commitment by the Owner to pay the Balance of the Contract Price, the Surety is obligated, without duplication for:

7.1 the responsibilities of the Contractor for correction of defective work and completion of the Construction Contract;

7.2 additional legal, design professional, and delay costs resulting from the Contractor's Default, and resulting from the actions or failure to act of the Surety under Paragraph 5; and

7.3 liquidated damages, or if no liquidated damages are specified in the Construction Contract, actual damages caused by delayed performance or non-performance of the Contractor.

8. If the Surety elects to act under Paragraph 5.1, 5.3, or 5.4, the Surety's liability is limited to the amount of this Bond.

9. The Surety shall not be liable to the Owner or others for obligations of the Contractor that are unrelated to the Construction Contract, and the Balance of the Contract Price shall not be reduced or set off on account of any such unrelated obligations. No right of action shall accrue on this Bond to any person or entity other than the Owner or its heirs, executors, administrators, successors, and assigns.

10. The Surety hereby waives notice of any change, including changes of time, to the Construction Contract or to related subcontracts, purchase orders, and other obligations.

11. Any proceeding, legal or equitable, under this Bond may be instituted in any court of competent jurisdiction in the location in which the work or part of the work is located and shall be instituted within two years after a declaration of Contractor Default or within two years after the Contractor ceased working or within two years after the Surety refuses or fails to perform its obligations under this Bond, whichever occurs first. If the provisions of this paragraph are void or prohibited by law, the minimum periods of limitations available to sureties as a defense in the jurisdiction of the suit shall be applicable.

12. Notice to the Surety, the Owner, or the Contractor shall be mailed or delivered to the address shown on the page on which their signature appears.

13. When this Bond has been furnished to comply with a statutory or other legal requirement in the location where the construction was to be performed, any provision in this Bond conflicting with said statutory or legal requirement shall be deemed deleted herefrom and provisions conforming to such statutory or other legal requirement shall be deemed incorporated herein. When so furnished, the intent is that this Bond shall be construed as a statutory bond and not as a common law bond.

14. Definitions

14.1 Balance of the Contract Price: The total amount payable by the Owner to the Contractor under the Construction Contract after all proper adjustments have been made including allowance for the Contractor for any amounts received or to be received by the Owner in settlement of insurance or other claims for damages to which the Contractor is entitled, reduced by all valid and proper payments made to or on behalf of the Contractor under the Construction Contract.

14.2 Construction Contract: The agreement between the Owner and Contractor identified on the cover page, including all Contract Documents and changes made to the agreement and the Contract Documents.

14.3 Contractor Default: Failure of the Contractor, which has not been remedied or waived, to perform or otherwise to comply with a material term of the Construction Contract.

14.4 Owner Default: Failure of the Owner, which has not been remedied or waived, to pay the Contractor as required under the Construction Contract or to perform and complete or comply with the other material terms of the Construction Contract.

14.5 Contract Documents: All the documents that comprise the agreement between the Owner and Contractor.

15. If this Bond is issued for an agreement between a contractor and subcontractor, the term Contractor in this Bond shall be deemed to be Subcontractor and the term Owner shall be deemed to be Contractor.

16. Modifications to this Bond are as follows:

PAYMENT BOND

CONTRACTOR *(name and address)*:

SURETY *(name and address of principal place of business)*:

OWNER *(name and address)*:
Ypsilanti Charter Township
7200 S Huron River Dr
Ypsilanti, MI 48197

CONSTRUCTION CONTRACT
Effective Date of the Agreement:
Amount:
Description *(name and location)*:

BOND
Bond Number:
Date *(not earlier than the Effective Date of the Agreement of the Construction Contract)*:
Amount:
Modifications to this Bond Form: ☐ None ☐ See Paragraph 18

Surety and Contractor, intending to be legally bound hereby, subject to the terms set forth below, do each cause this Payment Bond to be duly executed by an authorized officer, agent, or representative.

CONTRACTOR AS PRINCIPAL	**SURETY**
_____ *(seal)*	_____ *(seal)*
Contractor's Name and Corporate Seal	Surety's Name and Corporate Seal
By: _____	**By:** _____
Signature	Signature *(attach power of attorney)*
_____	_____
Print Name	Print Name
_____	_____
Title	Title
Attest: _____	**Attest:** _____
Signature	Signature
_____	_____
Title	Title

Notes: (1) Provide supplemental execution by any additional parties, such as joint venturers. (2) Any singular reference to Contractor, Surety, Owner, or other party shall be considered plural where applicable.

1. The Contractor and Surety, jointly and severally, bind themselves, their heirs, executors, administrators, successors, and assigns to the Owner to pay for labor, materials, and equipment furnished for use in the performance of the Construction Contract, which is incorporated herein by reference, subject to the following terms.

2. If the Contractor promptly makes payment of all sums due to Claimants, and defends, indemnifies, and holds harmless the Owner from claims, demands, liens, or suits by any person or entity seeking payment for labor, materials, or equipment furnished for use in the performance of the Construction Contract, then the Surety and the Contractor shall have no obligation under this Bond.

3. If there is no Owner Default under the Construction Contract, the Surety's obligation to the Owner under this Bond shall arise after the Owner has promptly notified the Contractor and the Surety (at the address described in Paragraph 13) of claims, demands, liens, or suits against the Owner or the Owner's property by any person or entity seeking payment for labor, materials, or equipment furnished for use in the performance of the Construction Contract, and tendered defense of such claims, demands, liens, or suits to the Contractor and the Surety.

4. When the Owner has satisfied the conditions in Paragraph 3, the Surety shall promptly and at the Surety's expense defend, indemnify, and hold harmless the Owner against a duly tendered claim, demand, lien, or suit.

5. The Surety's obligations to a Claimant under this Bond shall arise after the following:

   5.1 Claimants who do not have a direct contract with the Contractor,

      5.1.1 have furnished a written notice of non-payment to the Contractor, stating with substantial accuracy the amount claimed and the name of the party to whom the materials were, or equipment was, furnished or supplied or for whom the labor was done or performed, within ninety (90) days after having last performed labor or last furnished materials or equipment included in the Claim; and

      5.1.2 have sent a Claim to the Surety (at the address described in Paragraph 13).

   5.2 Claimants who are employed by or have a direct contract with the Contractor have sent a Claim to the Surety (at the address described in Paragraph 13).

6. If a notice of non-payment required by Paragraph 5.1.1 is given by the Owner to the Contractor, that is sufficient to satisfy a Claimant's obligation to furnish a written notice of non-payment under Paragraph 5.1.1.

7. When a Claimant has satisfied the conditions of Paragraph 5.1 or 5.2, whichever is applicable, the Surety shall promptly and at the Surety's expense take the following actions:

   7.1 Send an answer to the Claimant, with a copy to the Owner, within sixty (60) days after receipt of the Claim, stating the amounts that are undisputed and the basis for challenging any amounts that are disputed; and

   7.2 Pay or arrange for payment of any undisputed amounts.

   7.3 The Surety's failure to discharge its obligations under Paragraph 7.1 or 7.2 shall not be deemed to constitute a waiver of defenses the Surety or Contractor may have or acquire as to a Claim, except as to undisputed amounts for which the Surety and Claimant have reached agreement. If, however, the Surety fails to discharge its obligations under Paragraph 7.1 or 7.2, the Surety shall indemnify the Claimant for the reasonable attorney's fees the Claimant incurs thereafter to recover any sums found to be due and owing to the Claimant.

8. The Surety's total obligation shall not exceed the amount of this Bond, plus the amount of reasonable attorney's fees provided under Paragraph 7.3, and the amount of this Bond shall be credited for any payments made in good faith by the Surety.

9. Amounts owed by the Owner to the Contractor under the Construction Contract shall be used for the performance of the Construction Contract and to satisfy claims, if any, under any construction performance bond. By the Contractor furnishing and the Owner accepting this Bond, they agree that all funds earned by the Contractor in the performance of the Construction Contract are dedicated to satisfy obligations of the Contractor and Surety under this Bond, subject to the Owner's priority to use the funds for the completion of the work.

10. The Surety shall not be liable to the Owner, Claimants, or others for obligations of the Contractor that are unrelated to the Construction Contract. The Owner shall not be liable for the payment of any costs or expenses of any Claimant under this Bond,

and shall have under this Bond no obligation to make payments to or give notice on behalf of Claimants, or otherwise have any obligations to Claimants under this Bond.

11. The Surety hereby waives notice of any change, including changes of time, to the Construction Contract or to related subcontracts, purchase orders, and other obligations.

12. No suit or action shall be commenced by a Claimant under this Bond other than in a court of competent jurisdiction in the state in which the project that is the subject of the Construction Contract is located or after the expiration of one year from the date (1) on which the Claimant sent a Claim to the Surety pursuant to Paragraph 5.1.2 or 5.2, or (2) on which the last labor or service was performed by anyone or the last materials or equipment were furnished by anyone under the Construction Contract, whichever of (1) or (2) first occurs. If the provisions of this paragraph are void or prohibited by law, the minimum period of limitation available to sureties as a defense in the jurisdiction of the suit shall be applicable.

13. Notice and Claims to the Surety, the Owner, or the Contractor shall be mailed or delivered to the address shown on the page on which their signature appears. Actual receipt of notice or Claims, however accomplished, shall be sufficient compliance as of the date received.

14. When this Bond has been furnished to comply with a statutory or other legal requirement in the location where the construction was to be performed, any provision in this Bond conflicting with said statutory or legal requirement shall be deemed deleted herefrom and provisions conforming to such statutory or other legal requirement shall be deemed incorporated herein. When so furnished, the intent is that this Bond shall be construed as a statutory bond and not as a common law bond.

15. Upon requests by any person or entity appearing to be a potential beneficiary of this Bond, the Contractor and Owner shall promptly furnish a copy of this Bond or shall permit a copy to be made.

16. **Definitions**

    16.1 **Claim:** A written statement by the Claimant including at a minimum:

        1. The name of the Claimant;
        2. The name of the person for whom the labor was done, or materials or equipment furnished;
        3. A copy of the agreement or purchase order pursuant to which labor, materials, or equipment was furnished for use in the performance of the Construction Contract;
        4. A brief description of the labor, materials, or equipment furnished;
        5. The date on which the Claimant last performed labor or last furnished materials or equipment for use in the performance of the Construction Contract;
        6. The total amount earned by the Claimant for labor, materials, or equipment furnished as of the date of the Claim;
        7. The total amount of previous payments received by the Claimant; and
        8. The total amount due and unpaid to the Claimant for labor, materials, or equipment furnished as of the date of the Claim.

    16.2 **Claimant:** An individual or entity having a direct contract with the Contractor or with a subcontractor of the Contractor to furnish labor, materials, or equipment for use in the performance of the Construction Contract. The term Claimant also includes any individual or entity that has rightfully asserted a claim under an applicable mechanic's lien or similar statute against the real property upon which the Project is located. The intent of this Bond shall be to include without limitation in the terms of "labor, materials, or equipment" that part of the water, gas, power, light, heat, oil, gasoline, telephone service, or rental equipment used in the Construction Contract, architectural and engineering services required for performance of the work of the Contractor and the Contractor's subcontractors, and all other items for which a mechanic's lien may be asserted in the jurisdiction where the labor, materials, or equipment were furnished.

    16.3 **Construction Contract:** The agreement between the Owner and Contractor identified on the cover page, including all Contract Documents and all changes made to the agreement and the Contract Documents.

    16.4 **Owner Default**: Failure of the Owner, which has not been remedied or waived, to pay the Contractor as required under the Construction Contract or to perform and complete or comply with the other material terms of the Construction Contract.

    16.5 **Contract Documents:** All the documents that comprise the agreement between the Owner and Contractor.

17. If this Bond is issued for an agreement between a contractor and subcontractor, the term Contractor in

this Bond shall be deemed to be Subcontractor and the term Owner shall be deemed to be Contractor.

18. Modifications to this Bond are as follows:

CERTIFICATE OF SUBSTANTIAL COMPLETION

Owner:	Ypsilanti Charter Township	Owner's Contract No.:	
Contractor:		Contractor's Project No.:	
Engineer:	Spicer Group, Inc.	Engineer's Project No.:	129784SG2020
Project:	Community Center Park Improvements	Contract Name:	

This [preliminary] [final] Certificate of Substantial Completion applies to:

☐ All Work ☐ The following specified portions of the Work:

Date of Substantial Completion

The Work to which this Certificate applies has been inspected by authorized representatives of Owner, Contractor, and Engineer, and found to be substantially complete. The Date of Substantial Completion of the Work or portion thereof designated above is hereby established, subject to the provisions of the Contract pertaining to Substantial Completion. The date of Substantial Completion in the final Certificate of Substantial Completion marks the commencement of the contractual correction period and applicable warranties required by the Contract.

A punch list of items to be completed or corrected is attached to this Certificate. This list may not be all-inclusive, and the failure to include any items on such list does not alter the responsibility of the Contractor to complete all Work in accordance with the Contract.

The responsibilities between Owner and Contractor for security, operation, safety, maintenance, heat, utilities, insurance, and warranties upon Owner's use or occupancy of the Work shall be as provided in the Contract, except as amended as follows: *[Note: Amendments of contractual responsibilities recorded in this Certificate should be the product of mutual agreement of Owner and Contractor; see Paragraph 15.03.D of the General Conditions.]*

Amendments to Owner's responsibilities:
☐ None
☐ As follows

Amendments to Contractor's responsibilities:
☐ None
☐ As follows:

The following documents are attached to and made a part of this Certificate: *[punch list; others]*

This Certificate does not constitute an acceptance of Work not in accordance with the Contract Documents, nor is it a release of Contractor's obligation to complete the Work in accordance with the Contract.

EXECUTED BY ENGINEER:	RECEIVED:	RECEIVED:
By: _____ (Authorized signature)	By: _____ Owner (Authorized Signature)	By: _____ Contractor (Authorized Signature)
Title: _____	Title: _____	Title: _____
Date: _____	Date: _____	Date: _____

STANDARD GENERAL CONDITIONS OF THE CONSTRUCTION CONTRACT

TABLE OF CONTENTS

Page

Article 1 – Definitions and Terminology 5

1.01 Defined Terms 5

1.02 Terminology 8

Article 2 – Preliminary Matters 9

2.01 Delivery of Bonds and Evidence of Insurance 9

2.02 Copies of Documents 10

2.03 Before Starting Construction 10

2.04 Preconstruction Conference; Designation of Authorized Representatives 10

2.05 Initial Acceptance of Schedules 10

2.06 Electronic Transmittals 11

Article 3 – Documents: Intent, Requirements, Reuse 11

3.01 Intent 11

3.02 Reference Standards 11

3.03 Reporting and Resolving Discrepancies 12

3.04 Requirements of the Contract Documents 13

3.05 Reuse of Documents 13

Article 4 – Commencement and Progress of the Work 13

4.01 Commencement of Contract Times; Notice to Proceed 13

4.02 Starting the Work 13

4.03 Reference Points 14

4.04 Progress Schedule 14

4.05 Delays in Contractor's Progress 14

Article 5 – Availability of Lands; Subsurface and Physical Conditions; Hazardous Environmental Conditions 15

5.01 Availability of Lands 15

5.02 Use of Site and Other Areas 15

5.03 Subsurface and Physical Conditions 16

5.04 Differing Subsurface or Physical Conditions 17

5.05 Underground Facilities 18

5.06 Hazardous Environmental Conditions at Site 19

Article 6 – Bonds and Insurance 21

6.01 Performance, Payment, and Other Bonds 21

6.02 Insurance—General Provisions 22
6.03 Contractor's Insurance 23
6.04 Owner's Liability Insurance 25
6.05 Property Insurance 25
6.06 Waiver of Rights 27
6.07 Receipt and Application of Property Insurance Proceeds 28
Article 7 – Contractor's Responsibilities 28
7.01 Supervision and Superintendence 28
7.02 Labor; Working Hours 28
7.03 Services, Materials, and Equipment 28
7.04 "Or Equals" 29
7.05 Substitutes 30
7.06 Concerning Subcontractors, Suppliers, and Others 31
7.07 Patent Fees and Royalties 32
7.08 Permits 33
7.09 Taxes 33
7.10 Laws and Regulations 33
7.11 Record Documents 34
7.12 Safety and Protection 34
7.13 Safety Representative 35
7.14 Hazard Communication Programs 35
7.15 Emergencies 35
7.16 Shop Drawings, Samples, and Other Submittals 35
7.17 Contractor's General Warranty and Guarantee 37
7.18 Indemnification 38
7.19 Delegation of Professional Design Services 38
Article 8 – Other Work at the Site 39
8.01 Other Work 39
8.02 Coordination 40
8.03 Legal Relationships 40
Article 9 – Owner's Responsibilities 41
9.01 Communications to Contractor 41
9.02 Replacement of Engineer 41
9.03 Furnish Data 41
9.04 Pay When Due 41
9.05 Lands and Easements; Reports, Tests, and Drawings 41

9.06 Insurance 41
9.07 Change Orders 41
9.08 Inspections, Tests, and Approvals 41
9.09 Limitations on Owner's Responsibilities 42
9.10 Undisclosed Hazardous Environmental Condition 42
9.11 Evidence of Financial Arrangements 42
9.12 Safety Programs 42
Article 10 – Engineer's Status During Construction 42
10.01 Owner's Representative 42
10.02 Visits to Site 42
10.03 Project Representative 42
10.04 Rejecting Defective Work 43
10.05 Shop Drawings, Change Orders and Payments 43
10.06 Determinations for Unit Price Work 43
10.07 Decisions on Requirements of Contract Documents and Acceptability of Work 43
10.08 Limitations on Engineer's Authority and Responsibilities 43
10.09 Compliance with Safety Program 44
Article 11 – Amending the Contract Documents; Changes in the Work 44
11.01 Amending and Supplementing Contract Documents 44
11.02 Owner-Authorized Changes in the Work 44
11.03 Unauthorized Changes in the Work 45
11.04 Change of Contract Price 45
11.05 Change of Contract Times 46
11.06 Change Proposals 46
11.07 Execution of Change Orders 47
11.08 Notification to Surety 47
Article 12 – Claims 47
12.01 Claims 47
Article 13 – Cost of the Work; Allowances; Unit Price Work 48
13.01 Cost of the Work 48
13.02 Allowances 51
13.03 Unit Price Work 51
Article 14 – Tests and Inspections; Correction, Removal or Acceptance of Defective Work 52
14.01 Access to Work 52
14.02 Tests, Inspections, and Approvals 52
14.03 Defective Work 53

14.04 Acceptance of Defective Work 53
14.05 Uncovering Work 54
14.06 Owner May Stop the Work 54
14.07 Owner May Correct Defective Work 54
Article 15 – Payments to Contractor; Set-Offs; Completion; Correction Period 55
15.01 Progress Payments 55
15.02 Contractor's Warranty of Title 58
15.03 Substantial Completion 58
15.04 Partial Use or Occupancy 58
15.05 Final Inspection 59
15.06 Final Payment 59
15.07 Waiver of Claims 60
15.08 Correction Period 61
Article 16 – Suspension of Work and Termination 61
16.01 Owner May Suspend Work 61
16.02 Owner May Terminate for Cause 62
16.03 Owner May Terminate For Convenience 63
16.04 Contractor May Stop Work or Terminate 63
Article 17 – Final Resolution of Disputes 63
17.01 Methods and Procedures 63
Article 18 – Miscellaneous 64
18.01 Giving Notice 64
18.02 Computation of Times 64
18.03 Cumulative Remedies 64
18.04 Limitation of Damages 64
18.05 No Waiver 64
18.06 Survival of Obligations 64
18.07 Controlling Law 64
18.08 Headings 65

ARTICLE 1 – DEFINITIONS AND TERMINOLOGY

1.01 *Defined Terms*

A. Wherever used in the Bidding Requirements or Contract Documents, a term printed with initial capital letters, including the term's singular and plural forms, will have the meaning indicated in the definitions below. In addition to terms specifically defined, terms with initial capital letters in the Contract Documents include references to identified articles and paragraphs, and the titles of other documents or forms.

1. *Addenda*—Written or graphic instruments issued prior to the opening of Bids which clarify, correct, or change the Bidding Requirements or the proposed Contract Documents.

2. *Agreement*—The written instrument, executed by Owner and Contractor, that sets forth the Contract Price and Contract Times, identifies the parties and the Engineer, and designates the specific items that are Contract Documents.

3. *Application for Payment*—The form acceptable to Engineer which is to be used by Contractor during the course of the Work in requesting progress or final payments and which is to be accompanied by such supporting documentation as is required by the Contract Documents.

4. *Bid*—The offer of a Bidder submitted on the prescribed form setting forth the prices for the Work to be performed.

5. *Bidder*—An individual or entity that submits a Bid to Owner.

6. *Bidding Documents*—The Bidding Requirements, the proposed Contract Documents, and all Addenda.

7. *Bidding Requirements*—The advertisement or invitation to bid, Instructions to Bidders, Bid Bond or other Bid security, if any, the Bid Form, and the Bid with any attachments.

8. *Change Order*—A document which is signed by Contractor and Owner and authorizes an addition, deletion, or revision in the Work or an adjustment in the Contract Price or the Contract Times, or other revision to the Contract, issued on or after the Effective Date of the Contract.

9. *Change Proposal*—A written request by Contractor, duly submitted in compliance with the procedural requirements set forth herein, seeking an adjustment in Contract Price or Contract Times, or both; contesting an initial decision by Engineer concerning the requirements of the Contract Documents or the acceptability of Work under the Contract Documents; challenging a set-off against payments due; or seeking other relief with respect to the terms of the Contract.

10. *Claim*—(a) A demand or assertion by Owner directly to Contractor, duly submitted in compliance with the procedural requirements set forth herein: seeking an adjustment of Contract Price or Contract Times, or both; contesting an initial decision by Engineer concerning the requirements of the Contract Documents or the acceptability of Work under the Contract Documents; contesting Engineer's decision regarding a Change Proposal; seeking resolution of a contractual issue that Engineer has declined to address; or seeking other relief with respect to the terms of the Contract; or (b) a demand or assertion by Contractor directly to Owner, duly submitted in compliance with the procedural requirements set forth herein, contesting Engineer's decision regarding a Change Proposal; or seeking resolution of a contractual issue that Engineer has declined to address. A demand for money or services by a third party is not a Claim.

11. *Constituent of Concern*—Asbestos, petroleum, radioactive materials, polychlorinated biphenyls (PCBs), hazardous waste, and any substance, product, waste, or other material of any nature whatsoever that is or becomes listed, regulated, or addressed pursuant to (a) the Comprehensive Environmental Response, Compensation and Liability Act, 42 U.S.C. §§9601 et seq. ("CERCLA"); (b) the Hazardous Materials Transportation Act, 49 U.S.C. §§5501 et seq.; (c) the Resource Conservation and Recovery Act, 42 U.S.C. §§6901 et seq. ("RCRA"); (d) the Toxic Substances Control Act, 15 U.S.C. §§2601 et seq.; (e) the Clean Water Act, 33 U.S.C. §§1251 et seq.; (f) the Clean Air Act, 42 U.S.C. §§7401 et seq.; or (g) any other federal, state, or local statute, law, rule, regulation, ordinance, resolution, code, order, or decree regulating, relating to, or imposing liability or standards of conduct concerning, any hazardous, toxic, or dangerous waste, substance, or material.

12. *Contract*—The entire and integrated written contract between the Owner and Contractor concerning the Work.

13. *Contract Documents*—Those items so designated in the Agreement, and which together comprise the Contract.

14. *Contract Price*—The money that Owner has agreed to pay Contractor for completion of the Work in accordance with the Contract Documents. .

15. *Contract Times*—The number of days or the dates by which Contractor shall: (a) achieve Milestones, if any; (b) achieve Substantial Completion; and (c) complete the Work.

16. *Contractor*—The individual or entity with which Owner has contracted for performance of the Work.

17. *Cost of the Work*—See Paragraph 13.01 for definition.

18. *Drawings*—The part of the Contract that graphically shows the scope, extent, and character of the Work to be performed by Contractor.

19. *Effective Date of the Contract*—The date, indicated in the Agreement, on which the Contract becomes effective.

20. *Engineer*—The individual or entity named as such in the Agreement.

21. *Field Order*—A written order issued by Engineer which requires minor changes in the Work but does not change the Contract Price or the Contract Times.

22. *Hazardous Environmental Condition*—The presence at the Site of Constituents of Concern in such quantities or circumstances that may present a danger to persons or property exposed thereto. The presence at the Site of materials that are necessary for the execution of the Work, or that are to be incorporated in the Work, and that are controlled and contained pursuant to industry practices, Laws and Regulations, and the requirements of the Contract, does not establish a Hazardous Environmental Condition.

23. *Laws and Regulations; Laws or Regulations*—Any and all applicable laws, statutes, rules, regulations, ordinances, codes, and orders of any and all governmental bodies, agencies, authorities, and courts having jurisdiction.

24. *Liens*—Charges, security interests, or encumbrances upon Contract-related funds, real property, or personal property.

25. *Milestone*—A principal event in the performance of the Work that the Contract requires Contractor to achieve by an intermediate completion date or by a time prior to Substantial Completion of all the Work.

26. *Notice of Award*—The written notice by Owner to a Bidder of Owner's acceptance of the Bid.

27. *Notice to Proceed*—A written notice by Owner to Contractor fixing the date on which the Contract Times will commence to run and on which Contractor shall start to perform the Work.

28. *Owner*—The individual or entity with which Contractor has contracted regarding the Work, and which has agreed to pay Contractor for the performance of the Work, pursuant to the terms of the Contract.

29. *Progress Schedule*—A schedule, prepared and maintained by Contractor, describing the sequence and duration of the activities comprising the Contractor's plan to accomplish the Work within the Contract Times.

30. *Project*—The total undertaking to be accomplished for Owner by engineers, contractors, and others, including planning, study, design, construction, testing, commissioning, and start-up, and of which the Work to be performed under the Contract Documents is a part.

31. *Project Manual*—The written documents prepared for, or made available for, procuring and constructing the Work, including but not limited to the Bidding Documents or other construction procurement documents, geotechnical and existing conditions information, the Agreement, bond forms, General Conditions, Supplementary Conditions, and Specifications. The contents of the Project Manual may be bound in one or more volumes.

32. *Resident Project Representative*—The authorized representative of Engineer assigned to assist Engineer at the Site. As used herein, the term Resident Project Representative or "RPR" includes any assistants or field staff of Resident Project Representative.

33. *Samples*—Physical examples of materials, equipment, or workmanship that are representative of some portion of the Work and that establish the standards by which such portion of the Work will be judged.

34. *Schedule of Submittals*—A schedule, prepared and maintained by Contractor, of required submittals and the time requirements for Engineer's review of the submittals and the performance of related construction activities.

35. *Schedule of Values*—A schedule, prepared and maintained by Contractor, allocating portions of the Contract Price to various portions of the Work and used as the basis for reviewing Contractor's Applications for Payment.

36. *Shop Drawings*—All drawings, diagrams, illustrations, schedules, and other data or information that are specifically prepared or assembled by or for Contractor and submitted by Contractor to illustrate some portion of the Work. Shop Drawings, whether approved or not, are not Drawings and are not Contract Documents.

37. *Site*—Lands or areas indicated in the Contract Documents as being furnished by Owner upon which the Work is to be performed, including rights-of-way and easements, and such other lands furnished by Owner which are designated for the use of Contractor.

38. *Specifications*—The part of the Contract that consists of written requirements for materials, equipment, systems, standards, and workmanship as applied to the Work, and certain administrative requirements and procedural matters applicable to the Work.

39. *Subcontractor*—An individual or entity having a direct contract with Contractor or with any other Subcontractor for the performance of a part of the Work.

40. *Substantial Completion*—The time at which the Work (or a specified part thereof) has progressed to the point where, in the opinion of Engineer, the Work (or a specified part

thereof) is sufficiently complete, in accordance with the Contract Documents, so that the Work (or a specified part thereof) can be utilized for the purposes for which it is intended. The terms "substantially complete" and "substantially completed" as applied to all or part of the Work refer to Substantial Completion thereof.

41. *Successful Bidder*—The Bidder whose Bid the Owner accepts, and to which the Owner makes an award of contract, subject to stated conditions.

42. *Supplementary Conditions*—The part of the Contract that amends or supplements these General Conditions.

43. *Supplier*—A manufacturer, fabricator, supplier, distributor, materialman, or vendor having a direct contract with Contractor or with any Subcontractor to furnish materials or equipment to be incorporated in the Work by Contractor or a Subcontractor.

44. *Technical Data*—Those items expressly identified as Technical Data in the Supplementary Conditions, with respect to either (a) subsurface conditions at the Site, or physical conditions relating to existing surface or subsurface structures at the Site (except Underground Facilities) or (b) Hazardous Environmental Conditions at the Site. If no such express identifications of Technical Data have been made with respect to conditions at the Site, then the data contained in boring logs, recorded measurements of subsurface water levels, laboratory test results, and other factual, objective information regarding conditions at the Site that are set forth in any geotechnical or environmental report prepared for the Project and made available to Contractor are hereby defined as Technical Data with respect to conditions at the Site under Paragraphs 5.03, 5.04, and 5.06.

45. *Underground Facilities*—All underground pipelines, conduits, ducts, cables, wires, manholes, vaults, tanks, tunnels, or other such facilities or attachments, and any encasements containing such facilities, including but not limited to those that convey electricity, gases, steam, liquid petroleum products, telephone or other communications, fiber optic transmissions, cable television, water, wastewater, storm water, other liquids or chemicals, or traffic or other control systems.

46. *Unit Price Work*—Work to be paid for on the basis of unit prices.

47. *Work*—The entire construction or the various separately identifiable parts thereof required to be provided under the Contract Documents. Work includes and is the result of performing or providing all labor, services, and documentation necessary to produce such construction; furnishing, installing, and incorporating all materials and equipment into such construction; and may include related services such as testing, start-up, and commissioning, all as required by the Contract Documents.

48. *Work Change Directive*—A written directive to Contractor issued on or after the Effective Date of the Contract, signed by Owner and recommended by Engineer, ordering an addition, deletion, or revision in the Work.

1.02 *Terminology*

A. The words and terms discussed in the following paragraphs are not defined but, when used in the Bidding Requirements or Contract Documents, have the indicated meaning.

B. *Intent of Certain Terms or Adjectives*:

1. The Contract Documents include the terms "as allowed," "as approved," "as ordered," "as directed" or terms of like effect or import to authorize an exercise of professional judgment by Engineer. In addition, the adjectives "reasonable," "suitable," "acceptable," "proper," "satisfactory," or adjectives of like effect or import are used to describe an action or determination of Engineer as to the Work. It is intended that such exercise of professional judgment, action, or determination will be solely to evaluate, in

general, the Work for compliance with the information in the Contract Documents and with the design concept of the Project as a functioning whole as shown or indicated in the Contract Documents (unless there is a specific statement indicating otherwise). The use of any such term or adjective is not intended to and shall not be effective to assign to Engineer any duty or authority to supervise or direct the performance of the Work, or any duty or authority to undertake responsibility contrary to the provisions of Article 10 or any other provision of the Contract Documents.

C. *Day*:

1. The word "day" means a calendar day of 24 hours measured from midnight to the next midnight.

D. *Defective*:

1. The word "defective," when modifying the word "Work," refers to Work that is unsatisfactory, faulty, or deficient in that it:

a. does not conform to the Contract Documents; or

b. does not meet the requirements of any applicable inspection, reference standard, test, or approval referred to in the Contract Documents; or

c. has been damaged prior to Engineer's recommendation of final payment (unless responsibility for the protection thereof has been assumed by Owner at Substantial Completion in accordance with Paragraph 15.03 or 15.04).

E. *Furnish, Install, Perform, Provide*:

1. The word "furnish," when used in connection with services, materials, or equipment, shall mean to supply and deliver said services, materials, or equipment to the Site (or some other specified location) ready for use or installation and in usable or operable condition.

2. The word "install," when used in connection with services, materials, or equipment, shall mean to put into use or place in final position said services, materials, or equipment complete and ready for intended use.

3. The words "perform" or "provide," when used in connection with services, materials, or equipment, shall mean to furnish and install said services, materials, or equipment complete and ready for intended use.

4. If the Contract Documents establish an obligation of Contractor with respect to specific services, materials, or equipment, but do not expressly use any of the four words "furnish," "install," "perform," or "provide," then Contractor shall furnish and install said services, materials, or equipment complete and ready for intended use.

F. Unless stated otherwise in the Contract Documents, words or phrases that have a well-known technical or construction industry or trade meaning are used in the Contract Documents in accordance with such recognized meaning.

ARTICLE 2 – PRELIMINARY MATTERS

2.01 *Delivery of Bonds and Evidence of Insurance*

A. *Bonds*: When Contractor delivers the executed counterparts of the Agreement to Owner, Contractor shall also deliver to Owner such bonds as Contractor may be required to furnish.

B. *Evidence of Contractor's Insurance*: When Contractor delivers the executed counterparts of the Agreement to Owner, Contractor shall also deliver to Owner, with copies to each named insured and additional insured (as identified in the Supplementary Conditions or elsewhere

in the Contract), the certificates and other evidence of insurance required to be provided by Contractor in accordance with Article 6.

C. *Evidence of Owner's Insurance*: After receipt of the executed counterparts of the Agreement and all required bonds and insurance documentation, Owner shall promptly deliver to Contractor, with copies to each named insured and additional insured (as identified in the Supplementary Conditions or otherwise), the certificates and other evidence of insurance required to be provided by Owner under Article 6.

2.02 *Copies of Documents*

A. Owner shall furnish to Contractor four printed copies of the Contract (including one fully executed counterpart of the Agreement), and one copy in electronic portable document format (PDF). Additional printed copies will be furnished upon request at the cost of reproduction.

B. Owner shall maintain and safeguard at least one original printed record version of the Contract, including Drawings and Specifications signed and sealed by Engineer and other design professionals. Owner shall make such original printed record version of the Contract available to Contractor for review. Owner may delegate the responsibilities under this provision to Engineer.

2.03 *Before Starting Construction*

A. *Preliminary Schedules*: Within 10 days after the Effective Date of the Contract (or as otherwise specifically required by the Contract Documents), Contractor shall submit to Engineer for timely review:

1. a preliminary Progress Schedule indicating the times (numbers of days or dates) for starting and completing the various stages of the Work, including any Milestones specified in the Contract;

2. a preliminary Schedule of Submittals; and

3. a preliminary Schedule of Values for all of the Work which includes quantities and prices of items which when added together equal the Contract Price and subdivides the Work into component parts in sufficient detail to serve as the basis for progress payments during performance of the Work. Such prices will include an appropriate amount of overhead and profit applicable to each item of Work.

2.04 *Preconstruction Conference; Designation of Authorized Representatives*

A. Before any Work at the Site is started, a conference attended by Owner, Contractor, Engineer, and others as appropriate will be held to establish a working understanding among the parties as to the Work and to discuss the schedules referred to in Paragraph 2.03.A, procedures for handling Shop Drawings, Samples, and other submittals, processing Applications for Payment, electronic or digital transmittals, and maintaining required records.

B. At this conference Owner and Contractor each shall designate, in writing, a specific individual to act as its authorized representative with respect to the services and responsibilities under the Contract. Such individuals shall have the authority to transmit and receive information, render decisions relative to the Contract, and otherwise act on behalf of each respective party.

2.05 *Initial Acceptance of Schedules*

A. At least 10 days before submission of the first Application for Payment a conference, attended by Contractor, Engineer, and others as appropriate, will be held to review for acceptability to Engineer as provided below the schedules submitted in accordance with Paragraph 2.03.A. Contractor shall have an additional 10 days to make corrections and

adjustments and to complete and resubmit the schedules. No progress payment shall be made to Contractor until acceptable schedules are submitted to Engineer.

1. The Progress Schedule will be acceptable to Engineer if it provides an orderly progression of the Work to completion within the Contract Times. Such acceptance will not impose on Engineer responsibility for the Progress Schedule, for sequencing, scheduling, or progress of the Work, nor interfere with or relieve Contractor from Contractor's full responsibility therefor.
2. Contractor's Schedule of Submittals will be acceptable to Engineer if it provides a workable arrangement for reviewing and processing the required submittals.
3. Contractor's Schedule of Values will be acceptable to Engineer as to form and substance if it provides a reasonable allocation of the Contract Price to the component parts of the Work.

2.06 *Electronic Transmittals*

A. Except as otherwise stated elsewhere in the Contract, the Owner, Engineer, and Contractor may transmit, and shall accept, Project-related correspondence, text, data, documents, drawings, information, and graphics, including but not limited to Shop Drawings and other submittals, in electronic media or digital format, either directly, or through access to a secure Project website.

B. If the Contract does not establish protocols for electronic or digital transmittals, then Owner, Engineer, and Contractor shall jointly develop such protocols.

C. When transmitting items in electronic media or digital format, the transmitting party makes no representations as to long term compatibility, usability, or readability of the items resulting from the recipient's use of software application packages, operating systems, or computer hardware differing from those used in the drafting or transmittal of the items, or from those established in applicable transmittal protocols.

ARTICLE 3 – DOCUMENTS: INTENT, REQUIREMENTS, REUSE

3.01 *Intent*

A. The Contract Documents are complementary; what is required by one is as binding as if required by all.

B. It is the intent of the Contract Documents to describe a functionally complete project (or part thereof) to be constructed in accordance with the Contract Documents.

C. Unless otherwise stated in the Contract Documents, if there is a discrepancy between the electronic or digital versions of the Contract Documents (including any printed copies derived from such electronic or digital versions) and the printed record version, the printed record version shall govern.

D. The Contract supersedes prior negotiations, representations, and agreements, whether written or oral.

E. Engineer will issue clarifications and interpretations of the Contract Documents as provided herein.

3.02 *Reference Standards*

A. Standards Specifications, Codes, Laws and Regulations

1. Reference in the Contract Documents to standard specifications, manuals, reference standards, or codes of any technical society, organization, or association, or to Laws or Regulations, whether such reference be specific or by implication, shall mean the

standard specification, manual, reference standard, code, or Laws or Regulations in effect at the time of opening of Bids (or on the Effective Date of the Contract if there were no Bids), except as may be otherwise specifically stated in the Contract Documents.

2. No provision of any such standard specification, manual, reference standard, or code, or any instruction of a Supplier, shall be effective to change the duties or responsibilities of Owner, Contractor, or Engineer, or any of their subcontractors, consultants, agents, or employees, from those set forth in the part of the Contract Documents prepared by or for Engineer. No such provision or instruction shall be effective to assign to Owner, Engineer, or any of their officers, directors, members, partners, employees, agents, consultants, or subcontractors, any duty or authority to supervise or direct the performance of the Work or any duty or authority to undertake responsibility inconsistent with the provisions of the part of the Contract Documents prepared by or for Engineer.

3.03 *Reporting and Resolving Discrepancies*

A. *Reporting Discrepancies*:

1. *Contractor's Verification of Figures and Field Measurements*: Before undertaking each part of the Work, Contractor shall carefully study the Contract Documents, and check and verify pertinent figures and dimensions therein, particularly with respect to applicable field measurements. Contractor shall promptly report in writing to Engineer any conflict, error, ambiguity, or discrepancy that Contractor discovers, or has actual knowledge of, and shall not proceed with any Work affected thereby until the conflict, error, ambiguity, or discrepancy is resolved, by a clarification or interpretation by Engineer, or by an amendment or supplement to the Contract Documents issued pursuant to Paragraph 11.01.

2. *Contractor's Review of Contract Documents*: If, before or during the performance of the Work, Contractor discovers any conflict, error, ambiguity, or discrepancy within the Contract Documents, or between the Contract Documents and (a) any applicable Law or Regulation, (b) actual field conditions, (c) any standard specification, manual, reference standard, or code, or (d) any instruction of any Supplier, then Contractor shall promptly report it to Engineer in writing. Contractor shall not proceed with the Work affected thereby (except in an emergency as required by Paragraph 7.15) until the conflict, error, ambiguity, or discrepancy is resolved, by a clarification or interpretation by Engineer, or by an amendment or supplement to the Contract Documents issued pursuant to Paragraph 11.01.

3. Contractor shall not be liable to Owner or Engineer for failure to report any conflict, error, ambiguity, or discrepancy in the Contract Documents unless Contractor had actual knowledge thereof.

B. *Resolving Discrepancies*:

1. Except as may be otherwise specifically stated in the Contract Documents, the provisions of the part of the Contract Documents prepared by or for Engineer shall take precedence in resolving any conflict, error, ambiguity, or discrepancy between such provisions of the Contract Documents and:

a. the provisions of any standard specification, manual, reference standard, or code, or the instruction of any Supplier (whether or not specifically incorporated by reference as a Contract Document); or

b. the provisions of any Laws or Regulations applicable to the performance of the Work (unless such an interpretation of the provisions of the Contract Documents would result in violation of such Law or Regulation).

3.04 *Requirements of the Contract Documents*

A. During the performance of the Work and until final payment, Contractor and Owner shall submit to the Engineer all matters in question concerning the requirements of the Contract Documents (sometimes referred to as requests for information or interpretation—RFIs), or relating to the acceptability of the Work under the Contract Documents, as soon as possible after such matters arise. Engineer will be the initial interpreter of the requirements of the Contract Documents, and judge of the acceptability of the Work thereunder.

B. Engineer will, with reasonable promptness, render a written clarification, interpretation, or decision on the issue submitted, or initiate an amendment or supplement to the Contract Documents. Engineer's written clarification, interpretation, or decision will be final and binding on Contractor, unless it appeals by submitting a Change Proposal, and on Owner, unless it appeals by filing a Claim.

C. If a submitted matter in question concerns terms and conditions of the Contract Documents that do not involve (1) the performance or acceptability of the Work under the Contract Documents, (2) the design (as set forth in the Drawings, Specifications, or otherwise), or (3) other engineering or technical matters, then Engineer will promptly give written notice to Owner and Contractor that Engineer is unable to provide a decision or interpretation. If Owner and Contractor are unable to agree on resolution of such a matter in question, either party may pursue resolution as provided in Article 12.

3.05 *Reuse of Documents*

A. Contractor and its Subcontractors and Suppliers shall not:

1. have or acquire any title to or ownership rights in any of the Drawings, Specifications, or other documents (or copies of any thereof) prepared by or bearing the seal of Engineer or its consultants, including electronic media editions, or reuse any such Drawings, Specifications, other documents, or copies thereof on extensions of the Project or any other project without written consent of Owner and Engineer and specific written verification or adaptation by Engineer; or

2. have or acquire any title or ownership rights in any other Contract Documents, reuse any such Contract Documents for any purpose without Owner's express written consent, or violate any copyrights pertaining to such Contract Documents.

B. The prohibitions of this Paragraph 3.05 will survive final payment, or termination of the Contract. Nothing herein shall preclude Contractor from retaining copies of the Contract Documents for record purposes.

ARTICLE 4 – COMMENCEMENT AND PROGRESS OF THE WORK

4.01 *Commencement of Contract Times; Notice to Proceed*

A. The Contract Times will commence to run on the thirtieth day after the Effective Date of the Contract or, if a Notice to Proceed is given, on the day indicated in the Notice to Proceed. A Notice to Proceed may be given at any time within 30 days after the Effective Date of the Contract. In no event will the Contract Times commence to run later than the sixtieth day after the day of Bid opening or the thirtieth day after the Effective Date of the Contract, whichever date is earlier.

4.02 *Starting the Work*

A. Contractor shall start to perform the Work on the date when the Contract Times commence to run. No Work shall be done at the Site prior to such date.

4.03 *Reference Points*

A. Owner shall provide engineering surveys to establish reference points for construction which in Engineer's judgment are necessary to enable Contractor to proceed with the Work. Contractor shall be responsible for laying out the Work, shall protect and preserve the established reference points and property monuments, and shall make no changes or relocations without the prior written approval of Owner. Contractor shall report to Engineer whenever any reference point or property monument is lost or destroyed or requires relocation because of necessary changes in grades or locations, and shall be responsible for the accurate replacement or relocation of such reference points or property monuments by professionally qualified personnel.

4.04 *Progress Schedule*

A. Contractor shall adhere to the Progress Schedule established in accordance with Paragraph 2.05 as it may be adjusted from time to time as provided below.

1. Contractor shall submit to Engineer for acceptance (to the extent indicated in Paragraph 2.05) proposed adjustments in the Progress Schedule that will not result in changing the Contract Times.

2. Proposed adjustments in the Progress Schedule that will change the Contract Times shall be submitted in accordance with the requirements of Article 11.

B. Contractor shall carry on the Work and adhere to the Progress Schedule during all disputes or disagreements with Owner. No Work shall be delayed or postponed pending resolution of any disputes or disagreements, or during any appeal process, except as permitted by Paragraph 16.04, or as Owner and Contractor may otherwise agree in writing.

4.05 *Delays in Contractor's Progress*

A. If Owner, Engineer, or anyone for whom Owner is responsible, delays, disrupts, or interferes with the performance or progress of the Work, then Contractor shall be entitled to an equitable adjustment in the Contract Times and Contract Price. Contractor's entitlement to an adjustment of the Contract Times is conditioned on such adjustment being essential to Contractor's ability to complete the Work within the Contract Times.

B. Contractor shall not be entitled to an adjustment in Contract Price or Contract Times for delay, disruption, or interference caused by or within the control of Contractor. Delay, disruption, and interference attributable to and within the control of a Subcontractor or Supplier shall be deemed to be within the control of Contractor.

C. If Contractor's performance or progress is delayed, disrupted, or interfered with by unanticipated causes not the fault of and beyond the control of Owner, Contractor, and those for which they are responsible, then Contractor shall be entitled to an equitable adjustment in Contract Times. Contractor's entitlement to an adjustment of the Contract Times is conditioned on such adjustment being essential to Contractor's ability to complete the Work within the Contract Times. Such an adjustment shall be Contractor's sole and exclusive remedy for the delays, disruption, and interference described in this paragraph. Causes of delay, disruption, or interference that may give rise to an adjustment in Contract Times under this paragraph include but are not limited to the following:

1. severe and unavoidable natural catastrophes such as fires, floods, epidemics, and earthquakes;

2. abnormal weather conditions;

3. acts or failures to act of utility owners (other than those performing other work at or adjacent to the Site by arrangement with the Owner, as contemplated in Article 8); and

4. acts of war or terrorism.

D. Delays, disruption, and interference to the performance or progress of the Work resulting from the existence of a differing subsurface or physical condition, an Underground Facility that was not shown or indicated by the Contract Documents, or not shown or indicated with reasonable accuracy, and those resulting from Hazardous Environmental Conditions, are governed by Article 5.

E. Paragraph 8.03 governs delays, disruption, and interference to the performance or progress of the Work resulting from the performance of certain other work at or adjacent to the Site.

F. Contractor shall not be entitled to an adjustment in Contract Price or Contract Times for any delay, disruption, or interference if such delay is concurrent with a delay, disruption, or interference caused by or within the control of Contractor.

G. Contractor must submit any Change Proposal seeking an adjustment in Contract Price or Contract Times under this paragraph within 30 days of the commencement of the delaying, disrupting, or interfering event.

ARTICLE 5 – AVAILABILITY OF LANDS; SUBSURFACE AND PHYSICAL CONDITIONS; HAZARDOUS ENVIRONMENTAL CONDITIONS

5.01 *Availability of Lands*

A. Owner shall furnish the Site. Owner shall notify Contractor of any encumbrances or restrictions not of general application but specifically related to use of the Site with which Contractor must comply in performing the Work.

B. Upon reasonable written request, Owner shall furnish Contractor with a current statement of record legal title and legal description of the lands upon which permanent improvements are to be made and Owner's interest therein as necessary for giving notice of or filing a mechanic's or construction lien against such lands in accordance with applicable Laws and Regulations.

C. Contractor shall provide for all additional lands and access thereto that may be required for temporary construction facilities or storage of materials and equipment.

5.02 *Use of Site and Other Areas*

A. *Limitation on Use of Site and Other Areas*:

1. Contractor shall confine construction equipment, temporary construction facilities, the storage of materials and equipment, and the operations of workers to the Site, adjacent areas that Contractor has arranged to use through construction easements or otherwise, and other adjacent areas permitted by Laws and Regulations, and shall not unreasonably encumber the Site and such other adjacent areas with construction equipment or other materials or equipment. Contractor shall assume full responsibility for (a) damage to the Site; (b) damage to any such other adjacent areas used for Contractor's operations; (c) damage to any other adjacent land or areas; and (d) for injuries and losses sustained by the owners or occupants of any such land or areas; provided that such damage or injuries result from the performance of the Work or from other actions or conduct of the Contractor or those for which Contractor is responsible.

2. If a damage or injury claim is made by the owner or occupant of any such land or area because of the performance of the Work, or because of other actions or conduct of the Contractor or those for which Contractor is responsible, Contractor shall (a) take immediate corrective or remedial action as required by Paragraph 7.12, or otherwise; (b) promptly attempt to settle the claim as to all parties through negotiations with such owner or occupant, or otherwise resolve the claim by arbitration or other dispute resolution proceeding, or at law; and (c) to the fullest extent permitted by Laws and Regulations, indemnify and hold harmless Owner and Engineer, and the officers,

directors, members, partners, employees, agents, consultants and subcontractors of each and any of them from and against any such claim, and against all costs, losses, and damages (including but not limited to all fees and charges of engineers, architects, attorneys, and other professionals and all court or arbitration or other dispute resolution costs) arising out of or relating to any claim or action, legal or equitable, brought by any such owner or occupant against Owner, Engineer, or any other party indemnified hereunder to the extent caused directly or indirectly, in whole or in part by, or based upon, Contractor's performance of the Work, or because of other actions or conduct of the Contractor or those for which Contractor is responsible.

B. *Removal of Debris During Performance of the Work*: During the progress of the Work the Contractor shall keep the Site and other adjacent areas free from accumulations of waste materials, rubbish, and other debris. Removal and disposal of such waste materials, rubbish, and other debris shall conform to applicable Laws and Regulations.

C. *Cleaning*: Prior to Substantial Completion of the Work Contractor shall clean the Site and the Work and make it ready for utilization by Owner. At the completion of the Work Contractor shall remove from the Site and adjacent areas all tools, appliances, construction equipment and machinery, and surplus materials and shall restore to original condition all property not designated for alteration by the Contract Documents.

D. *Loading of Structures*: Contractor shall not load nor permit any part of any structure to be loaded in any manner that will endanger the structure, nor shall Contractor subject any part of the Work or adjacent structures or land to stresses or pressures that will endanger them.

5.03 *Subsurface and Physical Conditions*

A. *Reports and Drawings*: The Supplementary Conditions identify:

1. those reports known to Owner of explorations and tests of subsurface conditions at or adjacent to the Site;

2. those drawings known to Owner of physical conditions relating to existing surface or subsurface structures at the Site (except Underground Facilities); and

3. Technical Data contained in such reports and drawings.

B. *Reliance by Contractor on Technical Data Authorized*: Contractor may rely upon the accuracy of the Technical Data expressly identified in the Supplementary Conditions with respect to such reports and drawings, but such reports and drawings are not Contract Documents. If no such express identification has been made, then Contractor may rely upon the accuracy of the Technical Data (as defined in Article 1) contained in any geotechnical or environmental report prepared for the Project and made available to Contractor. Except for such reliance on Technical Data, Contractor may not rely upon or make any claim against Owner or Engineer, or any of their officers, directors, members, partners, employees, agents, consultants, or subcontractors, with respect to:

1. the completeness of such reports and drawings for Contractor's purposes, including, but not limited to, any aspects of the means, methods, techniques, sequences, and procedures of construction to be employed by Contractor, and safety precautions and programs incident thereto; or

2. other data, interpretations, opinions, and information contained in such reports or shown or indicated in such drawings; or

3. any Contractor interpretation of or conclusion drawn from any Technical Data or any such other data, interpretations, opinions, or information.

5.04 *Differing Subsurface or Physical Conditions*

A. *Notice by Contractor*: If Contractor believes that any subsurface or physical condition that is uncovered or revealed at the Site either:

1. is of such a nature as to establish that any Technical Data on which Contractor is entitled to rely as provided in Paragraph 5.03 is materially inaccurate; or

2. is of such a nature as to require a change in the Drawings or Specifications; or

3. differs materially from that shown or indicated in the Contract Documents; or

4. is of an unusual nature, and differs materially from conditions ordinarily encountered and generally recognized as inherent in work of the character provided for in the Contract Documents;

then Contractor shall, promptly after becoming aware thereof and before further disturbing the subsurface or physical conditions or performing any Work in connection therewith (except in an emergency as required by Paragraph 7.15), notify Owner and Engineer in writing about such condition. Contractor shall not further disturb such condition or perform any Work in connection therewith (except with respect to an emergency) until receipt of a written statement permitting Contractor to do so.

B. *Engineer's Review*: After receipt of written notice as required by the preceding paragraph, Engineer will promptly review the subsurface or physical condition in question; determine the necessity of Owner's obtaining additional exploration or tests with respect to the condition; conclude whether the condition falls within any one or more of the differing site condition categories in Paragraph 5.04.A above; obtain any pertinent cost or schedule information from Contractor; prepare recommendations to Owner regarding the Contractor's resumption of Work in connection with the subsurface or physical condition in question and the need for any change in the Drawings or Specifications; and advise Owner in writing of Engineer's findings, conclusions, and recommendations.

C. *Owner's Statement to Contractor Regarding Site Condition*: After receipt of Engineer's written findings, conclusions, and recommendations, Owner shall issue a written statement to Contractor (with a copy to Engineer) regarding the subsurface or physical condition in question, addressing the resumption of Work in connection with such condition, indicating whether any change in the Drawings or Specifications will be made, and adopting or rejecting Engineer's written findings, conclusions, and recommendations, in whole or in part.

D. *Possible Price and Times Adjustments*:

1. Contractor shall be entitled to an equitable adjustment in Contract Price or Contract Times, or both, to the extent that the existence of a differing subsurface or physical condition, or any related delay, disruption, or interference, causes an increase or decrease in Contractor's cost of, or time required for, performance of the Work; subject, however, to the following:

a. such condition must fall within any one or more of the categories described in Paragraph 5.04.A;

b. with respect to Work that is paid for on a unit price basis, any adjustment in Contract Price will be subject to the provisions of Paragraph 13.03; and,

c. Contractor's entitlement to an adjustment of the Contract Times is conditioned on such adjustment being essential to Contractor's ability to complete the Work within the Contract Times.

2. Contractor shall not be entitled to any adjustment in the Contract Price or Contract Times with respect to a subsurface or physical condition if:

    a. Contractor knew of the existence of such condition at the time Contractor made a commitment to Owner with respect to Contract Price and Contract Times by the submission of a Bid or becoming bound under a negotiated contract, or otherwise; or

    b. the existence of such condition reasonably could have been discovered or revealed as a result of any examination, investigation, exploration, test, or study of the Site and contiguous areas expressly required by the Bidding Requirements or Contract Documents to be conducted by or for Contractor prior to Contractor's making such commitment; or

    c. Contractor failed to give the written notice as required by Paragraph 5.04.A.

3. If Owner and Contractor agree regarding Contractor's entitlement to and the amount or extent of any adjustment in the Contract Price or Contract Times, or both, then any such adjustment shall be set forth in a Change Order.

4. Contractor may submit a Change Proposal regarding its entitlement to or the amount or extent of any adjustment in the Contract Price or Contract Times, or both, no later than 30 days after Owner's issuance of the Owner's written statement to Contractor regarding the subsurface or physical condition in question.

5.05 *Underground Facilities*

A. *Contractor's Responsibilities*: The information and data shown or indicated in the Contract Documents with respect to existing Underground Facilities at or adjacent to the Site is based on information and data furnished to Owner or Engineer by the owners of such Underground Facilities, including Owner, or by others. Unless it is otherwise expressly provided in the Supplementary Conditions:

    1. Owner and Engineer do not warrant or guarantee the accuracy or completeness of any such information or data provided by others; and

    2. the cost of all of the following will be included in the Contract Price, and Contractor shall have full responsibility for:

        a. reviewing and checking all information and data regarding existing Underground Facilities at the Site;

        b. locating all Underground Facilities shown or indicated in the Contract Documents as being at the Site;

        c. coordination of the Work with the owners (including Owner) of such Underground Facilities, during construction; and

        d. the safety and protection of all existing Underground Facilities at the Site, and repairing any damage thereto resulting from the Work.

B. *Notice by Contractor*: If Contractor believes that an Underground Facility that is uncovered or revealed at the Site was not shown or indicated in the Contract Documents, or was not shown or indicated with reasonable accuracy, then Contractor shall, promptly after becoming aware thereof and before further disturbing conditions affected thereby or performing any Work in connection therewith (except in an emergency as required by Paragraph 7.15), identify the owner of such Underground Facility and give written notice to that owner and to Owner and Engineer.

C. *Engineer's Review*: Engineer will promptly review the Underground Facility and conclude whether such Underground Facility was not shown or indicated in the Contract Documents,

or was not shown or indicated with reasonable accuracy; obtain any pertinent cost or schedule information from Contractor; prepare recommendations to Owner regarding the Contractor's resumption of Work in connection with the Underground Facility in question; determine the extent, if any, to which a change is required in the Drawings or Specifications to reflect and document the consequences of the existence or location of the Underground Facility; and advise Owner in writing of Engineer's findings, conclusions, and recommendations. During such time, Contractor shall be responsible for the safety and protection of such Underground Facility.

D. *Owner's Statement to Contractor Regarding Underground Facility*: After receipt of Engineer's written findings, conclusions, and recommendations, Owner shall issue a written statement to Contractor (with a copy to Engineer) regarding the Underground Facility in question, addressing the resumption of Work in connection with such Underground Facility, indicating whether any change in the Drawings or Specifications will be made, and adopting or rejecting Engineer's written findings, conclusions, and recommendations in whole or in part.

E. *Possible Price and Times Adjustments*:

1. Contractor shall be entitled to an equitable adjustment in the Contract Price or Contract Times, or both, to the extent that any existing Underground Facility at the Site that was not shown or indicated in the Contract Documents, or was not shown or indicated with reasonable accuracy, or any related delay, disruption, or interference, causes an increase or decrease in Contractor's cost of, or time required for, performance of the Work; subject, however, to the following:

a. Contractor did not know of and could not reasonably have been expected to be aware of or to have anticipated the existence or actual location of the Underground Facility in question;

b. With respect to Work that is paid for on a unit price basis, any adjustment in Contract Price will be subject to the provisions of Paragraph 13.03;

c. Contractor's entitlement to an adjustment of the Contract Times is conditioned on such adjustment being essential to Contractor's ability to complete the Work within the Contract Times; and

d. Contractor gave the notice required in Paragraph 5.05.B.

2. If Owner and Contractor agree regarding Contractor's entitlement to and the amount or extent of any adjustment in the Contract Price or Contract Times, or both, then any such adjustment shall be set forth in a Change Order.

3. Contractor may submit a Change Proposal regarding its entitlement to or the amount or extent of any adjustment in the Contract Price or Contract Times, or both, no later than 30 days after Owner's issuance of the Owner's written statement to Contractor regarding the Underground Facility in question.

5.06 *Hazardous Environmental Conditions at Site*

A. *Reports and Drawings*: The Supplementary Conditions identify:

1. those reports and drawings known to Owner relating to Hazardous Environmental Conditions that have been identified at or adjacent to the Site; and

2. Technical Data contained in such reports and drawings.

B. *Reliance by Contractor on Technical Data Authorized*: Contractor may rely upon the accuracy of the Technical Data expressly identified in the Supplementary Conditions with respect to such reports and drawings, but such reports and drawings are not Contract Documents. If no such express identification has been made, then Contractor may rely on the

accuracy of the Technical Data (as defined in Article 1) contained in any geotechnical or environmental report prepared for the Project and made available to Contractor. Except for such reliance on Technical Data, Contractor may not rely upon or make any claim against Owner or Engineer, or any of their officers, directors, members, partners, employees, agents, consultants, or subcontractors with respect to:

1. the completeness of such reports and drawings for Contractor's purposes, including, but not limited to, any aspects of the means, methods, techniques, sequences and procedures of construction to be employed by Contractor and safety precautions and programs incident thereto; or
2. other data, interpretations, opinions and information contained in such reports or shown or indicated in such drawings; or
3. any Contractor interpretation of or conclusion drawn from any Technical Data or any such other data, interpretations, opinions or information.

C. Contractor shall not be responsible for removing or remediating any Hazardous Environmental Condition encountered, uncovered, or revealed at the Site unless such removal or remediation is expressly identified in the Contract Documents to be within the scope of the Work.

D. Contractor shall be responsible for controlling, containing, and duly removing all Constituents of Concern brought to the Site by Contractor, Subcontractors, Suppliers, or anyone else for whom Contractor is responsible, and for any associated costs; and for the costs of removing and remediating any Hazardous Environmental Condition created by the presence of any such Constituents of Concern.

E. If Contractor encounters, uncovers, or reveals a Hazardous Environmental Condition whose removal or remediation is not expressly identified in the Contract Documents as being within the scope of the Work, or if Contractor or anyone for whom Contractor is responsible creates a Hazardous Environmental Condition, then Contractor shall immediately: (1) secure or otherwise isolate such condition; (2) stop all Work in connection with such condition and in any area affected thereby (except in an emergency as required by Paragraph 7.15); and (3) notify Owner and Engineer (and promptly thereafter confirm such notice in writing). Owner shall promptly consult with Engineer concerning the necessity for Owner to retain a qualified expert to evaluate such condition or take corrective action, if any. Promptly after consulting with Engineer, Owner shall take such actions as are necessary to permit Owner to timely obtain required permits and provide Contractor the written notice required by Paragraph 5.06.F. If Contractor or anyone for whom Contractor is responsible created the Hazardous Environmental Condition in question, then Owner may remove and remediate the Hazardous Environmental Condition, and impose a set-off against payments to account for the associated costs.

F. Contractor shall not resume Work in connection with such Hazardous Environmental Condition or in any affected area until after Owner has obtained any required permits related thereto, and delivered written notice to Contractor either (1) specifying that such condition and any affected area is or has been rendered safe for the resumption of Work, or (2) specifying any special conditions under which such Work may be resumed safely.

G. If Owner and Contractor cannot agree as to entitlement to or on the amount or extent, if any, of any adjustment in Contract Price or Contract Times, or both, as a result of such Work stoppage or such special conditions under which Work is agreed to be resumed by Contractor, then within 30 days of Owner's written notice regarding the resumption of Work, Contractor may submit a Change Proposal, or Owner may impose a set-off.

H. If after receipt of such written notice Contractor does not agree to resume such Work based on a reasonable belief it is unsafe, or does not agree to resume such Work under such special

conditions, then Owner may order the portion of the Work that is in the area affected by such condition to be deleted from the Work, following the contractual change procedures in Article 11. Owner may have such deleted portion of the Work performed by Owner's own forces or others in accordance with Article 8.

I. To the fullest extent permitted by Laws and Regulations, Owner shall indemnify and hold harmless Contractor, Subcontractors, and Engineer, and the officers, directors, members, partners, employees, agents, consultants, and subcontractors of each and any of them from and against all claims, costs, losses, and damages (including but not limited to all fees and charges of engineers, architects, attorneys, and other professionals and all court or arbitration or other dispute resolution costs) arising out of or relating to a Hazardous Environmental Condition, provided that such Hazardous Environmental Condition (1) was not shown or indicated in the Drawings, Specifications, or other Contract Documents, identified as Technical Data entitled to limited reliance pursuant to Paragraph 5.06.B, or identified in the Contract Documents to be included within the scope of the Work, and (2) was not created by Contractor or by anyone for whom Contractor is responsible. Nothing in this Paragraph 5.06.H shall obligate Owner to indemnify any individual or entity from and against the consequences of that individual's or entity's own negligence.

J. To the fullest extent permitted by Laws and Regulations, Contractor shall indemnify and hold harmless Owner and Engineer, and the officers, directors, members, partners, employees, agents, consultants, and subcontractors of each and any of them from and against all claims, costs, losses, and damages (including but not limited to all fees and charges of engineers, architects, attorneys, and other professionals and all court or arbitration or other dispute resolution costs) arising out of or relating to the failure to control, contain, or remove a Constituent of Concern brought to the Site by Contractor or by anyone for whom Contractor is responsible, or to a Hazardous Environmental Condition created by Contractor or by anyone for whom Contractor is responsible. Nothing in this Paragraph 5.06.J shall obligate Contractor to indemnify any individual or entity from and against the consequences of that individual's or entity's own negligence.

K. The provisions of Paragraphs 5.03, 5.04, and 5.05 do not apply to the presence of Constituents of Concern or to a Hazardous Environmental Condition uncovered or revealed at the Site.

ARTICLE 6 – BONDS AND INSURANCE

6.01 *Performance, Payment, and Other Bonds*

A. Contractor shall furnish a performance bond and a payment bond, each in an amount at least equal to the Contract Price, as security for the faithful performance and payment of all of Contractor's obligations under the Contract. These bonds shall remain in effect until one year after the date when final payment becomes due or until completion of the correction period specified in Paragraph 15.08, whichever is later, except as provided otherwise by Laws or Regulations, the Supplementary Conditions, or other specific provisions of the Contract. Contractor shall also furnish such other bonds as are required by the Supplementary Conditions or other specific provisions of the Contract.

B. All bonds shall be in the form prescribed by the Contract except as provided otherwise by Laws or Regulations, and shall be executed by such sureties as are named in "Companies Holding Certificates of Authority as Acceptable Sureties on Federal Bonds and as Acceptable Reinsuring Companies" as published in Circular 570 (as amended and supplemented) by the Financial Management Service, Surety Bond Branch, U.S. Department of the Treasury. A bond signed by an agent or attorney-in-fact must be accompanied by a certified copy of that individual's authority to bind the surety. The evidence of authority

shall show that it is effective on the date the agent or attorney-in-fact signed the accompanying bond.

C. Contractor shall obtain the required bonds from surety companies that are duly licensed or authorized in the jurisdiction in which the Project is located to issue bonds in the required amounts.

D. If the surety on a bond furnished by Contractor is declared bankrupt or becomes insolvent, or its right to do business is terminated in any state or jurisdiction where any part of the Project is located, or the surety ceases to meet the requirements above, then Contractor shall promptly notify Owner and Engineer and shall, within 20 days after the event giving rise to such notification, provide another bond and surety, both of which shall comply with the bond and surety requirements above.

E. If Contractor has failed to obtain a required bond, Owner may exclude the Contractor from the Site and exercise Owner's termination rights under Article 16.

F. Upon request, Owner shall provide a copy of the payment bond to any Subcontractor, Supplier, or other person or entity claiming to have furnished labor or materials used in the performance of the Work.

6.02 *Insurance—General Provisions*

A. Owner and Contractor shall obtain and maintain insurance as required in this Article and in the Supplementary Conditions.

B. All insurance required by the Contract to be purchased and maintained by Owner or Contractor shall be obtained from insurance companies that are duly licensed or authorized, in the state or jurisdiction in which the Project is located, to issue insurance policies for the required limits and coverages. Unless a different standard is indicated in the Supplementary Conditions, all companies that provide insurance policies required under this Contract shall have an A.M. Best rating of A-VII or better.

C. Contractor shall deliver to Owner, with copies to each named insured and additional insured (as identified in this Article, in the Supplementary Conditions, or elsewhere in the Contract), certificates of insurance establishing that Contractor has obtained and is maintaining the policies, coverages, and endorsements required by the Contract. Upon request by Owner or any other insured, Contractor shall also furnish other evidence of such required insurance, including but not limited to copies of policies and endorsements, and documentation of applicable self-insured retentions and deductibles. Contractor may block out (redact) any confidential premium or pricing information contained in any policy or endorsement furnished under this provision.

D. Owner shall deliver to Contractor, with copies to each named insured and additional insured (as identified in this Article, the Supplementary Conditions, or elsewhere in the Contract), certificates of insurance establishing that Owner has obtained and is maintaining the policies, coverages, and endorsements required of Owner by the Contract (if any). Upon request by Contractor or any other insured, Owner shall also provide other evidence of such required insurance (if any), including but not limited to copies of policies and endorsements, and documentation of applicable self-insured retentions and deductibles. Owner may block out (redact) any confidential premium or pricing information contained in any policy or endorsement furnished under this provision.

E. Failure of Owner or Contractor to demand such certificates or other evidence of the other party's full compliance with these insurance requirements, or failure of Owner or Contractor to identify a deficiency in compliance from the evidence provided, shall not be construed as a waiver of the other party's obligation to obtain and maintain such insurance.

F. If either party does not purchase or maintain all of the insurance required of such party by the Contract, such party shall notify the other party in writing of such failure to purchase prior to the start of the Work, or of such failure to maintain prior to any change in the required coverage.

G. If Contractor has failed to obtain and maintain required insurance, Owner may exclude the Contractor from the Site, impose an appropriate set-off against payment, and exercise Owner's termination rights under Article 16.

H. Without prejudice to any other right or remedy, if a party has failed to obtain required insurance, the other party may elect to obtain equivalent insurance to protect such other party's interests at the expense of the party who was required to provide such coverage, and the Contract Price shall be adjusted accordingly.

I. Owner does not represent that insurance coverage and limits established in this Contract necessarily will be adequate to protect Contractor or Contractor's interests.

J. The insurance and insurance limits required herein shall not be deemed as a limitation on Contractor's liability under the indemnities granted to Owner and other individuals and entities in the Contract.

6.03 *Contractor's Insurance*

A. *Workers' Compensation*: Contractor shall purchase and maintain workers' compensation and employer's liability insurance for:

1. claims under workers' compensation, disability benefits, and other similar employee benefit acts.

2. United States Longshoreman and Harbor Workers' Compensation Act and Jones Act coverage (if applicable).

3. claims for damages because of bodily injury, occupational sickness or disease, or death of Contractor's employees (by stop-gap endorsement in monopolist worker's compensation states).

4. Foreign voluntary worker compensation (if applicable).

B. *Commercial General Liability—Claims Covered*: Contractor shall purchase and maintain commercial general liability insurance, covering all operations by or on behalf of Contractor, on an occurrence basis, against:

1. claims for damages because of bodily injury, sickness or disease, or death of any person other than Contractor's employees.

2. claims for damages insured by reasonably available personal injury liability coverage.

3. claims for damages, other than to the Work itself, because of injury to or destruction of tangible property wherever located, including loss of use resulting therefrom.

C. *Commercial General Liability—Form and Content*: Contractor's commercial liability policy shall be written on a 1996 (or later) ISO commercial general liability form (occurrence form) and include the following coverages and endorsements:

1. Products and completed operations coverage:

a. Such insurance shall be maintained for three years after final payment.

b. Contractor shall furnish Owner and each other additional insured (as identified in the Supplementary Conditions or elsewhere in the Contract) evidence of continuation of such insurance at final payment and three years thereafter.

2. Blanket contractual liability coverage, to the extent permitted by law, including but not limited to coverage of Contractor's contractual indemnity obligations in Paragraph 7.18.

3. Broad form property damage coverage.

4. Severability of interest.

5. Underground, explosion, and collapse coverage.

6. Personal injury coverage.

7. Additional insured endorsements that include both ongoing operations and products and completed operations coverage through ISO Endorsements CG 20 10 10 01 and CG 20 37 10 01 (together); or CG 20 10 07 04 and CG 20 37 07 04 (together); or their equivalent.

8. For design professional additional insureds, ISO Endorsement CG 20 32 07 04, "Additional Insured—Engineers, Architects or Surveyors Not Engaged by the Named Insured" or its equivalent.

D. *Automobile liability*: Contractor shall purchase and maintain automobile liability insurance against claims for damages because of bodily injury or death of any person or property damage arising out of the ownership, maintenance, or use of any motor vehicle. The automobile liability policy shall be written on an occurrence basis.

E. *Umbrella or excess liability*: Contractor shall purchase and maintain umbrella or excess liability insurance written over the underlying employer's liability, commercial general liability, and automobile liability insurance described in the paragraphs above. Subject to industry-standard exclusions, the coverage afforded shall follow form as to each and every one of the underlying policies.

F. *Contractor's pollution liability insurance*: Contractor shall purchase and maintain a policy covering third-party injury and property damage claims, including clean-up costs, as a result of pollution conditions arising from Contractor's operations and completed operations. This insurance shall be maintained for no less than three years after final completion.

G. *Additional insureds*: The Contractor's commercial general liability, automobile liability, umbrella or excess, and pollution liability policies shall include and list as additional insureds Owner and Engineer, and any individuals or entities identified in the Supplementary Conditions; include coverage for the respective officers, directors, members, partners, employees, agents, consultants, and subcontractors of each and any of all such additional insureds; and the insurance afforded to these additional insureds shall provide primary coverage for all claims covered thereby (including as applicable those arising from both ongoing and completed operations) on a non-contributory basis. Contractor shall obtain all necessary endorsements to support these requirements.

H. *Contractor's professional liability insurance*: If Contractor will provide or furnish professional services under this Contract, through a delegation of professional design services or otherwise, then Contractor shall be responsible for purchasing and maintaining applicable professional liability insurance. This insurance shall provide protection against claims arising out of performance of professional design or related services, and caused by a negligent error, omission, or act for which the insured party is legally liable. It shall be maintained throughout the duration of the Contract and for a minimum of two years after Substantial Completion. If such professional design services are performed by a Subcontractor, and not by Contractor itself, then the requirements of this paragraph may be satisfied through the purchasing and maintenance of such insurance by such Subcontractor.

I. *General provisions*: The policies of insurance required by this Paragraph 6.03 shall:

1. include at least the specific coverages provided in this Article.

2. be written for not less than the limits of liability provided in this Article and in the Supplementary Conditions, or required by Laws or Regulations, whichever is greater.

3. contain a provision or endorsement that the coverage afforded will not be canceled, materially changed, or renewal refused until at least 10 days prior written notice has been given to Contractor. Within three days of receipt of any such written notice, Contractor shall provide a copy of the notice to Owner, Engineer, and each other insured under the policy.

4. remain in effect at least until final payment (and longer if expressly required in this Article) and at all times thereafter when Contractor may be correcting, removing, or replacing defective Work as a warranty or correction obligation, or otherwise, or returning to the Site to conduct other tasks arising from the Contract Documents.

5. be appropriate for the Work being performed and provide protection from claims that may arise out of or result from Contractor's performance of the Work and Contractor's other obligations under the Contract Documents, whether it is to be performed by Contractor, any Subcontractor or Supplier, or by anyone directly or indirectly employed by any of them to perform any of the Work, or by anyone for whose acts any of them may be liable.

J. The coverage requirements for specific policies of insurance must be met by such policies, and not by reference to excess or umbrella insurance provided in other policies.

6.04 *Owner's Liability Insurance*

A. In addition to the insurance required to be provided by Contractor under Paragraph 6.03, Owner, at Owner's option, may purchase and maintain at Owner's expense Owner's own liability insurance as will protect Owner against claims which may arise from operations under the Contract Documents.

B. Owner's liability policies, if any, operate separately and independently from policies required to be provided by Contractor, and Contractor cannot rely upon Owner's liability policies for any of Contractor's obligations to the Owner, Engineer, or third parties.

6.05 *Property Insurance*

A. *Builder's Risk*: Unless otherwise provided in the Supplementary Conditions, Contractor shall purchase and maintain builder's risk insurance upon the Work on a completed value basis, in the amount of the full insurable replacement cost thereof (subject to such deductible amounts as may be provided in the Supplementary Conditions or required by Laws and Regulations). This insurance shall:

1. include the Owner and Contractor as named insureds, and all Subcontractors, and any individuals or entities required by the Supplementary Conditions to be insured under such builder's risk policy, as insureds or named insureds. For purposes of the remainder of this Paragraph 6.05, Paragraphs 6.06 and 6.07, and any corresponding Supplementary Conditions, the parties required to be insured shall collectively be referred to as "insureds."

2. be written on a builder's risk "all risk" policy form that shall at least include insurance for physical loss or damage to the Work, temporary buildings, falsework, and materials and equipment in transit, and shall insure against at least the following perils or causes of loss: fire; lightning; windstorm; riot; civil commotion; terrorism; vehicle impact; aircraft; smoke; theft; vandalism and malicious mischief; mechanical breakdown, boiler explosion, and artificially generated electric current; earthquake; volcanic activity, and other earth movement; flood; collapse; explosion; debris removal; demolition occasioned by enforcement of Laws and Regulations; water damage (other than that caused by flood); and such other perils or causes of loss as may be specifically required

by the Supplementary Conditions. If insurance against mechanical breakdown, boiler explosion, and artificially generated electric current; earthquake; volcanic activity, and other earth movement; or flood, are not commercially available under builder's risk policies, by endorsement or otherwise, such insurance may be provided through other insurance policies acceptable to Owner and Contractor.

3. cover, as insured property, at least the following: (a) the Work and all materials, supplies, machinery, apparatus, equipment, fixtures, and other property of a similar nature that are to be incorporated into or used in the preparation, fabrication, construction, erection, or completion of the Work, including Owner-furnished or assigned property; (b) spare parts inventory required within the scope of the Contract; and (c) temporary works which are not intended to form part of the permanent constructed Work but which are intended to provide working access to the Site, or to the Work under construction, or which are intended to provide temporary support for the Work under construction, including scaffolding, form work, fences, shoring, falsework, and temporary structures.
4. cover expenses incurred in the repair or replacement of any insured property (including but not limited to fees and charges of engineers and architects).
5. extend to cover damage or loss to insured property while in temporary storage at the Site or in a storage location outside the Site (but not including property stored at the premises of a manufacturer or Supplier).
6. extend to cover damage or loss to insured property while in transit.
7. allow for partial occupation or use of the Work by Owner, such that those portions of the Work that are not yet occupied or used by Owner shall remain covered by the builder's risk insurance.
8. allow for the waiver of the insurer's subrogation rights, as set forth below.
9. provide primary coverage for all losses and damages caused by the perils or causes of loss covered.
10. not include a co-insurance clause.
11. include an exception for ensuing losses from physical damage or loss with respect to any defective workmanship, design, or materials exclusions.
12. include performance/hot testing and start-up.
13. be maintained in effect, subject to the provisions herein regarding Substantial Completion and partial occupancy or use of the Work by Owner, until the Work is complete.

B. *Notice of Cancellation or Change*: All the policies of insurance (and the certificates or other evidence thereof) required to be purchased and maintained in accordance with this Paragraph 6.05 will contain a provision or endorsement that the coverage afforded will not be canceled or materially changed or renewal refused until at least 10 days prior written notice has been given to the purchasing policyholder. Within three days of receipt of any such written notice, the purchasing policyholder shall provide a copy of the notice to each other insured.

C. *Deductibles*: The purchaser of any required builder's risk or property insurance shall pay for costs not covered because of the application of a policy deductible.

D. *Partial Occupancy or Use by Owner*: If Owner will occupy or use a portion or portions of the Work prior to Substantial Completion of all the Work as provided in Paragraph 15.04, then Owner (directly, if it is the purchaser of the builder's risk policy, or through Contractor) will provide notice of such occupancy or use to the builder's risk insurer. The builder's risk insurance shall not be canceled or permitted to lapse on account of any such partial use or

occupancy; rather, those portions of the Work that are occupied or used by Owner may come off the builder's risk policy, while those portions of the Work not yet occupied or used by Owner shall remain covered by the builder's risk insurance.

E. *Additional Insurance*: If Contractor elects to obtain other special insurance to be included in or supplement the builder's risk or property insurance policies provided under this Paragraph 6.05, it may do so at Contractor's expense.

F. *Insurance of Other Property*: If the express insurance provisions of the Contract do not require or address the insurance of a property item or interest, such as tools, construction equipment, or other personal property owned by Contractor, a Subcontractor, or an employee of Contractor or a Subcontractor, then the entity or individual owning such property item will be responsible for deciding whether to insure it, and if so in what amount.

6.06 *Waiver of Rights*

A. All policies purchased in accordance with Paragraph 6.05, expressly including the builder's risk policy, shall contain provisions to the effect that in the event of payment of any loss or damage the insurers will have no rights of recovery against any insureds thereunder, or against Engineer or its consultants, or their officers, directors, members, partners, employees, agents, consultants, or subcontractors. Owner and Contractor waive all rights against each other and the respective officers, directors, members, partners, employees, agents, consultants, and subcontractors of each and any of them, for all losses and damages caused by, arising out of, or resulting from any of the perils or causes of loss covered by such policies and any other property insurance applicable to the Work; and, in addition, waive all such rights against Engineer, its consultants, all Subcontractors, all individuals or entities identified in the Supplementary Conditions as insureds, and the officers, directors, members, partners, employees, agents, consultants, and subcontractors of each and any of them, under such policies for losses and damages so caused. None of the above waivers shall extend to the rights that any party making such waiver may have to the proceeds of insurance held by Owner or Contractor as trustee or fiduciary, or otherwise payable under any policy so issued.

B. Owner waives all rights against Contractor, Subcontractors, and Engineer, and the officers, directors, members, partners, employees, agents, consultants and subcontractors of each and any of them, for:

1. loss due to business interruption, loss of use, or other consequential loss extending beyond direct physical loss or damage to Owner's property or the Work caused by, arising out of, or resulting from fire or other perils whether or not insured by Owner; and

2. loss or damage to the completed Project or part thereof caused by, arising out of, or resulting from fire or other insured peril or cause of loss covered by any property insurance maintained on the completed Project or part thereof by Owner during partial occupancy or use pursuant to Paragraph 15.04, after Substantial Completion pursuant to Paragraph 15.03, or after final payment pursuant to Paragraph 15.06.

C. Any insurance policy maintained by Owner covering any loss, damage or consequential loss referred to in Paragraph 6.06.B shall contain provisions to the effect that in the event of payment of any such loss, damage, or consequential loss, the insurers will have no rights of recovery against Contractor, Subcontractors, or Engineer, or the officers, directors, members, partners, employees, agents, consultants, or subcontractors of each and any of them.

D. Contractor shall be responsible for assuring that the agreement under which a Subcontractor performs a portion of the Work contains provisions whereby the Subcontractor waives all rights against Owner, Contractor, all individuals or entities identified in the Supplementary

Conditions as insureds, the Engineer and its consultants, and the officers, directors, members, partners, employees, agents, consultants, and subcontractors of each and any of them, for all losses and damages caused by, arising out of, relating to, or resulting from any of the perils or causes of loss covered by builder's risk insurance and any other property insurance applicable to the Work.

6.07 *Receipt and Application of Property Insurance Proceeds*

A. Any insured loss under the builder's risk and other policies of insurance required by Paragraph 6.05 will be adjusted and settled with the named insured that purchased the policy. Such named insured shall act as fiduciary for the other insureds, and give notice to such other insureds that adjustment and settlement of a claim is in progress. Any other insured may state its position regarding a claim for insured loss in writing within 15 days after notice of such claim.

B. Proceeds for such insured losses may be made payable by the insurer either jointly to multiple insureds, or to the named insured that purchased the policy in its own right and as fiduciary for other insureds, subject to the requirements of any applicable mortgage clause. A named insured receiving insurance proceeds under the builder's risk and other policies of insurance required by Paragraph 6.05 shall distribute such proceeds in accordance with such agreement as the parties in interest may reach, or as otherwise required under the dispute resolution provisions of this Contract or applicable Laws and Regulations.

C. If no other special agreement is reached, the damaged Work shall be repaired or replaced, the money so received applied on account thereof, and the Work and the cost thereof covered by Change Order, if needed.

ARTICLE 7 – CONTRACTOR'S RESPONSIBILITIES

7.01 *Supervision and Superintendence*

A. Contractor shall supervise, inspect, and direct the Work competently and efficiently, devoting such attention thereto and applying such skills and expertise as may be necessary to perform the Work in accordance with the Contract Documents. Contractor shall be solely responsible for the means, methods, techniques, sequences, and procedures of construction.

B. At all times during the progress of the Work, Contractor shall assign a competent resident superintendent who shall not be replaced without written notice to Owner and Engineer except under extraordinary circumstances.

7.02 *Labor; Working Hours*

A. Contractor shall provide competent, suitably qualified personnel to survey and lay out the Work and perform construction as required by the Contract Documents. Contractor shall at all times maintain good discipline and order at the Site.

B. Except as otherwise required for the safety or protection of persons or the Work or property at the Site or adjacent thereto, and except as otherwise stated in the Contract Documents, all Work at the Site shall be performed during regular working hours, Monday through Friday. Contractor will not perform Work on a Saturday, Sunday, or any legal holiday. Contractor may perform Work outside regular working hours or on Saturdays, Sundays, or legal holidays only with Owner's written consent, which will not be unreasonably withheld.

7.03 *Services, Materials, and Equipment*

A. Unless otherwise specified in the Contract Documents, Contractor shall provide and assume full responsibility for all services, materials, equipment, labor, transportation, construction equipment and machinery, tools, appliances, fuel, power, light, heat, telephone, water, sanitary facilities, temporary facilities, and all other facilities and incidentals necessary for

the performance, testing, start up, and completion of the Work, whether or not such items are specifically called for in the Contract Documents.

B. All materials and equipment incorporated into the Work shall be of good quality and new, except as otherwise provided in the Contract Documents. All special warranties and guarantees required by the Specifications shall expressly run to the benefit of Owner. If required by Engineer, Contractor shall furnish satisfactory evidence (including reports of required tests) as to the source, kind, and quality of materials and equipment.

C. All materials and equipment shall be stored, applied, installed, connected, erected, protected, used, cleaned, and conditioned in accordance with instructions of the applicable Supplier, except as otherwise may be provided in the Contract Documents.

7.04 *"Or Equals"*

A. Whenever an item of material or equipment is specified or described in the Contract Documents by using the name of a proprietary item or the name of a particular Supplier, the Contract Price has been based upon Contractor furnishing such item as specified. The specification or description of such an item is intended to establish the type, function, appearance, and quality required. Unless the specification or description contains or is followed by words reading that no like, equivalent, or "or equal" item is permitted, Contractor may request that Engineer authorize the use of other items of material or equipment, or items from other proposed suppliers under the circumstances described below.

1. If Engineer in its sole discretion determines that an item of material or equipment proposed by Contractor is functionally equal to that named and sufficiently similar so that no change in related Work will be required, Engineer shall deem it an "or equal" item. For the purposes of this paragraph, a proposed item of material or equipment will be considered functionally equal to an item so named if:

a. in the exercise of reasonable judgment Engineer determines that:

1) it is at least equal in materials of construction, quality, durability, appearance, strength, and design characteristics;

2) it will reliably perform at least equally well the function and achieve the results imposed by the design concept of the completed Project as a functioning whole;

3) it has a proven record of performance and availability of responsive service; and

4) it is not objectionable to Owner.

b. Contractor certifies that, if approved and incorporated into the Work:

1) there will be no increase in cost to the Owner or increase in Contract Times; and

2) it will conform substantially to the detailed requirements of the item named in the Contract Documents.

B. *Contractor's Expense*: Contractor shall provide all data in support of any proposed "or equal" item at Contractor's expense.

C. *Engineer's Evaluation and Determination*: Engineer will be allowed a reasonable time to evaluate each "or-equal" request. Engineer may require Contractor to furnish additional data about the proposed "or-equal" item. Engineer will be the sole judge of acceptability. No "or-equal" item will be ordered, furnished, installed, or utilized until Engineer's review is complete and Engineer determines that the proposed item is an "or-equal", which will be

evidenced by an approved Shop Drawing or other written communication. Engineer will advise Contractor in writing of any negative determination.

D. *Effect of Engineer's Determination*: Neither approval nor denial of an "or-equal" request shall result in any change in Contract Price. The Engineer's denial of an "or-equal" request shall be final and binding, and may not be reversed through an appeal under any provision of the Contract Documents.

E. *Treatment as a Substitution Request*: If Engineer determines that an item of material or equipment proposed by Contractor does not qualify as an "or-equal" item, Contractor may request that Engineer considered the proposed item as a substitute pursuant to Paragraph 7.05.

7.05 *Substitutes*

A. Unless the specification or description of an item of material or equipment required to be furnished under the Contract Documents contains or is followed by words reading that no substitution is permitted, Contractor may request that Engineer authorize the use of other items of material or equipment under the circumstances described below. To the extent possible such requests shall be made before commencement of related construction at the Site.

1. Contractor shall submit sufficient information as provided below to allow Engineer to determine if the item of material or equipment proposed is functionally equivalent to that named and an acceptable substitute therefor. Engineer will not accept requests for review of proposed substitute items of material or equipment from anyone other than Contractor.

2. The requirements for review by Engineer will be as set forth in Paragraph 7.05.B, as supplemented by the Specifications, and as Engineer may decide is appropriate under the circumstances.

3. Contractor shall make written application to Engineer for review of a proposed substitute item of material or equipment that Contractor seeks to furnish or use. The application:

a. shall certify that the proposed substitute item will:

1) perform adequately the functions and achieve the results called for by the general design,

2) be similar in substance to that specified, and

3) be suited to the same use as that specified.

b. will state:

1) the extent, if any, to which the use of the proposed substitute item will necessitate a change in Contract Times,

2) whether use of the proposed substitute item in the Work will require a change in any of the Contract Documents (or in the provisions of any other direct contract with Owner for other work on the Project) to adapt the design to the proposed substitute item, and

3) whether incorporation or use of the proposed substitute item in connection with the Work is subject to payment of any license fee or royalty.

c. will identify:

1) all variations of the proposed substitute item from that specified, and

2) available engineering, sales, maintenance, repair, and replacement services.

d. shall contain an itemized estimate of all costs or credits that will result directly or indirectly from use of such substitute item, including but not limited to changes in Contract Price, shared savings, costs of redesign, and claims of other contractors affected by any resulting change.

B. *Engineer's Evaluation and Determination*: Engineer will be allowed a reasonable time to evaluate each substitute request, and to obtain comments and direction from Owner. Engineer may require Contractor to furnish additional data about the proposed substitute item. Engineer will be the sole judge of acceptability. No substitute will be ordered, furnished, installed, or utilized until Engineer's review is complete and Engineer determines that the proposed item is an acceptable substitute. Engineer's determination will be evidenced by a Field Order or a proposed Change Order accounting for the substitution itself and all related impacts, including changes in Contract Price or Contract Times. Engineer will advise Contractor in writing of any negative determination.

C. *Special Guarantee*: Owner may require Contractor to furnish at Contractor's expense a special performance guarantee or other surety with respect to any substitute.

D. *Reimbursement of Engineer's Cost*: Engineer will record Engineer's costs in evaluating a substitute proposed or submitted by Contractor. Whether or not Engineer approves a substitute so proposed or submitted by Contractor, Contractor shall reimburse Owner for the reasonable charges of Engineer for evaluating each such proposed substitute. Contractor shall also reimburse Owner for the reasonable charges of Engineer for making changes in the Contract Documents (or in the provisions of any other direct contract with Owner) resulting from the acceptance of each proposed substitute.

E. *Contractor's Expense*: Contractor shall provide all data in support of any proposed substitute at Contractor's expense.

F. *Effect of Engineer's Determination*: If Engineer approves the substitution request, Contractor shall execute the proposed Change Order and proceed with the substitution. The Engineer's denial of a substitution request shall be final and binding, and may not be reversed through an appeal under any provision of the Contract Documents. Contractor may challenge the scope of reimbursement costs imposed under Paragraph 7.05.D, by timely submittal of a Change Proposal.

7.06 *Concerning Subcontractors, Suppliers, and Others*

A. Contractor may retain Subcontractors and Suppliers for the performance of parts of the Work. Such Subcontractors and Suppliers must be acceptable to Owner.

B. Contractor shall retain specific Subcontractors, Suppliers, or other individuals or entities for the performance of designated parts of the Work if required by the Contract to do so.

C. Subsequent to the submittal of Contractor's Bid or final negotiation of the terms of the Contract, Owner may not require Contractor to retain any Subcontractor, Supplier, or other individual or entity to furnish or perform any of the Work against which Contractor has reasonable objection.

D. Prior to entry into any binding subcontract or purchase order, Contractor shall submit to Owner the identity of the proposed Subcontractor or Supplier (unless Owner has already deemed such proposed Subcontractor or Supplier acceptable, during the bidding process or otherwise). Such proposed Subcontractor or Supplier shall be deemed acceptable to Owner unless Owner raises a substantive, reasonable objection within five days.

E. Owner may require the replacement of any Subcontractor, Supplier, or other individual or entity retained by Contractor to perform any part of the Work. Owner also may require Contractor to retain specific replacements; provided, however, that Owner may not require a replacement to which Contractor has a reasonable objection. If Contractor has submitted the

identity of certain Subcontractors, Suppliers, or other individuals or entities for acceptance by Owner, and Owner has accepted it (either in writing or by failing to make written objection thereto), then Owner may subsequently revoke the acceptance of any such Subcontractor, Supplier, or other individual or entity so identified solely on the basis of substantive, reasonable objection after due investigation. Contractor shall submit an acceptable replacement for the rejected Subcontractor, Supplier, or other individual or entity.

F. If Owner requires the replacement of any Subcontractor, Supplier, or other individual or entity retained by Contractor to perform any part of the Work, then Contractor shall be entitled to an adjustment in Contract Price or Contract Times, or both, with respect to the replacement; and Contractor shall initiate a Change Proposal for such adjustment within 30 days of Owner's requirement of replacement.

G. No acceptance by Owner of any such Subcontractor, Supplier, or other individual or entity, whether initially or as a replacement, shall constitute a waiver of the right of Owner to the completion of the Work in accordance with the Contract Documents.

H. On a monthly basis Contractor shall submit to Engineer a complete list of all Subcontractors and Suppliers having a direct contract with Contractor, and of all other Subcontractors and Suppliers known to Contractor at the time of submittal.

I. Contractor shall be fully responsible to Owner and Engineer for all acts and omissions of the Subcontractors, Suppliers, and other individuals or entities performing or furnishing any of the Work just as Contractor is responsible for Contractor's own acts and omissions.

J. Contractor shall be solely responsible for scheduling and coordinating the work of Subcontractors, Suppliers, and all other individuals or entities performing or furnishing any of the Work.

K. Contractor shall restrict all Subcontractors, Suppliers, and such other individuals or entities performing or furnishing any of the Work from communicating with Engineer or Owner, except through Contractor or in case of an emergency, or as otherwise expressly allowed herein.

L. The divisions and sections of the Specifications and the identifications of any Drawings shall not control Contractor in dividing the Work among Subcontractors or Suppliers or delineating the Work to be performed by any specific trade.

M. All Work performed for Contractor by a Subcontractor or Supplier shall be pursuant to an appropriate contractual agreement that specifically binds the Subcontractor or Supplier to the applicable terms and conditions of the Contract Documents for the benefit of Owner and Engineer.

N. Owner may furnish to any Subcontractor or Supplier, to the extent practicable, information about amounts paid to Contractor on account of Work performed for Contractor by the particular Subcontractor or Supplier.

O. Nothing in the Contract Documents:

1. shall create for the benefit of any such Subcontractor, Supplier, or other individual or entity any contractual relationship between Owner or Engineer and any such Subcontractor, Supplier, or other individual or entity; nor

2. shall create any obligation on the part of Owner or Engineer to pay or to see to the payment of any money due any such Subcontractor, Supplier, or other individual or entity except as may otherwise be required by Laws and Regulations.

7.07 *Patent Fees and Royalties*

A. Contractor shall pay all license fees and royalties and assume all costs incident to the use in the performance of the Work or the incorporation in the Work of any invention, design,

process, product, or device which is the subject of patent rights or copyrights held by others. If a particular invention, design, process, product, or device is specified in the Contract Documents for use in the performance of the Work and if, to the actual knowledge of Owner or Engineer, its use is subject to patent rights or copyrights calling for the payment of any license fee or royalty to others, the existence of such rights shall be disclosed by Owner in the Contract Documents.

B. To the fullest extent permitted by Laws and Regulations, Owner shall indemnify and hold harmless Contractor, and its officers, directors, members, partners, employees, agents, consultants, and subcontractors from and against all claims, costs, losses, and damages (including but not limited to all fees and charges of engineers, architects, attorneys, and other professionals, and all court or arbitration or other dispute resolution costs) arising out of or relating to any infringement of patent rights or copyrights incident to the use in the performance of the Work or resulting from the incorporation in the Work of any invention, design, process, product, or device specified in the Contract Documents, but not identified as being subject to payment of any license fee or royalty to others required by patent rights or copyrights.

C. To the fullest extent permitted by Laws and Regulations, Contractor shall indemnify and hold harmless Owner and Engineer, and the officers, directors, members, partners, employees, agents, consultants and subcontractors of each and any of them from and against all claims, costs, losses, and damages (including but not limited to all fees and charges of engineers, architects, attorneys, and other professionals and all court or arbitration or other dispute resolution costs) arising out of or relating to any infringement of patent rights or copyrights incident to the use in the performance of the Work or resulting from the incorporation in the Work of any invention, design, process, product, or device not specified in the Contract Documents.

7.08 *Permits*

A. Unless otherwise provided in the Contract Documents, Contractor shall obtain and pay for all construction permits and licenses. Owner shall assist Contractor, when necessary, in obtaining such permits and licenses. Contractor shall pay all governmental charges and inspection fees necessary for the prosecution of the Work which are applicable at the time of the submission of Contractor's Bid (or when Contractor became bound under a negotiated contract). Owner shall pay all charges of utility owners for connections for providing permanent service to the Work

7.09 *Taxes*

A. Contractor shall pay all sales, consumer, use, and other similar taxes required to be paid by Contractor in accordance with the Laws and Regulations of the place of the Project which are applicable during the performance of the Work.

7.10 *Laws and Regulations*

A. Contractor shall give all notices required by and shall comply with all Laws and Regulations applicable to the performance of the Work. Except where otherwise expressly required by applicable Laws and Regulations, neither Owner nor Engineer shall be responsible for monitoring Contractor's compliance with any Laws or Regulations.

B. If Contractor performs any Work or takes any other action knowing or having reason to know that it is contrary to Laws or Regulations, Contractor shall bear all resulting costs and losses, and shall indemnify and hold harmless Owner and Engineer, and the officers, directors, members, partners, employees, agents, consultants, and subcontractors of each and any of them from and against all claims, costs, losses, and damages (including but not limited to all fees and charges of engineers, architects, attorneys, and other professionals and all court or arbitration or other dispute resolution costs) arising out of or relating to such

Work or other action. It shall not be Contractor's responsibility to make certain that the Work described in the Contract Documents is in accordance with Laws and Regulations, but this shall not relieve Contractor of Contractor's obligations under Paragraph 3.03.

C. Owner or Contractor may give notice to the other party of any changes after the submission of Contractor's Bid (or after the date when Contractor became bound under a negotiated contract) in Laws or Regulations having an effect on the cost or time of performance of the Work, including but not limited to changes in Laws or Regulations having an effect on procuring permits and on sales, use, value-added, consumption, and other similar taxes. If Owner and Contractor are unable to agree on entitlement to or on the amount or extent, if any, of any adjustment in Contract Price or Contract Times resulting from such changes, then within 30 days of such notice Contractor may submit a Change Proposal, or Owner may initiate a Claim.

7.11 *Record Documents*

A. Contractor shall maintain in a safe place at the Site one printed record copy of all Drawings, Specifications, Addenda, Change Orders, Work Change Directives, Field Orders, written interpretations and clarifications, and approved Shop Drawings. Contractor shall keep such record documents in good order and annotate them to show changes made during construction. These record documents, together with all approved Samples, will be available to Engineer for reference. Upon completion of the Work, Contractor shall deliver these record documents to Engineer.

7.12 *Safety and Protection*

A. Contractor shall be solely responsible for initiating, maintaining, and supervising all safety precautions and programs in connection with the Work. Such responsibility does not relieve Subcontractors of their responsibility for the safety of persons or property in the performance of their work, nor for compliance with applicable safety Laws and Regulations. Contractor shall take all necessary precautions for the safety of, and shall provide the necessary protection to prevent damage, injury, or loss to:

1. all persons on the Site or who may be affected by the Work;

2. all the Work and materials and equipment to be incorporated therein, whether in storage on or off the Site; and

3. other property at the Site or adjacent thereto, including trees, shrubs, lawns, walks, pavements, roadways, structures, other work in progress, utilities, and Underground Facilities not designated for removal, relocation, or replacement in the course of construction.

B. Contractor shall comply with all applicable Laws and Regulations relating to the safety of persons or property, or to the protection of persons or property from damage, injury, or loss; and shall erect and maintain all necessary safeguards for such safety and protection. Contractor shall notify Owner; the owners of adjacent property, Underground Facilities, and other utilities; and other contractors and utility owners performing work at or adjacent to the Site, when prosecution of the Work may affect them, and shall cooperate with them in the protection, removal, relocation, and replacement of their property or work in progress.

C. Contractor shall comply with the applicable requirements of Owner's safety programs, if any. The Supplementary Conditions identify any Owner's safety programs that are applicable to the Work.

D. Contractor shall inform Owner and Engineer of the specific requirements of Contractor's safety program with which Owner's and Engineer's employees and representatives must comply while at the Site.

E. All damage, injury, or loss to any property referred to in Paragraph 7.12.A.2 or 7.12.A.3 caused, directly or indirectly, in whole or in part, by Contractor, any Subcontractor, Supplier, or any other individual or entity directly or indirectly employed by any of them to perform any of the Work, or anyone for whose acts any of them may be liable, shall be remedied by Contractor at its expense (except damage or loss attributable to the fault of Drawings or Specifications or to the acts or omissions of Owner or Engineer or anyone employed by any of them, or anyone for whose acts any of them may be liable, and not attributable, directly or indirectly, in whole or in part, to the fault or negligence of Contractor or any Subcontractor, Supplier, or other individual or entity directly or indirectly employed by any of them).

F. Contractor's duties and responsibilities for safety and protection shall continue until such time as all the Work is completed and Engineer has issued a notice to Owner and Contractor in accordance with Paragraph 15.06.B that the Work is acceptable (except as otherwise expressly provided in connection with Substantial Completion).

G. Contractor's duties and responsibilities for safety and protection shall resume whenever Contractor or any Subcontractor or Supplier returns to the Site to fulfill warranty or correction obligations, or to conduct other tasks arising from the Contract Documents.

7.13 *Safety Representative*

A. Contractor shall designate a qualified and experienced safety representative at the Site whose duties and responsibilities shall be the prevention of accidents and the maintaining and supervising of safety precautions and programs.

7.14 *Hazard Communication Programs*

A. Contractor shall be responsible for coordinating any exchange of material safety data sheets or other hazard communication information required to be made available to or exchanged between or among employers at the Site in accordance with Laws or Regulations.

7.15 *Emergencies*

A. In emergencies affecting the safety or protection of persons or the Work or property at the Site or adjacent thereto, Contractor is obligated to act to prevent threatened damage, injury, or loss. Contractor shall give Engineer prompt written notice if Contractor believes that any significant changes in the Work or variations from the Contract Documents have been caused thereby or are required as a result thereof. If Engineer determines that a change in the Contract Documents is required because of the action taken by Contractor in response to such an emergency, a Work Change Directive or Change Order will be issued.

7.16 *Shop Drawings, Samples, and Other Submittals*

A. *Shop Drawing and Sample Submittal Requirements*:

1. Before submitting a Shop Drawing or Sample, Contractor shall have:

a. reviewed and coordinated the Shop Drawing or Sample with other Shop Drawings and Samples and with the requirements of the Work and the Contract Documents;

b. determined and verified all field measurements, quantities, dimensions, specified performance and design criteria, installation requirements, materials, catalog numbers, and similar information with respect thereto;

c. determined and verified the suitability of all materials and equipment offered with respect to the indicated application, fabrication, shipping, handling, storage, assembly, and installation pertaining to the performance of the Work; and

d. determined and verified all information relative to Contractor's responsibilities for means, methods, techniques, sequences, and procedures of construction, and safety precautions and programs incident thereto.

2. Each submittal shall bear a stamp or specific written certification that Contractor has satisfied Contractor's obligations under the Contract Documents with respect to Contractor's review of that submittal, and that Contractor approves the submittal.

3. With each submittal, Contractor shall give Engineer specific written notice of any variations that the Shop Drawing or Sample may have from the requirements of the Contract Documents. This notice shall be set forth in a written communication separate from the Shop Drawings or Sample submittal; and, in addition, in the case of Shop Drawings by a specific notation made on each Shop Drawing submitted to Engineer for review and approval of each such variation.

B. *Submittal Procedures for Shop Drawings and Samples*: Contractor shall submit Shop Drawings and Samples to Engineer for review and approval in accordance with the accepted Schedule of Submittals. Each submittal will be identified as Engineer may require.

1. *Shop Drawings*:

a. Contractor shall submit the number of copies required in the Specifications.

b. Data shown on the Shop Drawings will be complete with respect to quantities, dimensions, specified performance and design criteria, materials, and similar data to show Engineer the services, materials, and equipment Contractor proposes to provide and to enable Engineer to review the information for the limited purposes required by Paragraph 7.16.D.

2. *Samples*:

a. Contractor shall submit the number of Samples required in the Specifications.

b. Contractor shall clearly identify each Sample as to material, Supplier, pertinent data such as catalog numbers, the use for which intended and other data as Engineer may require to enable Engineer to review the submittal for the limited purposes required by Paragraph 7.16.D.

3. Where a Shop Drawing or Sample is required by the Contract Documents or the Schedule of Submittals, any related Work performed prior to Engineer's review and approval of the pertinent submittal will be at the sole expense and responsibility of Contractor.

C. *Other Submittals*: Contractor shall submit other submittals to Engineer in accordance with the accepted Schedule of Submittals, and pursuant to the applicable terms of the Specifications.

D. *Engineer's Review*:

1. Engineer will provide timely review of Shop Drawings and Samples in accordance with the Schedule of Submittals acceptable to Engineer. Engineer's review and approval will be only to determine if the items covered by the submittals will, after installation or incorporation in the Work, conform to the information given in the Contract Documents and be compatible with the design concept of the completed Project as a functioning whole as indicated by the Contract Documents.

2. Engineer's review and approval will not extend to means, methods, techniques, sequences, or procedures of construction or to safety precautions or programs incident thereto.

3. Engineer's review and approval of a separate item as such will not indicate approval of the assembly in which the item functions.

4. Engineer's review and approval of a Shop Drawing or Sample shall not relieve Contractor from responsibility for any variation from the requirements of the Contract

Documents unless Contractor has complied with the requirements of Paragraph 7.16.A.3 and Engineer has given written approval of each such variation by specific written notation thereof incorporated in or accompanying the Shop Drawing or Sample. Engineer will document any such approved variation from the requirements of the Contract Documents in a Field Order.

5. Engineer's review and approval of a Shop Drawing or Sample shall not relieve Contractor from responsibility for complying with the requirements of Paragraph 7.16.A and B.

6. Engineer's review and approval of a Shop Drawing or Sample, or of a variation from the requirements of the Contract Documents, shall not, under any circumstances, change the Contract Times or Contract Price, unless such changes are included in a Change Order.

7. Neither Engineer's receipt, review, acceptance or approval of a Shop Drawing, Sample, or other submittal shall result in such item becoming a Contract Document.

8. Contractor shall perform the Work in compliance with the requirements and commitments set forth in approved Shop Drawings and Samples, subject to the provisions of Paragraph 7.16.D.4.

E. *Resubmittal Procedures*:

1. Contractor shall make corrections required by Engineer and shall return the required number of corrected copies of Shop Drawings and submit, as required, new Samples for review and approval. Contractor shall direct specific attention in writing to revisions other than the corrections called for by Engineer on previous submittals.

2. Contractor shall furnish required submittals with sufficient information and accuracy to obtain required approval of an item with no more than three submittals. Engineer will record Engineer's time for reviewing a fourth or subsequent submittal of a Shop Drawings, sample, or other item requiring approval, and Contractor shall be responsible for Engineer's charges to Owner for such time. Owner may impose a set-off against payments due to Contractor to secure reimbursement for such charges.

3. If Contractor requests a change of a previously approved submittal item, Contractor shall be responsible for Engineer's charges to Owner for its review time, and Owner may impose a set-off against payments due to Contractor to secure reimbursement for such charges, unless the need for such change is beyond the control of Contractor.

7.17 *Contractor's General Warranty and Guarantee*

A. Contractor warrants and guarantees to Owner that all Work will be in accordance with the Contract Documents and will not be defective. Engineer and its officers, directors, members, partners, employees, agents, consultants, and subcontractors shall be entitled to rely on Contractor's warranty and guarantee.

B. Contractor's warranty and guarantee hereunder excludes defects or damage caused by:

1. abuse, modification, or improper maintenance or operation by persons other than Contractor, Subcontractors, Suppliers, or any other individual or entity for whom Contractor is responsible; or

2. normal wear and tear under normal usage.

C. Contractor's obligation to perform and complete the Work in accordance with the Contract Documents shall be absolute. None of the following will constitute an acceptance of Work that is not in accordance with the Contract Documents or a release of Contractor's obligation to perform the Work in accordance with the Contract Documents:

1. observations by Engineer;
2. recommendation by Engineer or payment by Owner of any progress or final payment;
3. the issuance of a certificate of Substantial Completion by Engineer or any payment related thereto by Owner;
4. use or occupancy of the Work or any part thereof by Owner;
5. any review and approval of a Shop Drawing or Sample submittal;
6. the issuance of a notice of acceptability by Engineer;
7. any inspection, test, or approval by others; or
8. any correction of defective Work by Owner.

D. If the Contract requires the Contractor to accept the assignment of a contract entered into by Owner, then the specific warranties, guarantees, and correction obligations contained in the assigned contract shall govern with respect to Contractor's performance obligations to Owner for the Work described in the assigned contract.

7.18 *Indemnification*

A. To the fullest extent permitted by Laws and Regulations, and in addition to any other obligations of Contractor under the Contract or otherwise, Contractor shall indemnify and hold harmless Owner and Engineer, and the officers, directors, members, partners, employees, agents, consultants and subcontractors of each and any of them from and against all claims, costs, losses, and damages (including but not limited to all fees and charges of engineers, architects, attorneys, and other professionals and all court or arbitration or other dispute resolution costs) arising out of or relating to the performance of the Work, provided that any such claim, cost, loss, or damage is attributable to bodily injury, sickness, disease, or death, or to injury to or destruction of tangible property (other than the Work itself), including the loss of use resulting therefrom but only to the extent caused by any negligent act or omission of Contractor, any Subcontractor, any Supplier, or any individual or entity directly or indirectly employed by any of them to perform any of the Work or anyone for whose acts any of them may be liable.

B. In any and all claims against Owner or Engineer or any of their officers, directors, members, partners, employees, agents, consultants, or subcontractors by any employee (or the survivor or personal representative of such employee) of Contractor, any Subcontractor, any Supplier, or any individual or entity directly or indirectly employed by any of them to perform any of the Work, or anyone for whose acts any of them may be liable, the indemnification obligation under Paragraph 7.18.A shall not be limited in any way by any limitation on the amount or type of damages, compensation, or benefits payable by or for Contractor or any such Subcontractor, Supplier, or other individual or entity under workers' compensation acts, disability benefit acts, or other employee benefit acts.

C. The indemnification obligations of Contractor under Paragraph 7.18.A shall not extend to the liability of Engineer and Engineer's officers, directors, members, partners, employees, agents, consultants and subcontractors arising out of:

1. the preparation or approval of, or the failure to prepare or approve maps, Drawings, opinions, reports, surveys, Change Orders, designs, or Specifications; or
2. giving directions or instructions, or failing to give them, if that is the primary cause of the injury or damage.

7.19 *Delegation of Professional Design Services*

A. Contractor will not be required to provide professional design services unless such services are specifically required by the Contract Documents for a portion of the Work or unless such

services are required to carry out Contractor's responsibilities for construction means, methods, techniques, sequences and procedures. Contractor shall not be required to provide professional services in violation of applicable Laws and Regulations.

B. If professional design services or certifications by a design professional related to systems, materials, or equipment are specifically required of Contractor by the Contract Documents, Owner and Engineer will specify all performance and design criteria that such services must satisfy. Contractor shall cause such services or certifications to be provided by a properly licensed professional, whose signature and seal shall appear on all drawings, calculations, specifications, certifications, and other submittals prepared by such professional. Shop Drawings and other submittals related to the Work designed or certified by such professional, if prepared by others, shall bear such professional's written approval when submitted to Engineer.

C. Owner and Engineer shall be entitled to rely upon the adequacy, accuracy, and completeness of the services, certifications, or approvals performed by such design professionals, provided Owner and Engineer have specified to Contractor all performance and design criteria that such services must satisfy.

D. Pursuant to this paragraph, Engineer's review and approval of design calculations and design drawings will be only for the limited purpose of checking for conformance with performance and design criteria given and the design concept expressed in the Contract Documents. Engineer's review and approval of Shop Drawings and other submittals (except design calculations and design drawings) will be only for the purpose stated in Paragraph 7.16.D.1.

E. Contractor shall not be responsible for the adequacy of the performance or design criteria specified by Owner or Engineer.

ARTICLE 8 – OTHER WORK AT THE SITE

8.01 *Other Work*

A. In addition to and apart from the Work under the Contract Documents, the Owner may perform other work at or adjacent to the Site. Such other work may be performed by Owner's employees, or through contracts between the Owner and third parties. Owner may also arrange to have third-party utility owners perform work on their utilities and facilities at or adjacent to the Site.

B. If Owner performs other work at or adjacent to the Site with Owner's employees, or through contracts for such other work, then Owner shall give Contractor written notice thereof prior to starting any such other work. If Owner has advance information regarding the start of any utility work at or adjacent to the Site, Owner shall provide such information to Contractor.

C. Contractor shall afford each other contractor that performs such other work, each utility owner performing other work, and Owner, if Owner is performing other work with Owner's employees, proper and safe access to the Site, and provide a reasonable opportunity for the introduction and storage of materials and equipment and the execution of such other work. Contractor shall do all cutting, fitting, and patching of the Work that may be required to properly connect or otherwise make its several parts come together and properly integrate with such other work. Contractor shall not endanger any work of others by cutting, excavating, or otherwise altering such work; provided, however, that Contractor may cut or alter others' work with the written consent of Engineer and the others whose work will be affected.

D. If the proper execution or results of any part of Contractor's Work depends upon work performed by others under this Article 8, Contractor shall inspect such other work and promptly report to Engineer in writing any delays, defects, or deficiencies in such other work that render it unavailable or unsuitable for the proper execution and results of Contractor's

Work. Contractor's failure to so report will constitute an acceptance of such other work as fit and proper for integration with Contractor's Work except for latent defects and deficiencies in such other work.

8.02 *Coordination*

A. If Owner intends to contract with others for the performance of other work at or adjacent to the Site, to perform other work at or adjacent to the Site with Owner's employees, or to arrange to have utility owners perform work at or adjacent to the Site, the following will be set forth in the Supplementary Conditions or provided to Contractor prior to the start of any such other work:

1. the identity of the individual or entity that will have authority and responsibility for coordination of the activities among the various contractors;

2. an itemization of the specific matters to be covered by such authority and responsibility; and

3. the extent of such authority and responsibilities.

B. Unless otherwise provided in the Supplementary Conditions, Owner shall have sole authority and responsibility for such coordination.

8.03 *Legal Relationships*

A. If, in the course of performing other work at or adjacent to the Site for Owner, the Owner's employees, any other contractor working for Owner, or any utility owner causes damage to the Work or to the property of Contractor or its Subcontractors, or delays, disrupts, interferes with, or increases the scope or cost of the performance of the Work, through actions or inaction, then Contractor shall be entitled to an equitable adjustment in the Contract Price or the Contract Times, or both. Contractor must submit any Change Proposal seeking an equitable adjustment in the Contract Price or the Contract Times under this paragraph within 30 days of the damaging, delaying, disrupting, or interfering event. The entitlement to, and extent of, any such equitable adjustment shall take into account information (if any) regarding such other work that was provided to Contractor in the Contract Documents prior to the submittal of the Bid or the final negotiation of the terms of the Contract. When applicable, any such equitable adjustment in Contract Price shall be conditioned on Contractor assigning to Owner all Contractor's rights against such other contractor or utility owner with respect to the damage, delay, disruption, or interference that is the subject of the adjustment. Contractor's entitlement to an adjustment of the Contract Times is conditioned on such adjustment being essential to Contractor's ability to complete the Work within the Contract Times.

B. Contractor shall take reasonable and customary measures to avoid damaging, delaying, disrupting, or interfering with the work of Owner, any other contractor, or any utility owner performing other work at or adjacent to the Site. If Contractor fails to take such measures and as a result damages, delays, disrupts, or interferes with the work of any such other contractor or utility owner, then Owner may impose a set-off against payments due to Contractor, and assign to such other contractor or utility owner the Owner's contractual rights against Contractor with respect to the breach of the obligations set forth in this paragraph.

C. When Owner is performing other work at or adjacent to the Site with Owner's employees, Contractor shall be liable to Owner for damage to such other work, and for the reasonable direct delay, disruption, and interference costs incurred by Owner as a result of Contractor's failure to take reasonable and customary measures with respect to Owner's other work. In response to such damage, delay, disruption, or interference, Owner may impose a set-off against payments due to Contractor.

D. If Contractor damages, delays, disrupts, or interferes with the work of any other contractor, or any utility owner performing other work at or adjacent to the Site, through Contractor's failure to take reasonable and customary measures to avoid such impacts, or if any claim arising out of Contractor's actions, inactions, or negligence in performance of the Work at or adjacent to the Site is made by any such other contractor or utility owner against Contractor, Owner, or Engineer, then Contractor shall (1) promptly attempt to settle the claim as to all parties through negotiations with such other contractor or utility owner, or otherwise resolve the claim by arbitration or other dispute resolution proceeding or at law, and (2) indemnify and hold harmless Owner and Engineer, and the officers, directors, members, partners, employees, agents, consultants and subcontractors of each and any of them from and against any such claims, and against all costs, losses, and damages (including but not limited to all fees and charges of engineers, architects, attorneys, and other professionals and all court or arbitration or other dispute resolution costs) arising out of or relating to such damage, delay, disruption, or interference.

ARTICLE 9 – OWNER'S RESPONSIBILITIES

9.01 *Communications to Contractor*

A. Except as otherwise provided in these General Conditions, Owner shall issue all communications to Contractor through Engineer.

9.02 *Replacement of Engineer*

A. Owner may at its discretion appoint an engineer to replace Engineer, provided Contractor makes no reasonable objection to the replacement engineer. The replacement engineer's status under the Contract Documents shall be that of the former Engineer.

9.03 *Furnish Data*

A. Owner shall promptly furnish the data required of Owner under the Contract Documents.

9.04 *Pay When Due*

A. Owner shall make payments to Contractor when they are due as provided in the Agreement.

9.05 *Lands and Easements; Reports, Tests, and Drawings*

A. Owner's duties with respect to providing lands and easements are set forth in Paragraph 5.01.

B. Owner's duties with respect to providing engineering surveys to establish reference points are set forth in Paragraph 4.03.

C. Article 5 refers to Owner's identifying and making available to Contractor copies of reports of explorations and tests of conditions at the Site, and drawings of physical conditions relating to existing surface or subsurface structures at the Site.

9.06 *Insurance*

A. Owner's responsibilities, if any, with respect to purchasing and maintaining liability and property insurance are set forth in Article 6.

9.07 *Change Orders*

A. Owner's responsibilities with respect to Change Orders are set forth in Article 11.

9.08 *Inspections, Tests, and Approvals*

A. Owner's responsibility with respect to certain inspections, tests, and approvals is set forth in Paragraph 14.02.B.

9.09 *Limitations on Owner's Responsibilities*

A. The Owner shall not supervise, direct, or have control or authority over, nor be responsible for, Contractor's means, methods, techniques, sequences, or procedures of construction, or the safety precautions and programs incident thereto, or for any failure of Contractor to comply with Laws and Regulations applicable to the performance of the Work. Owner will not be responsible for Contractor's failure to perform the Work in accordance with the Contract Documents.

9.10 *Undisclosed Hazardous Environmental Condition*

A. Owner's responsibility in respect to an undisclosed Hazardous Environmental Condition is set forth in Paragraph 5.06.

9.11 *Evidence of Financial Arrangements*

A. Upon request of Contractor, Owner shall furnish Contractor reasonable evidence that financial arrangements have been made to satisfy Owner's obligations under the Contract Documents (including obligations under proposed changes in the Work).

9.12 *Safety Programs*

A. While at the Site, Owner's employees and representatives shall comply with the specific applicable requirements of Contractor's safety programs of which Owner has been informed.

B. Owner shall furnish copies of any applicable Owner safety programs to Contractor.

ARTICLE 10 – ENGINEER'S STATUS DURING CONSTRUCTION

10.01 *Owner's Representative*

A. Engineer will be Owner's representative during the construction period. The duties and responsibilities and the limitations of authority of Engineer as Owner's representative during construction are set forth in the Contract.

10.02 *Visits to Site*

A. Engineer will make visits to the Site at intervals appropriate to the various stages of construction as Engineer deems necessary in order to observe as an experienced and qualified design professional the progress that has been made and the quality of the various aspects of Contractor's executed Work. Based on information obtained during such visits and observations, Engineer, for the benefit of Owner, will determine, in general, if the Work is proceeding in accordance with the Contract Documents. Engineer will not be required to make exhaustive or continuous inspections on the Site to check the quality or quantity of the Work. Engineer's efforts will be directed toward providing for Owner a greater degree of confidence that the completed Work will conform generally to the Contract Documents. On the basis of such visits and observations, Engineer will keep Owner informed of the progress of the Work and will endeavor to guard Owner against defective Work.

B. Engineer's visits and observations are subject to all the limitations on Engineer's authority and responsibility set forth in Paragraph 10.08. Particularly, but without limitation, during or as a result of Engineer's visits or observations of Contractor's Work, Engineer will not supervise, direct, control, or have authority over or be responsible for Contractor's means, methods, techniques, sequences, or procedures of construction, or the safety precautions and programs incident thereto, or for any failure of Contractor to comply with Laws and Regulations applicable to the performance of the Work.

10.03 *Project Representative*

A. If Owner and Engineer have agreed that Engineer will furnish a Resident Project Representative to represent Engineer at the Site and assist Engineer in observing the progress

and quality of the Work, then the authority and responsibilities of any such Resident Project Representative will be as provided in the Supplementary Conditions, and limitations on the responsibilities thereof will be as provided in Paragraph 10.08. If Owner designates another representative or agent to represent Owner at the Site who is not Engineer's consultant, agent, or employee, the responsibilities and authority and limitations thereon of such other individual or entity will be as provided in the Supplementary Conditions.

10.04 *Rejecting Defective Work*

A. Engineer has the authority to reject Work in accordance with Article 14.

10.05 *Shop Drawings, Change Orders and Payments*

A. Engineer's authority, and limitations thereof, as to Shop Drawings and Samples, are set forth in Paragraph 7.16.

B. Engineer's authority, and limitations thereof, as to design calculations and design drawings submitted in response to a delegation of professional design services, if any, are set forth in Paragraph 7.19.

C. Engineer's authority as to Change Orders is set forth in Article 11.

D. Engineer's authority as to Applications for Payment is set forth in Article 15.

10.06 *Determinations for Unit Price Work*

A. Engineer will determine the actual quantities and classifications of Unit Price Work performed by Contractor as set forth in Paragraph 13.03.

10.07 *Decisions on Requirements of Contract Documents and Acceptability of Work*

A. Engineer will render decisions regarding the requirements of the Contract Documents, and judge the acceptability of the Work, pursuant to the specific procedures set forth herein for initial interpretations, Change Proposals, and acceptance of the Work. In rendering such decisions and judgments, Engineer will not show partiality to Owner or Contractor, and will not be liable to Owner, Contractor, or others in connection with any proceedings, interpretations, decisions, or judgments conducted or rendered in good faith.

10.08 *Limitations on Engineer's Authority and Responsibilities*

A. Neither Engineer's authority or responsibility under this Article 10 or under any other provision of the Contract, nor any decision made by Engineer in good faith either to exercise or not exercise such authority or responsibility or the undertaking, exercise, or performance of any authority or responsibility by Engineer, shall create, impose, or give rise to any duty in contract, tort, or otherwise owed by Engineer to Contractor, any Subcontractor, any Supplier, any other individual or entity, or to any surety for or employee or agent of any of them.

B. Engineer will not supervise, direct, control, or have authority over or be responsible for Contractor's means, methods, techniques, sequences, or procedures of construction, or the safety precautions and programs incident thereto, or for any failure of Contractor to comply with Laws and Regulations applicable to the performance of the Work. Engineer will not be responsible for Contractor's failure to perform the Work in accordance with the Contract Documents.

C. Engineer will not be responsible for the acts or omissions of Contractor or of any Subcontractor, any Supplier, or of any other individual or entity performing any of the Work.

D. Engineer's review of the final Application for Payment and accompanying documentation and all maintenance and operating instructions, schedules, guarantees, bonds, certificates of inspection, tests and approvals, and other documentation required to be delivered by Paragraph 15.06.A will only be to determine generally that their content complies with the

requirements of, and in the case of certificates of inspections, tests, and approvals, that the results certified indicate compliance with the Contract Documents.

E. The limitations upon authority and responsibility set forth in this Paragraph 10.08 shall also apply to the Resident Project Representative, if any.

10.09 *Compliance with Safety Program*

A. While at the Site, Engineer's employees and representatives will comply with the specific applicable requirements of Owner's and Contractor's safety programs (if any) of which Engineer has been informed.

ARTICLE 11 – AMENDING THE CONTRACT DOCUMENTS; CHANGES IN THE WORK

11.01 *Amending and Supplementing Contract Documents*

A. The Contract Documents may be amended or supplemented by a Change Order, a Work Change Directive, or a Field Order.

1. *Change Orders*:

a. If an amendment or supplement to the Contract Documents includes a change in the Contract Price or the Contract Times, such amendment or supplement must be set forth in a Change Order. A Change Order also may be used to establish amendments and supplements of the Contract Documents that do not affect the Contract Price or Contract Times.

b. Owner and Contractor may amend those terms and conditions of the Contract Documents that do not involve (1) the performance or acceptability of the Work, (2) the design (as set forth in the Drawings, Specifications, or otherwise), or (3) other engineering or technical matters, without the recommendation of the Engineer. Such an amendment shall be set forth in a Change Order.

2. *Work Change Directives*: A Work Change Directive will not change the Contract Price or the Contract Times but is evidence that the parties expect that the modification ordered or documented by a Work Change Directive will be incorporated in a subsequently issued Change Order, following negotiations by the parties as to the Work Change Directive's effect, if any, on the Contract Price and Contract Times; or, if negotiations are unsuccessful, by a determination under the terms of the Contract Documents governing adjustments, expressly including Paragraph 11.04 regarding change of Contract Price. Contractor must submit any Change Proposal seeking an adjustment of the Contract Price or the Contract Times, or both, no later than 30 days after the completion of the Work set out in the Work Change Directive. Owner must submit any Claim seeking an adjustment of the Contract Price or the Contract Times, or both, no later than 60 days after issuance of the Work Change Directive.

3. *Field Orders*: Engineer may authorize minor changes in the Work if the changes do not involve an adjustment in the Contract Price or the Contract Times and are compatible with the design concept of the completed Project as a functioning whole as indicated by the Contract Documents. Such changes will be accomplished by a Field Order and will be binding on Owner and also on Contractor, which shall perform the Work involved promptly. If Contractor believes that a Field Order justifies an adjustment in the Contract Price or Contract Times, or both, then before proceeding with the Work at issue, Contractor shall submit a Change Proposal as provided herein.

11.02 *Owner-Authorized Changes in the Work*

A. Without invalidating the Contract and without notice to any surety, Owner may, at any time or from time to time, order additions, deletions, or revisions in the Work. Such changes shall

be supported by Engineer's recommendation, to the extent the change involves the design (as set forth in the Drawings, Specifications, or otherwise), or other engineering or technical matters. Such changes may be accomplished by a Change Order, if Owner and Contractor have agreed as to the effect, if any, of the changes on Contract Times or Contract Price; or by a Work Change Directive. Upon receipt of any such document, Contractor shall promptly proceed with the Work involved; or, in the case of a deletion in the Work, promptly cease construction activities with respect to such deleted Work. Added or revised Work shall be performed under the applicable conditions of the Contract Documents. Nothing in this paragraph shall obligate Contractor to undertake work that Contractor reasonably concludes cannot be performed in a manner consistent with Contractor's safety obligations under the Contract Documents or Laws and Regulations.

11.03 *Unauthorized Changes in the Work*

A. Contractor shall not be entitled to an increase in the Contract Price or an extension of the Contract Times with respect to any work performed that is not required by the Contract Documents, as amended, modified, or supplemented, except in the case of an emergency as provided in Paragraph 7.15 or in the case of uncovering Work as provided in Paragraph 14.05.

11.04 *Change of Contract Price*

A. The Contract Price may only be changed by a Change Order. Any Change Proposal for an adjustment in the Contract Price shall comply with the provisions of Paragraph 11.06. Any Claim for an adjustment of Contract Price shall comply with the provisions of Article 12.

B. An adjustment in the Contract Price will be determined as follows:

1. where the Work involved is covered by unit prices contained in the Contract Documents, then by application of such unit prices to the quantities of the items involved (subject to the provisions of Paragraph 13.03); or

2. where the Work involved is not covered by unit prices contained in the Contract Documents, then by a mutually agreed lump sum (which may include an allowance for overhead and profit not necessarily in accordance with Paragraph 11.04.C.2); or

3. where the Work involved is not covered by unit prices contained in the Contract Documents and the parties do not reach mutual agreement to a lump sum, then on the basis of the Cost of the Work (determined as provided in Paragraph 13.01) plus a Contractor's fee for overhead and profit (determined as provided in Paragraph 11.04.C).

C. *Contractor's Fee*: When applicable, the Contractor's fee for overhead and profit shall be determined as follows:

1. a mutually acceptable fixed fee; or

2. if a fixed fee is not agreed upon, then a fee based on the following percentages of the various portions of the Cost of the Work:

a. for costs incurred under Paragraphs 13.01.B.1 and 13.01.B.2, the Contractor's fee shall be 15 percent;

b. for costs incurred under Paragraph 13.01.B.3, the Contractor's fee shall be five percent;

c. where one or more tiers of subcontracts are on the basis of Cost of the Work plus a fee and no fixed fee is agreed upon, the intent of Paragraphs 11.01.C.2.a and 11.01.C.2.b is that the Contractor's fee shall be based on: (1) a fee of 15 percent of the costs incurred under Paragraphs 13.01.A.1 and 13.01.A.2 by the Subcontractor that actually performs the Work, at whatever tier, and (2) with respect to Contractor itself and to any Subcontractors of a tier higher than that of the

Subcontractor that actually performs the Work, a fee of five percent of the amount (fee plus underlying costs incurred) attributable to the next lower tier Subcontractor; provided, however, that for any such subcontracted work the maximum total fee to be paid by Owner shall be no greater than 27 percent of the costs incurred by the Subcontractor that actually performs the work;

d. no fee shall be payable on the basis of costs itemized under Paragraphs 13.01.B.4, 13.01.B.5, and 13.01.C;

e. the amount of credit to be allowed by Contractor to Owner for any change which results in a net decrease in cost will be the amount of the actual net decrease in cost plus a deduction in Contractor's fee by an amount equal to five percent of such net decrease; and

f. when both additions and credits are involved in any one change, the adjustment in Contractor's fee shall be computed on the basis of the net change in accordance with Paragraphs 11.04.C.2.a through 11.04.C.2.e, inclusive.

11.05 *Change of Contract Times*

A. The Contract Times may only be changed by a Change Order. Any Change Proposal for an adjustment in the Contract Times shall comply with the provisions of Paragraph 11.06. Any Claim for an adjustment in the Contract Times shall comply with the provisions of Article 12.

B. An adjustment of the Contract Times shall be subject to the limitations set forth in Paragraph 4.05, concerning delays in Contractor's progress.

11.06 *Change Proposals*

A. Contractor shall submit a Change Proposal to Engineer to request an adjustment in the Contract Times or Contract Price; appeal an initial decision by Engineer concerning the requirements of the Contract Documents or relating to the acceptability of the Work under the Contract Documents; contest a set-off against payment due; or seek other relief under the Contract. The Change Proposal shall specify any proposed change in Contract Times or Contract Price, or both, or other proposed relief, and explain the reason for the proposed change, with citations to any governing or applicable provisions of the Contract Documents.

1. *Procedures*: Contractor shall submit each Change Proposal to Engineer promptly (but in no event later than 30 days) after the start of the event giving rise thereto, or after such initial decision. The Contractor shall submit supporting data, including the proposed change in Contract Price or Contract Time (if any), to the Engineer and Owner within 15 days after the submittal of the Change Proposal. The supporting data shall be accompanied by a written statement that the supporting data are accurate and complete, and that any requested time or price adjustment is the entire adjustment to which Contractor believes it is entitled as a result of said event. Engineer will advise Owner regarding the Change Proposal, and consider any comments or response from Owner regarding the Change Proposal.

2. *Engineer's Action*: Engineer will review each Change Proposal and, within 30 days after receipt of the Contractor's supporting data, either deny the Change Proposal in whole, approve it in whole, or deny it in part and approve it in part. Such actions shall be in writing, with a copy provided to Owner and Contractor. If Engineer does not take action on the Change Proposal within 30 days, then either Owner or Contractor may at any time thereafter submit a letter to the other party indicating that as a result of Engineer's inaction the Change Proposal is deemed denied, thereby commencing the time for appeal of the denial under Article 12.

3. *Binding Decision*: Engineer's decision will be final and binding upon Owner and Contractor, unless Owner or Contractor appeals the decision by filing a Claim under Article 12.

B. *Resolution of Certain Change Proposals*: If the Change Proposal does not involve the design (as set forth in the Drawings, Specifications, or otherwise), the acceptability of the Work, or other engineering or technical matters, then Engineer will notify the parties that the Engineer is unable to resolve the Change Proposal. For purposes of further resolution of such a Change Proposal, such notice shall be deemed a denial, and Contractor may choose to seek resolution under the terms of Article 12.

11.07 *Execution of Change Orders*

A. Owner and Contractor shall execute appropriate Change Orders covering:

1. changes in the Contract Price or Contract Times which are agreed to by the parties, including any undisputed sum or amount of time for Work actually performed in accordance with a Work Change Directive;

2. changes in Contract Price resulting from an Owner set-off, unless Contractor has duly contested such set-off;

3. changes in the Work which are: (a) ordered by Owner pursuant to Paragraph 11.02, (b) required because of Owner's acceptance of defective Work under Paragraph 14.04 or Owner's correction of defective Work under Paragraph 14.07, or (c) agreed to by the parties, subject to the need for Engineer's recommendation if the change in the Work involves the design (as set forth in the Drawings, Specifications, or otherwise), or other engineering or technical matters; and

4. changes in the Contract Price or Contract Times, or other changes, which embody the substance of any final and binding results under Paragraph 11.06, or Article 12.

B. If Owner or Contractor refuses to execute a Change Order that is required to be executed under the terms of this Paragraph 11.07, it shall be deemed to be of full force and effect, as if fully executed.

11.08 *Notification to Surety*

A. If the provisions of any bond require notice to be given to a surety of any change affecting the general scope of the Work or the provisions of the Contract Documents (including, but not limited to, Contract Price or Contract Times), the giving of any such notice will be Contractor's responsibility. The amount of each applicable bond will be adjusted to reflect the effect of any such change.

ARTICLE 12 – CLAIMS

12.01 *Claims*

A. *Claims Process*: The following disputes between Owner and Contractor shall be submitted to the Claims process set forth in this Article:

1. Appeals by Owner or Contractor of Engineer's decisions regarding Change Proposals;

2. Owner demands for adjustments in the Contract Price or Contract Times, or other relief under the Contract Documents; and

3. Disputes that Engineer has been unable to address because they do not involve the design (as set forth in the Drawings, Specifications, or otherwise), the acceptability of the Work, or other engineering or technical matters.

B. *Submittal of Claim*: The party submitting a Claim shall deliver it directly to the other party to the Contract promptly (but in no event later than 30 days) after the start of the event giving rise thereto; in the case of appeals regarding Change Proposals within 30 days of the decision under appeal. The party submitting the Claim shall also furnish a copy to the Engineer, for its information only. The responsibility to substantiate a Claim shall rest with the party making the Claim. In the case of a Claim by Contractor seeking an increase in the Contract Times or Contract Price, or both, Contractor shall certify that the Claim is made in good faith, that the supporting data are accurate and complete, and that to the best of Contractor's knowledge and belief the amount of time or money requested accurately reflects the full amount to which Contractor is entitled.

C. *Review and Resolution*: The party receiving a Claim shall review it thoroughly, giving full consideration to its merits. The two parties shall seek to resolve the Claim through the exchange of information and direct negotiations. The parties may extend the time for resolving the Claim by mutual agreement. All actions taken on a Claim shall be stated in writing and submitted to the other party, with a copy to Engineer.

D. *Mediation*:

1. At any time after initiation of a Claim, Owner and Contractor may mutually agree to mediation of the underlying dispute. The agreement to mediate shall stay the Claim submittal and response process.

2. If Owner and Contractor agree to mediation, then after 60 days from such agreement, either Owner or Contractor may unilaterally terminate the mediation process, and the Claim submittal and decision process shall resume as of the date of the termination. If the mediation proceeds but is unsuccessful in resolving the dispute, the Claim submittal and decision process shall resume as of the date of the conclusion of the mediation, as determined by the mediator.

3. Owner and Contractor shall each pay one-half of the mediator's fees and costs.

E. *Partial Approval*: If the party receiving a Claim approves the Claim in part and denies it in part, such action shall be final and binding unless within 30 days of such action the other party invokes the procedure set forth in Article 17 for final resolution of disputes.

F. *Denial of Claim*: If efforts to resolve a Claim are not successful, the party receiving the Claim may deny it by giving written notice of denial to the other party. If the receiving party does not take action on the Claim within 90 days, then either Owner or Contractor may at any time thereafter submit a letter to the other party indicating that as a result of the inaction, the Claim is deemed denied, thereby commencing the time for appeal of the denial. A denial of the Claim shall be final and binding unless within 30 days of the denial the other party invokes the procedure set forth in Article 17 for the final resolution of disputes.

G. *Final and Binding Results*: If the parties reach a mutual agreement regarding a Claim, whether through approval of the Claim, direct negotiations, mediation, or otherwise; or if a Claim is approved in part and denied in part, or denied in full, and such actions become final and binding; then the results of the agreement or action on the Claim shall be incorporated in a Change Order to the extent they affect the Contract, including the Work, the Contract Times, or the Contract Price.

ARTICLE 13 – COST OF THE WORK; ALLOWANCES; UNIT PRICE WORK

13.01 *Cost of the Work*

A. *Purposes for Determination of Cost of the Work*: The term Cost of the Work means the sum of all costs necessary for the proper performance of the Work at issue, as further defined below. The provisions of this Paragraph 13.01 are used for two distinct purposes:

1. To determine Cost of the Work when Cost of the Work is a component of the Contract Price, under cost-plus-fee, time-and-materials, or other cost-based terms; or

2. To determine the value of a Change Order, Change Proposal, Claim, set-off, or other adjustment in Contract Price. When the value of any such adjustment is determined on the basis of Cost of the Work, Contractor is entitled only to those additional or incremental costs required because of the change in the Work or because of the event giving rise to the adjustment.

B. *Costs Included*: Except as otherwise may be agreed to in writing by Owner, costs included in the Cost of the Work shall be in amounts no higher than those prevailing in the locality of the Project, shall not include any of the costs itemized in Paragraph 13.01.C, and shall include only the following items:

1. Payroll costs for employees in the direct employ of Contractor in the performance of the Work under schedules of job classifications agreed upon by Owner and Contractor. Such employees shall include, without limitation, superintendents, foremen, and other personnel employed full time on the Work. Payroll costs for employees not employed full time on the Work shall be apportioned on the basis of their time spent on the Work. Payroll costs shall include, but not be limited to, salaries and wages plus the cost of fringe benefits, which shall include social security contributions, unemployment, excise, and payroll taxes, workers' compensation, health and retirement benefits, bonuses, sick leave, and vacation and holiday pay applicable thereto. The expenses of performing Work outside of regular working hours, on Saturday, Sunday, or legal holidays, shall be included in the above to the extent authorized by Owner.

2. Cost of all materials and equipment furnished and incorporated in the Work, including costs of transportation and storage thereof, and Suppliers' field services required in connection therewith. All cash discounts shall accrue to Contractor unless Owner deposits funds with Contractor with which to make payments, in which case the cash discounts shall accrue to Owner. All trade discounts, rebates, and refunds and returns from sale of surplus materials and equipment shall accrue to Owner, and Contractor shall make provisions so that they may be obtained.

3. Payments made by Contractor to Subcontractors for Work performed by Subcontractors. If required by Owner, Contractor shall obtain competitive bids from subcontractors acceptable to Owner and Contractor and shall deliver such bids to Owner, who will then determine, with the advice of Engineer, which bids, if any, will be acceptable. If any subcontract provides that the Subcontractor is to be paid on the basis of Cost of the Work plus a fee, the Subcontractor's Cost of the Work and fee shall be determined in the same manner as Contractor's Cost of the Work and fee as provided in this Paragraph 13.01.

4. Costs of special consultants (including but not limited to engineers, architects, testing laboratories, surveyors, attorneys, and accountants) employed for services specifically related to the Work.

5. Supplemental costs including the following:

   a. The proportion of necessary transportation, travel, and subsistence expenses of Contractor's employees incurred in discharge of duties connected with the Work.

   b. Cost, including transportation and maintenance, of all materials, supplies, equipment, machinery, appliances, office, and temporary facilities at the Site, and hand tools not owned by the workers, which are consumed in the performance of the Work, and cost, less market value, of such items used but not consumed which remain the property of Contractor.

c. Rentals of all construction equipment and machinery, and the parts thereof, whether rented from Contractor or others in accordance with rental agreements approved by Owner with the advice of Engineer, and the costs of transportation, loading, unloading, assembly, dismantling, and removal thereof. All such costs shall be in accordance with the terms of said rental agreements. The rental of any such equipment, machinery, or parts shall cease when the use thereof is no longer necessary for the Work.

d. Sales, consumer, use, and other similar taxes related to the Work, and for which Contractor is liable, as imposed by Laws and Regulations.

e. Deposits lost for causes other than negligence of Contractor, any Subcontractor, or anyone directly or indirectly employed by any of them or for whose acts any of them may be liable, and royalty payments and fees for permits and licenses.

f. Losses and damages (and related expenses) caused by damage to the Work, not compensated by insurance or otherwise, sustained by Contractor in connection with the performance of the Work (except losses and damages within the deductible amounts of property insurance established in accordance with Paragraph 6.05), provided such losses and damages have resulted from causes other than the negligence of Contractor, any Subcontractor, or anyone directly or indirectly employed by any of them or for whose acts any of them may be liable. Such losses shall include settlements made with the written consent and approval of Owner. No such losses, damages, and expenses shall be included in the Cost of the Work for the purpose of determining Contractor's fee.

g. The cost of utilities, fuel, and sanitary facilities at the Site.

h. Minor expenses such as communication service at the Site, express and courier services, and similar petty cash items in connection with the Work.

i. The costs of premiums for all bonds and insurance that Contractor is required by the Contract Documents to purchase and maintain.

C. *Costs Excluded*: The term Cost of the Work shall not include any of the following items:

1. Payroll costs and other compensation of Contractor's officers, executives, principals (of partnerships and sole proprietorships), general managers, safety managers, engineers, architects, estimators, attorneys, auditors, accountants, purchasing and contracting agents, expediters, timekeepers, clerks, and other personnel employed by Contractor, whether at the Site or in Contractor's principal or branch office for general administration of the Work and not specifically included in the agreed upon schedule of job classifications referred to in Paragraph 13.01.B.1 or specifically covered by Paragraph 13.01.B.4. The payroll costs and other compensation excluded here are to be considered administrative costs covered by the Contractor's fee.

2. Expenses of Contractor's principal and branch offices other than Contractor's office at the Site.

3. Any part of Contractor's capital expenses, including interest on Contractor's capital employed for the Work and charges against Contractor for delinquent payments.

4. Costs due to the negligence of Contractor, any Subcontractor, or anyone directly or indirectly employed by any of them or for whose acts any of them may be liable, including but not limited to, the correction of defective Work, disposal of materials or equipment wrongly supplied, and making good any damage to property.

5. Other overhead or general expense costs of any kind and the costs of any item not specifically and expressly included in Paragraph 13.01.B.

D. *Contractor's Fee*: When the Work as a whole is performed on the basis of cost-plus, Contractor's fee shall be determined as set forth in the Agreement. When the value of any Work covered by a Change Order, Change Proposal, Claim, set-off, or other adjustment in Contract Price is determined on the basis of Cost of the Work, Contractor's fee shall be determined as set forth in Paragraph 11.04.C.

E. *Documentation*: Whenever the Cost of the Work for any purpose is to be determined pursuant to this Article 13, Contractor will establish and maintain records thereof in accordance with generally accepted accounting practices and submit in a form acceptable to Engineer an itemized cost breakdown together with supporting data.

13.02 *Allowances*

A. It is understood that Contractor has included in the Contract Price all allowances so named in the Contract Documents and shall cause the Work so covered to be performed for such sums and by such persons or entities as may be acceptable to Owner and Engineer.

B. *Cash Allowances*: Contractor agrees that:

1. the cash allowances include the cost to Contractor (less any applicable trade discounts) of materials and equipment required by the allowances to be delivered at the Site, and all applicable taxes; and

2. Contractor's costs for unloading and handling on the Site, labor, installation, overhead, profit, and other expenses contemplated for the cash allowances have been included in the Contract Price and not in the allowances, and no demand for additional payment on account of any of the foregoing will be valid.

C. *Contingency Allowance*: Contractor agrees that a contingency allowance, if any, is for the sole use of Owner to cover unanticipated costs.

D. Prior to final payment, an appropriate Change Order will be issued as recommended by Engineer to reflect actual amounts due Contractor on account of Work covered by allowances, and the Contract Price shall be correspondingly adjusted.

13.03 *Unit Price Work*

A. Where the Contract Documents provide that all or part of the Work is to be Unit Price Work, initially the Contract Price will be deemed to include for all Unit Price Work an amount equal to the sum of the unit price for each separately identified item of Unit Price Work times the estimated quantity of each item as indicated in the Agreement.

B. The estimated quantities of items of Unit Price Work are not guaranteed and are solely for the purpose of comparison of Bids and determining an initial Contract Price. Payments to Contractor for Unit Price Work will be based on actual quantities.

C. Each unit price will be deemed to include an amount considered by Contractor to be adequate to cover Contractor's overhead and profit for each separately identified item.

D. Engineer will determine the actual quantities and classifications of Unit Price Work performed by Contractor. Engineer will review with Contractor the Engineer's preliminary determinations on such matters before rendering a written decision thereon (by recommendation of an Application for Payment or otherwise). Engineer's written decision thereon will be final and binding (except as modified by Engineer to reflect changed factual conditions or more accurate data) upon Owner and Contractor, subject to the provisions of the following paragraph.

E. Within 30 days of Engineer's written decision under the preceding paragraph, Contractor may submit a Change Proposal, or Owner may file a Claim, seeking an adjustment in the Contract Price if:

1. the quantity of any item of Unit Price Work performed by Contractor differs materially and significantly from the estimated quantity of such item indicated in the Agreement;

2. there is no corresponding adjustment with respect to any other item of Work; and

3. Contractor believes that it is entitled to an increase in Contract Price as a result of having incurred additional expense or Owner believes that Owner is entitled to a decrease in Contract Price, and the parties are unable to agree as to the amount of any such increase or decrease.

ARTICLE 14 – TESTS AND INSPECTIONS; CORRECTION, REMOVAL OR ACCEPTANCE OF DEFECTIVE WORK

14.01 *Access to Work*

A. Owner, Engineer, their consultants and other representatives and personnel of Owner, independent testing laboratories, and authorities having jurisdiction will have access to the Site and the Work at reasonable times for their observation, inspection, and testing. Contractor shall provide them proper and safe conditions for such access and advise them of Contractor's safety procedures and programs so that they may comply therewith as applicable.

14.02 *Tests, Inspections, and Approvals*

A. Contractor shall give Engineer timely notice of readiness of the Work (or specific parts thereof) for all required inspections and tests, and shall cooperate with inspection and testing personnel to facilitate required inspections and tests.

B. Owner shall retain and pay for the services of an independent inspector, testing laboratory, or other qualified individual or entity to perform all inspections and tests expressly required by the Contract Documents to be furnished and paid for by Owner, except that costs incurred in connection with tests or inspections of covered Work shall be governed by the provisions of Paragraph 14.05.

C. If Laws or Regulations of any public body having jurisdiction require any Work (or part thereof) specifically to be inspected, tested, or approved by an employee or other representative of such public body, Contractor shall assume full responsibility for arranging and obtaining such inspections, tests, or approvals, pay all costs in connection therewith, and furnish Engineer the required certificates of inspection or approval.

D. Contractor shall be responsible for arranging, obtaining, and paying for all inspections and tests required:

1. by the Contract Documents, unless the Contract Documents expressly allocate responsibility for a specific inspection or test to Owner;

2. to attain Owner's and Engineer's acceptance of materials or equipment to be incorporated in the Work;

3. by manufacturers of equipment furnished under the Contract Documents;

4. for testing, adjusting, and balancing of mechanical, electrical, and other equipment to be incorporated into the Work; and

5. for acceptance of materials, mix designs, or equipment submitted for approval prior to Contractor's purchase thereof for incorporation in the Work.

Such inspections and tests shall be performed by independent inspectors, testing laboratories, or other qualified individuals or entities acceptable to Owner and Engineer.

E. If the Contract Documents require the Work (or part thereof) to be approved by Owner, Engineer, or another designated individual or entity, then Contractor shall assume full responsibility for arranging and obtaining such approvals.

F. If any Work (or the work of others) that is to be inspected, tested, or approved is covered by Contractor without written concurrence of Engineer, Contractor shall, if requested by Engineer, uncover such Work for observation. Such uncovering shall be at Contractor's expense unless Contractor had given Engineer timely notice of Contractor's intention to cover the same and Engineer had not acted with reasonable promptness in response to such notice.

14.03 *Defective Work*

A. *Contractor's Obligation*: It is Contractor's obligation to assure that the Work is not defective.

B. *Engineer's Authority*: Engineer has the authority to determine whether Work is defective, and to reject defective Work.

C. *Notice of Defects*: Prompt notice of all defective Work of which Owner or Engineer has actual knowledge will be given to Contractor.

D. *Correction, or Removal and Replacement*: Promptly after receipt of written notice of defective Work, Contractor shall correct all such defective Work, whether or not fabricated, installed, or completed, or, if Engineer has rejected the defective Work, remove it from the Project and replace it with Work that is not defective.

E. *Preservation of Warranties*: When correcting defective Work, Contractor shall take no action that would void or otherwise impair Owner's special warranty and guarantee, if any, on said Work.

F. *Costs and Damages*: In addition to its correction, removal, and replacement obligations with respect to defective Work, Contractor shall pay all claims, costs, losses, and damages arising out of or relating to defective Work, including but not limited to the cost of the inspection, testing, correction, removal, replacement, or reconstruction of such defective Work, fines levied against Owner by governmental authorities because the Work is defective, and the costs of repair or replacement of work of others resulting from defective Work. Prior to final payment, if Owner and Contractor are unable to agree as to the measure of such claims, costs, losses, and damages resulting from defective Work, then Owner may impose a reasonable set-off against payments due under Article 15.

14.04 *Acceptance of Defective Work*

A. If, instead of requiring correction or removal and replacement of defective Work, Owner prefers to accept it, Owner may do so (subject, if such acceptance occurs prior to final payment, to Engineer's confirmation that such acceptance is in general accord with the design intent and applicable engineering principles, and will not endanger public safety). Contractor shall pay all claims, costs, losses, and damages attributable to Owner's evaluation of and determination to accept such defective Work (such costs to be approved by Engineer as to reasonableness), and for the diminished value of the Work to the extent not otherwise paid by Contractor. If any such acceptance occurs prior to final payment, the necessary revisions in the Contract Documents with respect to the Work shall be incorporated in a Change Order. If the parties are unable to agree as to the decrease in the Contract Price, reflecting the diminished value of Work so accepted, then Owner may impose a reasonable set-off against payments due under Article 15. If the acceptance of defective Work occurs after final payment, Contractor shall pay an appropriate amount to Owner.

14.05 *Uncovering Work*

A. Engineer has the authority to require special inspection or testing of the Work, whether or not the Work is fabricated, installed, or completed.

B. If any Work is covered contrary to the written request of Engineer, then Contractor shall, if requested by Engineer, uncover such Work for Engineer's observation, and then replace the covering, all at Contractor's expense.

C. If Engineer considers it necessary or advisable that covered Work be observed by Engineer or inspected or tested by others, then Contractor, at Engineer's request, shall uncover, expose, or otherwise make available for observation, inspection, or testing as Engineer may require, that portion of the Work in question, and provide all necessary labor, material, and equipment.

1. If it is found that the uncovered Work is defective, Contractor shall be responsible for all claims, costs, losses, and damages arising out of or relating to such uncovering, exposure, observation, inspection, and testing, and of satisfactory replacement or reconstruction (including but not limited to all costs of repair or replacement of work of others); and pending Contractor's full discharge of this responsibility the Owner shall be entitled to impose a reasonable set-off against payments due under Article 15.

2. If the uncovered Work is not found to be defective, Contractor shall be allowed an increase in the Contract Price or an extension of the Contract Times, or both, directly attributable to such uncovering, exposure, observation, inspection, testing, replacement, and reconstruction. If the parties are unable to agree as to the amount or extent thereof, then Contractor may submit a Change Proposal within 30 days of the determination that the Work is not defective.

14.06 *Owner May Stop the Work*

A. If the Work is defective, or Contractor fails to supply sufficient skilled workers or suitable materials or equipment, or fails to perform the Work in such a way that the completed Work will conform to the Contract Documents, then Owner may order Contractor to stop the Work, or any portion thereof, until the cause for such order has been eliminated; however, this right of Owner to stop the Work shall not give rise to any duty on the part of Owner to exercise this right for the benefit of Contractor, any Subcontractor, any Supplier, any other individual or entity, or any surety for, or employee or agent of any of them.

14.07 *Owner May Correct Defective Work*

A. If Contractor fails within a reasonable time after written notice from Engineer to correct defective Work, or to remove and replace rejected Work as required by Engineer, or if Contractor fails to perform the Work in accordance with the Contract Documents, or if Contractor fails to comply with any other provision of the Contract Documents, then Owner may, after seven days written notice to Contractor, correct or remedy any such deficiency.

B. In exercising the rights and remedies under this Paragraph 14.07, Owner shall proceed expeditiously. In connection with such corrective or remedial action, Owner may exclude Contractor from all or part of the Site, take possession of all or part of the Work and suspend Contractor's services related thereto, and incorporate in the Work all materials and equipment stored at the Site or for which Owner has paid Contractor but which are stored elsewhere. Contractor shall allow Owner, Owner's representatives, agents and employees, Owner's other contractors, and Engineer and Engineer's consultants access to the Site to enable Owner to exercise the rights and remedies under this paragraph.

C. All claims, costs, losses, and damages incurred or sustained by Owner in exercising the rights and remedies under this Paragraph 14.07 will be charged against Contractor as set-offs against payments due under Article 15. Such claims, costs, losses and damages will include

but not be limited to all costs of repair, or replacement of work of others destroyed or damaged by correction, removal, or replacement of Contractor's defective Work.

D. Contractor shall not be allowed an extension of the Contract Times because of any delay in the performance of the Work attributable to the exercise by Owner of Owner's rights and remedies under this Paragraph 14.07.

ARTICLE 15 – PAYMENTS TO CONTRACTOR; SET-OFFS; COMPLETION; CORRECTION PERIOD

15.01 *Progress Payments*

A. *Basis for Progress Payments*: The Schedule of Values established as provided in Article 2 will serve as the basis for progress payments and will be incorporated into a form of Application for Payment acceptable to Engineer. Progress payments on account of Unit Price Work will be based on the number of units completed during the pay period, as determined under the provisions of Paragraph 13.03. Progress payments for cost-based Work will be based on Cost of the Work completed by Contractor during the pay period.

B. *Applications for Payments*:

1. At least 20 days before the date established in the Agreement for each progress payment (but not more often than once a month), Contractor shall submit to Engineer for review an Application for Payment filled out and signed by Contractor covering the Work completed as of the date of the Application and accompanied by such supporting documentation as is required by the Contract Documents. If payment is requested on the basis of materials and equipment not incorporated in the Work but delivered and suitably stored at the Site or at another location agreed to in writing, the Application for Payment shall also be accompanied by a bill of sale, invoice, or other documentation warranting that Owner has received the materials and equipment free and clear of all Liens, and evidence that the materials and equipment are covered by appropriate property insurance, a warehouse bond, or other arrangements to protect Owner's interest therein, all of which must be satisfactory to Owner.

2. Beginning with the second Application for Payment, each Application shall include an affidavit of Contractor stating that all previous progress payments received on account of the Work have been applied on account to discharge Contractor's legitimate obligations associated with prior Applications for Payment.

3. The amount of retainage with respect to progress payments will be as stipulated in the Agreement.

C. *Review of Applications*:

1. Engineer will, within 10 days after receipt of each Application for Payment, including each resubmittal, either indicate in writing a recommendation of payment and present the Application to Owner, or return the Application to Contractor indicating in writing Engineer's reasons for refusing to recommend payment. In the latter case, Contractor may make the necessary corrections and resubmit the Application.

2. Engineer's recommendation of any payment requested in an Application for Payment will constitute a representation by Engineer to Owner, based on Engineer's observations of the executed Work as an experienced and qualified design professional, and on Engineer's review of the Application for Payment and the accompanying data and schedules, that to the best of Engineer's knowledge, information and belief:

a. the Work has progressed to the point indicated;

b. the quality of the Work is generally in accordance with the Contract Documents (subject to an evaluation of the Work as a functioning whole prior to or upon Substantial Completion, the results of any subsequent tests called for in the Contract Documents, a final determination of quantities and classifications for Unit Price Work under Paragraph 13.03, and any other qualifications stated in the recommendation); and

c. the conditions precedent to Contractor's being entitled to such payment appear to have been fulfilled in so far as it is Engineer's responsibility to observe the Work.

3. By recommending any such payment Engineer will not thereby be deemed to have represented that:

   a. inspections made to check the quality or the quantity of the Work as it has been performed have been exhaustive, extended to every aspect of the Work in progress, or involved detailed inspections of the Work beyond the responsibilities specifically assigned to Engineer in the Contract; or

   b. there may not be other matters or issues between the parties that might entitle Contractor to be paid additionally by Owner or entitle Owner to withhold payment to Contractor.

4. Neither Engineer's review of Contractor's Work for the purposes of recommending payments nor Engineer's recommendation of any payment, including final payment, will impose responsibility on Engineer:

   a. to supervise, direct, or control the Work, or

   b. for the means, methods, techniques, sequences, or procedures of construction, or the safety precautions and programs incident thereto, or

   c. for Contractor's failure to comply with Laws and Regulations applicable to Contractor's performance of the Work, or

   d. to make any examination to ascertain how or for what purposes Contractor has used the money paid on account of the Contract Price, or

   e. to determine that title to any of the Work, materials, or equipment has passed to Owner free and clear of any Liens.

5. Engineer may refuse to recommend the whole or any part of any payment if, in Engineer's opinion, it would be incorrect to make the representations to Owner stated in Paragraph 15.01.C.2.

6. Engineer will recommend reductions in payment (set-offs) necessary in Engineer's opinion to protect Owner from loss because:

   a. the Work is defective, requiring correction or replacement;

   b. the Contract Price has been reduced by Change Orders;

   c. Owner has been required to correct defective Work in accordance with Paragraph 14.07, or has accepted defective Work pursuant to Paragraph 14.04;

   d. Owner has been required to remove or remediate a Hazardous Environmental Condition for which Contractor is responsible; or

   e. Engineer has actual knowledge of the occurrence of any of the events that would constitute a default by Contractor and therefore justify termination for cause under the Contract Documents.

D. *Payment Becomes Due*:

1. Ten days after presentation of the Application for Payment to Owner with Engineer's recommendation, the amount recommended (subject to any Owner set-offs) will become due, and when due will be paid by Owner to Contractor.

E. *Reductions in Payment by Owner*:

1. In addition to any reductions in payment (set-offs) recommended by Engineer, Owner is entitled to impose a set-off against payment based on any of the following:

   a. claims have been made against Owner on account of Contractor's conduct in the performance or furnishing of the Work, or Owner has incurred costs, losses, or damages on account of Contractor's conduct in the performance or furnishing of the Work, including but not limited to claims, costs, losses, or damages from workplace injuries, adjacent property damage, non-compliance with Laws and Regulations, and patent infringement;

   b. Contractor has failed to take reasonable and customary measures to avoid damage, delay, disruption, and interference with other work at or adjacent to the Site;

   c. Contractor has failed to provide and maintain required bonds or insurance;

   d. Owner has been required to remove or remediate a Hazardous Environmental Condition for which Contractor is responsible;

   e. Owner has incurred extra charges or engineering costs related to submittal reviews, evaluations of proposed substitutes, tests and inspections, or return visits to manufacturing or assembly facilities;

   f. the Work is defective, requiring correction or replacement;

   g. Owner has been required to correct defective Work in accordance with Paragraph 14.07, or has accepted defective Work pursuant to Paragraph 14.04;

   h. the Contract Price has been reduced by Change Orders;

   i. an event that would constitute a default by Contractor and therefore justify a termination for cause has occurred;

   j. liquidated damages have accrued as a result of Contractor's failure to achieve Milestones, Substantial Completion, or final completion of the Work;

   k. Liens have been filed in connection with the Work, except where Contractor has delivered a specific bond satisfactory to Owner to secure the satisfaction and discharge of such Liens;

   l. there are other items entitling Owner to a set off against the amount recommended.

2. If Owner imposes any set-off against payment, whether based on its own knowledge or on the written recommendations of Engineer, Owner will give Contractor immediate written notice (with a copy to Engineer) stating the reasons for such action and the specific amount of the reduction, and promptly pay Contractor any amount remaining after deduction of the amount so withheld. Owner shall promptly pay Contractor the amount so withheld, or any adjustment thereto agreed to by Owner and Contractor, if Contractor remedies the reasons for such action. The reduction imposed shall be binding on Contractor unless it duly submits a Change Proposal contesting the reduction.

3. Upon a subsequent determination that Owner's refusal of payment was not justified, the amount wrongfully withheld shall be treated as an amount due as determined by Paragraph 15.01.C.1 and subject to interest as provided in the Agreement.

15.02 *Contractor's Warranty of Title*

A. Contractor warrants and guarantees that title to all Work, materials, and equipment furnished under the Contract will pass to Owner free and clear of (1) all Liens and other title defects, and (2) all patent, licensing, copyright, or royalty obligations, no later than seven days after the time of payment by Owner.

15.03 *Substantial Completion*

A. When Contractor considers the entire Work ready for its intended use Contractor shall notify Owner and Engineer in writing that the entire Work is substantially complete and request that Engineer issue a certificate of Substantial Completion. Contractor shall at the same time submit to Owner and Engineer an initial draft of punch list items to be completed or corrected before final payment.

B. Promptly after Contractor's notification, Owner, Contractor, and Engineer shall make an inspection of the Work to determine the status of completion. If Engineer does not consider the Work substantially complete, Engineer will notify Contractor in writing giving the reasons therefor.

C. If Engineer considers the Work substantially complete, Engineer will deliver to Owner a preliminary certificate of Substantial Completion which shall fix the date of Substantial Completion. Engineer shall attach to the certificate a punch list of items to be completed or corrected before final payment. Owner shall have seven days after receipt of the preliminary certificate during which to make written objection to Engineer as to any provisions of the certificate or attached punch list. If, after considering the objections to the provisions of the preliminary certificate, Engineer concludes that the Work is not substantially complete, Engineer will, within 14 days after submission of the preliminary certificate to Owner, notify Contractor in writing that the Work is not substantially complete, stating the reasons therefor. If Owner does not object to the provisions of the certificate, or if despite consideration of Owner's objections Engineer concludes that the Work is substantially complete, then Engineer will, within said 14 days, execute and deliver to Owner and Contractor a final certificate of Substantial Completion (with a revised punch list of items to be completed or corrected) reflecting such changes from the preliminary certificate as Engineer believes justified after consideration of any objections from Owner.

D. At the time of receipt of the preliminary certificate of Substantial Completion, Owner and Contractor will confer regarding Owner's use or occupancy of the Work following Substantial Completion, review the builder's risk insurance policy with respect to the end of the builder's risk coverage, and confirm the transition to coverage of the Work under a permanent property insurance policy held by Owner. Unless Owner and Contractor agree otherwise in writing, Owner shall bear responsibility for security, operation, protection of the Work, property insurance, maintenance, heat, and utilities upon Owner's use or occupancy of the Work.

E. After Substantial Completion the Contractor shall promptly begin work on the punch list of items to be completed or corrected prior to final payment. In appropriate cases Contractor may submit monthly Applications for Payment for completed punch list items, following the progress payment procedures set forth above.

F. Owner shall have the right to exclude Contractor from the Site after the date of Substantial Completion subject to allowing Contractor reasonable access to remove its property and complete or correct items on the punch list.

15.04 *Partial Use or Occupancy*

A. Prior to Substantial Completion of all the Work, Owner may use or occupy any substantially completed part of the Work which has specifically been identified in the Contract Documents, or which Owner, Engineer, and Contractor agree constitutes a separately

functioning and usable part of the Work that can be used by Owner for its intended purpose without significant interference with Contractor's performance of the remainder of the Work, subject to the following conditions:

1. At any time Owner may request in writing that Contractor permit Owner to use or occupy any such part of the Work that Owner believes to be substantially complete. If and when Contractor agrees that such part of the Work is substantially complete, Contractor, Owner, and Engineer will follow the procedures of Paragraph 15.03.A through E for that part of the Work.

2. At any time Contractor may notify Owner and Engineer in writing that Contractor considers any such part of the Work substantially complete and request Engineer to issue a certificate of Substantial Completion for that part of the Work.

3. Within a reasonable time after either such request, Owner, Contractor, and Engineer shall make an inspection of that part of the Work to determine its status of completion. If Engineer does not consider that part of the Work to be substantially complete, Engineer will notify Owner and Contractor in writing giving the reasons therefor. If Engineer considers that part of the Work to be substantially complete, the provisions of Paragraph 15.03 will apply with respect to certification of Substantial Completion of that part of the Work and the division of responsibility in respect thereof and access thereto.

4. No use or occupancy or separate operation of part of the Work may occur prior to compliance with the requirements of Paragraph 6.05 regarding builder's risk or other property insurance.

15.05 *Final Inspection*

A. Upon written notice from Contractor that the entire Work or an agreed portion thereof is complete, Engineer will promptly make a final inspection with Owner and Contractor and will notify Contractor in writing of all particulars in which this inspection reveals that the Work, or agreed portion thereof, is incomplete or defective. Contractor shall immediately take such measures as are necessary to complete such Work or remedy such deficiencies.

15.06 *Final Payment*

A. *Application for Payment*:

1. After Contractor has, in the opinion of Engineer, satisfactorily completed all corrections identified during the final inspection and has delivered, in accordance with the Contract Documents, all maintenance and operating instructions, schedules, guarantees, bonds, certificates or other evidence of insurance, certificates of inspection, annotated record documents (as provided in Paragraph 7.11), and other documents, Contractor may make application for final payment.

2. The final Application for Payment shall be accompanied (except as previously delivered) by:

a. all documentation called for in the Contract Documents;

b. consent of the surety, if any, to final payment;

c. satisfactory evidence that all title issues have been resolved such that title to all Work, materials, and equipment has passed to Owner free and clear of any Liens or other title defects, or will so pass upon final payment.

d. a list of all disputes that Contractor believes are unsettled; and

e. complete and legally effective releases or waivers (satisfactory to Owner) of all Lien rights arising out of the Work, and of Liens filed in connection with the Work.

3. In lieu of the releases or waivers of Liens specified in Paragraph 15.06.A.2 and as approved by Owner, Contractor may furnish receipts or releases in full and an affidavit of Contractor that: (a) the releases and receipts include all labor, services, material, and equipment for which a Lien could be filed; and (b) all payrolls, material and equipment bills, and other indebtedness connected with the Work for which Owner might in any way be responsible, or which might in any way result in liens or other burdens on Owner's property, have been paid or otherwise satisfied. If any Subcontractor or Supplier fails to furnish such a release or receipt in full, Contractor may furnish a bond or other collateral satisfactory to Owner to indemnify Owner against any Lien, or Owner at its option may issue joint checks payable to Contractor and specified Subcontractors and Suppliers.

B. *Engineer's Review of Application and Acceptance*:

1. If, on the basis of Engineer's observation of the Work during construction and final inspection, and Engineer's review of the final Application for Payment and accompanying documentation as required by the Contract Documents, Engineer is satisfied that the Work has been completed and Contractor's other obligations under the Contract have been fulfilled, Engineer will, within ten days after receipt of the final Application for Payment, indicate in writing Engineer's recommendation of final payment and present the Application for Payment to Owner for payment. Such recommendation shall account for any set-offs against payment that are necessary in Engineer's opinion to protect Owner from loss for the reasons stated above with respect to progress payments. At the same time Engineer will also give written notice to Owner and Contractor that the Work is acceptable, subject to the provisions of Paragraph 15.07. Otherwise, Engineer will return the Application for Payment to Contractor, indicating in writing the reasons for refusing to recommend final payment, in which case Contractor shall make the necessary corrections and resubmit the Application for Payment.

C. *Completion of Work*: The Work is complete (subject to surviving obligations) when it is ready for final payment as established by the Engineer's written recommendation of final payment.

D. *Payment Becomes Due*: Thirty days after the presentation to Owner of the final Application for Payment and accompanying documentation, the amount recommended by Engineer (less any further sum Owner is entitled to set off against Engineer's recommendation, including but not limited to set-offs for liquidated damages and set-offs allowed under the provisions above with respect to progress payments) will become due and shall be paid by Owner to Contractor.

15.07 *Waiver of Claims*

A. The making of final payment will not constitute a waiver by Owner of claims or rights against Contractor. Owner expressly reserves claims and rights arising from unsettled Liens, from defective Work appearing after final inspection pursuant to Paragraph 15.05, from Contractor's failure to comply with the Contract Documents or the terms of any special guarantees specified therein, from outstanding Claims by Owner, or from Contractor's continuing obligations under the Contract Documents.

B. The acceptance of final payment by Contractor will constitute a waiver by Contractor of all claims and rights against Owner other than those pending matters that have been duly submitted or appealed under the provisions of Article 17.

15.08 *Correction Period*

A. If within one year after the date of Substantial Completion (or such longer period of time as may be prescribed by the terms of any applicable special guarantee required by the Contract Documents, or by any specific provision of the Contract Documents), any Work is found to be defective, or if the repair of any damages to the Site, adjacent areas that Contractor has arranged to use through construction easements or otherwise, and other adjacent areas used by Contractor as permitted by Laws and Regulations, is found to be defective, then Contractor shall promptly, without cost to Owner and in accordance with Owner's written instructions:

1. correct the defective repairs to the Site or such other adjacent areas;
2. correct such defective Work;
3. if the defective Work has been rejected by Owner, remove it from the Project and replace it with Work that is not defective, and
4. satisfactorily correct or repair or remove and replace any damage to other Work, to the work of others, or to other land or areas resulting therefrom.

B. If Contractor does not promptly comply with the terms of Owner's written instructions, or in an emergency where delay would cause serious risk of loss or damage, Owner may have the defective Work corrected or repaired or may have the rejected Work removed and replaced. Contractor shall pay all claims, costs, losses, and damages (including but not limited to all fees and charges of engineers, architects, attorneys, and other professionals and all court or arbitration or other dispute resolution costs) arising out of or relating to such correction or repair or such removal and replacement (including but not limited to all costs of repair or replacement of work of others).

C. In special circumstances where a particular item of equipment is placed in continuous service before Substantial Completion of all the Work, the correction period for that item may start to run from an earlier date if so provided in the Specifications.

D. Where defective Work (and damage to other Work resulting therefrom) has been corrected or removed and replaced under this paragraph, the correction period hereunder with respect to such Work will be extended for an additional period of one year after such correction or removal and replacement has been satisfactorily completed.

E. Contractor's obligations under this paragraph are in addition to all other obligations and warranties. The provisions of this paragraph shall not be construed as a substitute for, or a waiver of, the provisions of any applicable statute of limitation or repose.

ARTICLE 16 – SUSPENSION OF WORK AND TERMINATION

16.01 *Owner May Suspend Work*

A. At any time and without cause, Owner may suspend the Work or any portion thereof for a period of not more than 90 consecutive days by written notice to Contractor and Engineer. Such notice will fix the date on which Work will be resumed. Contractor shall resume the Work on the date so fixed. Contractor shall be entitled to an adjustment in the Contract Price or an extension of the Contract Times, or both, directly attributable to any such suspension. Any Change Proposal seeking such adjustments shall be submitted no later than 30 days after the date fixed for resumption of Work.

16.02 *Owner May Terminate for Cause*

A. The occurrence of any one or more of the following events will constitute a default by Contractor and justify termination for cause:

1. Contractor's persistent failure to perform the Work in accordance with the Contract Documents (including, but not limited to, failure to supply sufficient skilled workers or suitable materials or equipment or failure to adhere to the Progress Schedule);

2. Failure of Contractor to perform or otherwise to comply with a material term of the Contract Documents;

3. Contractor's disregard of Laws or Regulations of any public body having jurisdiction; or

4. Contractor's repeated disregard of the authority of Owner or Engineer.

B. If one or more of the events identified in Paragraph 16.02.A occurs, then after giving Contractor (and any surety) ten days written notice that Owner is considering a declaration that Contractor is in default and termination of the contract, Owner may proceed to:

1. declare Contractor to be in default, and give Contractor (and any surety) notice that the Contract is terminated; and

2. enforce the rights available to Owner under any applicable performance bond.

C. Subject to the terms and operation of any applicable performance bond, if Owner has terminated the Contract for cause, Owner may exclude Contractor from the Site, take possession of the Work, incorporate in the Work all materials and equipment stored at the Site or for which Owner has paid Contractor but which are stored elsewhere, and complete the Work as Owner may deem expedient.

D. Owner may not proceed with termination of the Contract under Paragraph 16.02.B if Contractor within seven days of receipt of notice of intent to terminate begins to correct its failure to perform and proceeds diligently to cure such failure.

E. If Owner proceeds as provided in Paragraph 16.02.B, Contractor shall not be entitled to receive any further payment until the Work is completed. If the unpaid balance of the Contract Price exceeds the cost to complete the Work, including all related claims, costs, losses, and damages (including but not limited to all fees and charges of engineers, architects, attorneys, and other professionals) sustained by Owner, such excess will be paid to Contractor. If the cost to complete the Work including such related claims, costs, losses, and damages exceeds such unpaid balance, Contractor shall pay the difference to Owner. Such claims, costs, losses, and damages incurred by Owner will be reviewed by Engineer as to their reasonableness and, when so approved by Engineer, incorporated in a Change Order. When exercising any rights or remedies under this paragraph, Owner shall not be required to obtain the lowest price for the Work performed.

F. Where Contractor's services have been so terminated by Owner, the termination will not affect any rights or remedies of Owner against Contractor then existing or which may thereafter accrue, or any rights or remedies of Owner against Contractor or any surety under any payment bond or performance bond. Any retention or payment of money due Contractor by Owner will not release Contractor from liability.

G. If and to the extent that Contractor has provided a performance bond under the provisions of Paragraph 6.01.A, the provisions of that bond shall govern over any inconsistent provisions of Paragraphs 16.02.B and 16.02.D.

16.03 *Owner May Terminate For Convenience*

A. Upon seven days written notice to Contractor and Engineer, Owner may, without cause and without prejudice to any other right or remedy of Owner, terminate the Contract. In such case, Contractor shall be paid for (without duplication of any items):

1. completed and acceptable Work executed in accordance with the Contract Documents prior to the effective date of termination, including fair and reasonable sums for overhead and profit on such Work;

2. expenses sustained prior to the effective date of termination in performing services and furnishing labor, materials, or equipment as required by the Contract Documents in connection with uncompleted Work, plus fair and reasonable sums for overhead and profit on such expenses; and

3. other reasonable expenses directly attributable to termination, including costs incurred to prepare a termination for convenience cost proposal.

B. Contractor shall not be paid on account of loss of anticipated overhead, profits, or revenue, or other economic loss arising out of or resulting from such termination.

16.04 *Contractor May Stop Work or Terminate*

A. If, through no act or fault of Contractor, (1) the Work is suspended for more than 90 consecutive days by Owner or under an order of court or other public authority, or (2) Engineer fails to act on any Application for Payment within 30 days after it is submitted, or (3) Owner fails for 30 days to pay Contractor any sum finally determined to be due, then Contractor may, upon seven days written notice to Owner and Engineer, and provided Owner or Engineer do not remedy such suspension or failure within that time, terminate the contract and recover from Owner payment on the same terms as provided in Paragraph 16.03.

B. In lieu of terminating the Contract and without prejudice to any other right or remedy, if Engineer has failed to act on an Application for Payment within 30 days after it is submitted, or Owner has failed for 30 days to pay Contractor any sum finally determined to be due, Contractor may, seven days after written notice to Owner and Engineer, stop the Work until payment is made of all such amounts due Contractor, including interest thereon. The provisions of this paragraph are not intended to preclude Contractor from submitting a Change Proposal for an adjustment in Contract Price or Contract Times or otherwise for expenses or damage directly attributable to Contractor's stopping the Work as permitted by this paragraph.

ARTICLE 17 – FINAL RESOLUTION OF DISPUTES

17.01 *Methods and Procedures*

A. *Disputes Subject to Final Resolution*: The following disputed matters are subject to final resolution under the provisions of this Article:

1. A timely appeal of an approval in part and denial in part of a Claim, or of a denial in full; and

2. Disputes between Owner and Contractor concerning the Work or obligations under the Contract Documents, and arising after final payment has been made.

B. *Final Resolution of Disputes*: For any dispute subject to resolution under this Article, Owner or Contractor may:

1. elect in writing to invoke the dispute resolution process provided for in the Supplementary Conditions; or

2. agree with the other party to submit the dispute to another dispute resolution process; or

3. if no dispute resolution process is provided for in the Supplementary Conditions or mutually agreed to, give written notice to the other party of the intent to submit the dispute to a court of competent jurisdiction.

ARTICLE 18 – MISCELLANEOUS

18.01 *Giving Notice*

A. Whenever any provision of the Contract Documents requires the giving of written notice, it will be deemed to have been validly given if:

1. delivered in person, by a commercial courier service or otherwise, to the individual or to a member of the firm or to an officer of the corporation for which it is intended; or

2. delivered at or sent by registered or certified mail, postage prepaid, to the last business address known to the sender of the notice.

18.02 *Computation of Times*

A. When any period of time is referred to in the Contract by days, it will be computed to exclude the first and include the last day of such period. If the last day of any such period falls on a Saturday or Sunday or on a day made a legal holiday by the law of the applicable jurisdiction, such day will be omitted from the computation.

18.03 *Cumulative Remedies*

A. The duties and obligations imposed by these General Conditions and the rights and remedies available hereunder to the parties hereto are in addition to, and are not to be construed in any way as a limitation of, any rights and remedies available to any or all of them which are otherwise imposed or available by Laws or Regulations, by special warranty or guarantee, or by other provisions of the Contract. The provisions of this paragraph will be as effective as if repeated specifically in the Contract Documents in connection with each particular duty, obligation, right, and remedy to which they apply.

18.04 *Limitation of Damages*

A. With respect to any and all Change Proposals, Claims, disputes subject to final resolution, and other matters at issue, neither Owner nor Engineer, nor any of their officers, directors, members, partners, employees, agents, consultants, or subcontractors, shall be liable to Contractor for any claims, costs, losses, or damages sustained by Contractor on or in connection with any other project or anticipated project.

18.05 *No Waiver*

A. A party's non-enforcement of any provision shall not constitute a waiver of that provision, nor shall it affect the enforceability of that provision or of the remainder of this Contract.

18.06 *Survival of Obligations*

A. All representations, indemnifications, warranties, and guarantees made in, required by, or given in accordance with the Contract, as well as all continuing obligations indicated in the Contract, will survive final payment, completion, and acceptance of the Work or termination or completion of the Contract or termination of the services of Contractor.

18.07 *Controlling Law*

A. This Contract is to be governed by the law of the state in which the Project is located.

18.08 *Headings*

A. Article and paragraph headings are inserted for convenience only and do not constitute parts of these General Conditions.

Supplementary Conditions

These Supplementary Conditions amend or supplement the Standard General Conditions of the Construction Contract, EJCDC® C-700 (2013 Edition). All provisions that are not so amended or supplemented remain in full force and effect.

The terms used in these Supplementary Conditions have the meanings stated in the General Conditions. Additional terms used in these Supplementary Conditions have the meanings stated below, which are applicable to both the singular and plural thereof.

The address system used in these Supplementary Conditions is the same as the address system used in the General Conditions, with the prefix "SC" added thereto.

ARTICLE 5 – AVAILABILITY OF LANDS; SUBSURFACE AND PHYSICAL CONDITIONS; HAZARDOUS ENVIRONMENTAL CONDITIONS

SC-5.03 Subsurface and Physical Conditions

SC-5.03 Delete Paragraphs 5.03.A and 5.03.B in their entirety and insert the following:

A. No reports of exploration or test of subsurface conditions at or adjacent to the Site, or drawings of physical conditions relating to existing surface or subsurface structures at the Site, are known to the Owner.

SC-5.06 Hazardous Environmental Conditions

SC 5.06 Delete Paragraphs 5.06.A and 5.06.B in their entirety and insert the following:

A. No reports or drawings related to Hazardous Environmental Conditions at the Site are known to Owner.

B. Not Used.

ARTICLE 6 – BONDS AND INSURANCE

SC-6.03 Contractor's Liability Insurance

SC 6.03 Add the following new paragraph immediately after Paragraph 6.03.J:

K. The limits of liability for the insurance required by Paragraph 6.03 of the General Conditions shall provide coverage for not less than the following amounts or greater where required by Laws and Regulations:

1. Workers' Compensation, and related coverages under Paragraphs 6.03.A.1 and A.2 of the General Conditions:

$1,000,000.00 limit each accident

2. Contractor's Commercial General Liability under Paragraphs 6.03.B and 6.03.C of the General Conditions:

Combined single limit of $1,000,000.00 each occurrence for bodily injury 7 property damage. Must include 60 day written notice for change of coverate, cancellation, or non-renewal of coverate. Must name "The Charter Township of Ypsilanti and its past, present, and future elected officials shall be named as "additional named insured" on the general liability policy with respect to the services provided under this contract' – Occurrence basis.

3. **Automobile Liability under Paragraph 6.03.D of the General Conditions:**

   Covers owned, hired, and non-owned vehicles with personal protection insurance and property protection. Includes residual liability insurance with a combined single limit of $1,000,000.00 each accident for bodily injury and property damage.

4. **Owner's Protective Liability**

   Combined single limit of $1,000,000.00 each occurrence for bodily injury & property damage.

5. **Builder's Risk**

   Option. May be used to cover everything.

ARTICLE 7 – CONTRACTOR'S RESPONSIBILITIES

SC-7.02 Labor; Working Hours

SC-7.02.B. Add the following new subparagraphs immediately after Paragraph 7.02.B:

1. **Regular working hours will be** *7 A.M to 7 P.M.*
2. **Owner's legal holidays shall be defined as U.S. Federal Holidays.**

SC-7.02.B. Amend the first and second sentences of Paragraph 7.02.B to state "…all Work at the Site shall be performed during regular working hours, Monday through Saturday. Contractor will not perform Work on a Sunday or any legal holiday."

SC-7.08 Permits

SC 7.08 Add the following new subparagraphs immediately after Paragraph 7.08.A:

B. A Soil Erosion and Sedimentation Control (SESC) Permit is not required since the Owner is an Authorized Public Agency (APA). However, the Contractor will need to construct the project in accordance with SESC measure as described in the bidding plans and specifications.

ARTICLE 10 – ENGINEER'S STATUS DURING CONSTRUCTION

SC-10.03 Project Representative

SC-10.03 Add the following new paragraphs immediately after Paragraph 10.03.A:

B. The Resident Project Representative (RPR) will be Engineer's representative at the Site, will act as directed by and under the supervision of Engineer, and will confer with Engineer regarding RPR's actions.

1. **General: RPR's dealings in matters pertaining to the Work in general shall be with Engineer and Contractor. RPR's dealings with Subcontractors shall only be through or with the full knowledge and approval of Contractor. RPR shall generally communicate with Owner only with the knowledge of and under the direction of Engineer.**
2. **Schedules: Review the progress schedule, schedule of Shop Drawing and Sample submittals, and Schedule of Values prepared by Contractor and consult with Engineer concerning acceptability.**
3. **Conferences and Meetings: Attend meetings with Contractor, such as preconstruction conferences, progress meetings, job conferences, and**

other Project-related meetings, and prepare and circulate copies of minutes thereof.

4. **Liaison:**

   a. **Serve as Engineer's liaison with Contractor. Working principally through Contractor's authorized representative or designee, assist in providing information regarding the provisions and intent of the Contract Documents.**

   b. **Assist Engineer in serving as Owner's liaison with Contractor when Contractor's operations affect Owner's on-Site operations.**

   c. **Assist in obtaining from Owner additional details or information, when required for proper execution of the Work.**

5. **Interpretation of Contract Documents: Report to Engineer when clarifications and interpretations of the Contract Documents are needed and transmit to Contractor clarifications and interpretations as issued by Engineer.**

6. **Shop Drawings and Samples:**

   a. **Record date of receipt of Samples and Contractor-approved Shop Drawings.**

   b. **Receive Samples which are furnished at the Site by Contractor, and notify Engineer of availability of Samples for examination.**

   c. **Advise Engineer and Contractor of the commencement of any portion of the Work requiring a Shop Drawing or Sample submittal for which RPR believes that the submittal has not been approved by Engineer.**

7. **Modifications: Consider and evaluate Contractor's suggestions for modifications in Drawings or Specifications and report such suggestions, together with RPR's recommendations, if any, to Engineer. Transmit to Contractor in writing decisions as issued by Engineer.**

8. **Review of Work and Rejection of Defective Work:**

   a. **Conduct on-Site observations of Contractor's work in progress to assist Engineer in determining if the Work is in general proceeding in accordance with the Contract Documents.**

   b. **Report to Engineer whenever RPR believes that any part of Contractor's work in progress is defective, will not produce a completed Project that conforms generally to the Contract Documents, or will imperil the integrity of the design concept of the completed Project as a functioning whole as indicated in the Contract Documents, or has been damaged, or does not meet the requirements of any inspection, test or approval required to be made; and advise Engineer of that part of work in progress that RPR believes should be corrected or rejected or should be uncovered for observation, or requires special testing, inspection or approval.**

9. **Inspections, Tests, and System Start-ups:**

   a. **Verify that tests, equipment, and systems start-ups and operating and maintenance training are conducted in the presence of appropriate**

Owner's personnel, and that Contractor maintains adequate records thereof.

b. Observe, record, and report to Engineer appropriate details relative to the test procedures and systems start-ups.

10. Records:

a. Prepare a daily report or keep a diary or log book, recording Contractor's hours on the Site, Subcontractors present at the Site, weather conditions, data relative to questions of Change Orders, Field Orders, Work Change Directives, or changed conditions, Site visitors, deliveries of equipment or materials, daily activities, decisions, observations in general, and specific observations in more detail as in the case of observing test procedures; and send copies to Engineer.

b. Record names, addresses, fax numbers, e-mail addresses, web site locations, and telephone numbers of all Contractors, Subcontractors, and major Suppliers of materials and equipment.

c. Maintain records for use in preparing Project documentation.

11. Reports:

a. Furnish to Engineer periodic reports as required of progress of the Work and of Contractor's compliance with the Progress Schedule and schedule of Shop Drawing and Sample submittals.

b. Draft and recommend to Engineer proposed Change Orders, Work Change Directives, and Field Orders. Obtain backup material from Contractor.

c. Immediately notify Engineer of the occurrence of any Site accidents, emergencies, acts of God endangering the Work, force majeure or delay events, damage to property by fire or other causes, or the discovery of any Constituent of Concern or Hazardous Environmental Condition.

12. Payment Requests: Review applications for payment with Contractor for compliance with the established procedure for their submission and forward with recommendations to Engineer, noting particularly the relationship of the payment requested to the Schedule of Values, Work completed, and materials and equipment delivered at the Site but not incorporated in the Work.

13. Certificates, Operation and Maintenance Manuals: During the course of the Work, verify that materials and equipment certificates, operation and maintenance manuals and other data required by the Contract Documents to be assembled and furnished by Contractor are applicable to the items actually installed and in accordance with the Contract Documents, and have these documents delivered to Engineer for review and forwarding to Owner prior to payment for that part of the Work.

14. Completion:

a. Participate in Engineer's visits to the Site to determine Substantial Completion, assist in the determination of Substantial Completion and the preparation of a punch list of items to be completed or corrected.

b. **Participate in Engineer's final visit to the Site to determine completion of the Work, in the company of Owner and Contractor, and prepare a final punch list of items to be completed and deficiencies to be remedied.**

c. **Observe whether all items on the final list have been completed or corrected and make recommendations to Engineer concerning acceptance and issuance of the notice of acceptability of the work.**

C. The RPR shall not:

1. **Authorize any deviation from the Contract Documents or substitution of materials or equipment (including "or-equal" items).**
2. **Exceed limitations of Engineer's authority as set forth in the Contract Documents.**
3. **Undertake any of the responsibilities of Contractor, Subcontractors, or Suppliers.**
4. **Advise on, issue directions relative to, or assume control over any aspect of the means, methods, techniques, sequences or procedures of Contractor's work.**
5. **Advise on, issue directions regarding, or assume control over security or safety practices, precautions, and programs in connection with the activities or operations of Owner or Contractor.**
6. **Participate in specialized field or laboratory tests or inspections conducted off-site by others except as specifically authorized by Engineer.**
7. **Accept Shop Drawing or Sample submittals from anyone other than Contractor.**
8. **Authorize Owner to occupy the Project in whole or in part.**

ARTICLE 13 – COST OF THE WORK; ALLOWANCES; UNIT PRICE WORK

SC-13.01 Cost of the Work

SC-13.01 Add the following to the end of Paragraph 13.01.B.1:

Contractor is required to observe and abide by The Charter Township of Ypsilanti's Prevailing Wage and Living Wage requirements. The relevant Township ordinances, as well as the relevant Prevailing Wage Decision are included in the Bidding Documents.

Work Change Directive No.

Date of Issuance:		Effective Date:	
Owner:	Ypsilanti Charter Township	Owner's Contract No.:	
Contractor:		Contractor's Project No.:	
Engineer:	Spicer Group, Inc.	Engineer's Project No.:	129754SG2020
Project:	Community Center Park Improvements	Contract Name:	

Contractor is directed to proceed promptly with the following change(s):

Description:

Attachments: *[List documents supporting change]*

Purpose for Work Change Directive:

Directive to proceed promptly with the Work described herein, prior to agreeing to changes on Contract Price and Contract Time, is issued due to: *[check one or both of the following]*

☐ Non-agreement on pricing of proposed change.

☐ Necessity to proceed for schedule or other Project reasons.

Estimated Change in Contract Price and Contract Times (non-binding, preliminary):

Contract Price $ [increase] [decrease].

Contract Time days [increase] [decrease].

Basis of estimated change in Contract Price:

☐ Lump Sum ☐ Unit Price

☐ Cost of the Work ☐ Other

RECOMMENDED:	AUTHORIZED BY:	RECEIVED:
By:	By:	By:
Engineer (Authorized Signature)	Owner (Authorized Signature)	Contractor (Authorized Signature)
Title:	Title:	Title:
Date:	Date:	Date:

Approved by Funding Agency (if applicable)

By: Date:

Title:

Change Order No. _____

Date of Issuance:	Effective Date:
Owner: Ypsilanti Charter Township	Owner's Contract No.:
Contractor:	Contractor's Project No.:
Engineer: Spicer Group, Inc.	Engineer's Project No.: 129784SG2020
Project: Community Center Park Improvements	Contract Name:

The Contract is modified as follows upon execution of this Change Order:

Description:

Attachments: *[List documents supporting change]*

CHANGE IN CONTRACT PRICE	**CHANGE IN CONTRACT TIMES** *[note changes in Milestones if applicable]*
Original Contract Price: $_____	Original Contract Times: Substantial Completion: _____ Ready for Final Payment: _____ days or dates
[Increase] [Decrease] from previously approved Change Orders No. ___ to No. ___: $_____	[Increase] [Decrease] from previously approved Change Orders No. ___ to No. ___: Substantial Completion: _____ Ready for Final Payment: _____ days
Contract Price prior to this Change Order: $_____	Contract Times prior to this Change Order: Substantial Completion: _____ Ready for Final Payment: _____ days or dates
[Increase] [Decrease] of this Change Order: $_____	[Increase] [Decrease] of this Change Order: Substantial Completion: _____ Ready for Final Payment: _____ days or dates
Contract Price incorporating this Change Order: $_____	Contract Times with all approved Change Orders: Substantial Completion: _____ Ready for Final Payment: _____ days or dates

RECOMMENDED:	ACCEPTED:	ACCEPTED:
By: _____	By: _____	By: _____
Engineer (if required)	Owner (Authorized Signature)	Contractor (Authorized Signature)
Title: _____	Title: _____	Title: _____
Date: _____	Date: _____	Date: _____

Approved by Funding Agency (if applicable)

By: _____ Date:

Title: _____

Field Order No. _____

Date of Issuance:		Effective Date:	
Owner:	Ypsilanti Charter Township	Owner's Contract No.:	
Contractor:		Contractor's Project No.:	
Engineer:	Spicer group, Inc.	Engineer's Project No.:	129784SG2022
Project:	Community Center Park Improvements	Contract Name:	

Contractor is hereby directed to promptly execute this Field Order, issued in accordance with General Conditions Paragraph III "Changes in the Work", for minor changes in the Work without changes in Contract Price or Contract Times. If Contractor considers that a change in Contract Price or Contract Times is required, submit a Change Proposal before proceeding with this Work.

Reference: _____ Specification(s) _____ Drawing(s) / Detail(s)

Description:

Attachments:

ISSUED:	RECEIVED:
By: _____ Engineer (Authorized Signature)	By: _____ Contractor (Authorized Signature)
Title: _____	Title: _____
Date: _____	Date: _____

Copy to: Owner

SECTION 32 18 23.53

TENNIS AND PICKLEBALL SURFACE

PART 1 - GENERAL

1.1 SUMMARY

A. Section Includes:
   1. Acrylic Sport Surface
   2. Tennis Court Striping
   3. Pickleball Court Striping

B. Related Requirements:

   1. Section 32 12 16 - Asphalt Paving

1.2 UNIT PRICE - MEASUREMENT AND PAYMENT

A. Section 01 20 00 - Price and Payment Procedures: Contract Sum/Price modification procedures.

B. Acrylic Sport Surface:

   1. Basis of Measurement: Lump Sum
   2. Basis of Payment: Includes all labor, materials, equipment, cleaning, application and curing of Acrylic Sport Surface.

C. Tennis Court Striping:

   1. Basis of Measurement: By Each
   2. Basis of Payment: Includes all labor, materials equipment, cleaning, application, and curing of Tennis Court Striping for one complete court.

D. Pickleball Court Striping:

   1. Basis of Measurement: By Lineal Foot
   2. Basis of Payment: Includes all labor, materials equipment, cleaning, application, and curing of Pickleball Court Striping for one complete court.

1.3 REFERENCE STANDARDS

A. American Sports Builders Association:

   1. A.S.B.A. Specifications

1.4 SUBMITTALS

A. Section 01 33 00 - Submittal Procedures: Requirements for submittals.

B. Product Data: Submit paint formulation for each type of paint.

C. Manufacturer's Certificate: Certify that products meet or exceed specified requirements.

D. Manufacturer Instructions:

1. Submit instructions for application temperatures, eradication requirements, application rate, line thickness, type of glass beads, and bead embedment and application rate.
2. Submit detailed instructions on installation requirements, including storage and handling procedures.

E. Qualifications Statements:

1. Submit qualifications for manufacturer and applicator.
2. Submit manufacturer's approval of applicator.

1.5 QUALIFICATIONS

A. Manufacturer: Company specializing in manufacturing products specified in this Section with minimum three years' experience.

B. Applicator: Company specializing in performing Work of this Section with minimum three years' experience.

1.6 WARRANTY

A. Section 01 70 00 - Execution and Closeout Requirements: Requirements for warranties.

B. Furnish three-year manufacturer's warranty for pavement markings.

PART 2 - PRODUCTS

2.1 Acrylic Patch Binder

A. Manufacturer:
1. ThorWorks Industris, Inc.
2. Substitutions: As specified in Section 01 60 00 – Product Requirements

2.2 Acrylic Resurfacer

A. Manufacturer:
1. ThorWorks Industries, Inc.
2. Substitutions: As specified in Section 01 60 00 – Product Requirements

2.3 Color Concentrate

A. Manufacturer:
   1. ThorWorks Industries, Inc.
   2. Substitutions: As specified in Section 01 60 00 – Product Requirements

B. Colors:
   1. Forest Green
   2. Red

2.4 Lines

A. Manufacturer:
   1. ThorWorks Industries, Inc.
   2. Substitutions: As specified in Section 01 60 00 – Product Requirements

B. Product:
   1. T/C White Line Paint

PART 3 - EXECUTION

3.1 PREPARATION

A. New asphalt pavement shall cure for 14 days prior to application of any surfacing materials.

B. Contractors must notify the Owner construction representative of all applications, 48 hours prior to installation.

C. The surface to be coated shall be inspected and made sure to be free of grease, oil, dust, dirt and other foreign matter before starting work.

D. The surface shall be flooded. Any ponding water remaining that is deep enough to cover the thickness of a five-cent piece shall be corrected using a patch mix per manufacturer's directions.

3.2 APPLICATION

A. Application shall proceed only if the surface is dry and clean and the temperature is at least fifty degrees (50°F) and rising, and the surface temperature is not in excess of one hundred forty degrees (140°F). Do not apply coatings when rain is imminent.

B. Each coat in this system must dry completely before next application. Between each coat, Engineer must inspect entire surface and approve before work may continue. Any defects should be repaired. Scrape surface to remove any lumps, and broom or blow off all loose matter.

C. Follow Manufacturer's recommendation for application of acrylic system.

3.3 LINE MARKINGS

A. Upon completion and acceptance of the court surface, this Contractor shall prepare and paint lines for typical tennis and pickleball courts as shown on the plans.

B. All lines are to be applied by painting between masking tape with a paintbrush or roller.

C. Remove masking tape immediately after lines are dry.

D. Protect adjacent areas and structures (fences, posts, sidewalks, buildings, etc.), which are not to be coated. In the event that coatings are applied to above, remove immediately before drying is complete.

3.4 LIMITATIONS

A. Apply coatings only when ambient temperature is 50 degrees F. and rising, and the surface temperature is not in excess of one hundred forty (140) degrees F.

B. Care should be taken not to apply coatings when rain is forecast or sudden drop of temperature is expected. Climatic conditions such as very cool evenings and high dew points dictate that work should be completed early in the day so the coatings can be exposed to enough warm sunlight to form a film before sunset. The opposite applies during times of high heat, low humidity and drying breezes: under these conditions, work very early in the morning or very late in the day. If the product seems to be drying too fast in hot weather, mist the pavement with water to make the application easier. Care must be taken to allow each application to dry thoroughly prior to recoating.

END OF SECTION 32 18 23.53

SECTION 32 31 13

CHAIN LINK FENCES AND GATES

PART 1 - GENERAL

1.1 SUMMARY

A. Section Includes:

1. Fence framework, fabric, and accessories.
2. Excavation for post bases.
3. Concrete foundation for posts.
4. Manual gates and related hardware.
5. Privacy slats.

1.2 UNIT PRICE - MEASUREMENT AND PAYMENT

A. Fencing, __ foot:

1. Basis of Measurement: By linear foot to fence height specified, based on specified post spacing.
2. Basis of Payment: Includes posts, rails, tension wire, fabric, windscreen, accessories, and attachments. Gates are included in the Fencing pay item. Engineer will measure Fencing horizontally along the path of the fence. The Fencing, 10 Foot pay item is to be used at the Engineer's discretion where the existing fence fabric is not re-useable.

B. Fencing, 10 Foot, Salvaged

1. Basis of Measurement: By lineal foot to fence height specified, based on specified post spacing.
2. Basis of Payment: Includes new posts, rails, tension wire, accessories, windscreen, and attachments. Fabric salvaged from the existing fence on site to be incorporated into this work. Gates are included in the Fencing, 10 Foot, Salvaged pay item if fabric can be re-used. Engineer will measure Fencing horizontally along the path of the fence.

C. Fence Strip Footing:

1. Basis of Measurement: By Lineal Foot
2. Basis of Payment: Includes excavation, forming, placement, reinforcing, stripping forms, backfill with specified material, backfill compaction, and finishing of a strip footing. Engineer will measure Fence Strip Footing horizontally along the path of the fence.

1.3 REFERENCES

A. ASTM International:

1. ASTM A121 - Standard Specification for Metallic-Coated Carbon Steel Barbed Wire.

2. ASTM A123/A123M - Standard Specification for Zinc (Hot-Dip Galvanized) Coatings on Iron and Steel Products.
3. ASTM A153/A153M - Standard Specification for Zinc Coating (Hot-Dip) on Iron and Steel Hardware.
4. ASTM A392 - Standard Specification for Zinc-Coated Steel Chain-Link Fence Fabric.
5. ASTM A491 - Standard Specification for Aluminum-Coated Steel Chain-Link Fence Fabric.
6. ASTM A817 - Standard Specification for Metallic-Coated Steel Wire for Chain-Link Fence Fabric and Marcelled Tension Wire.
7. A1011/A1011M-07 Standard Specification for Steel, Sheet and Strip, Hot-Rolled, Carbon, Structural, High-Strength Low-Alloy, High-Strength Low-Alloy with Improved Formability, and Ultra-High Strength
8. ASTM B429/B429M - Standard Specification for Aluminum-Alloy Extruded Structural Pipe and Tube.
9. ASTM C94/C94M - Standard Specification for Ready-Mixed Concrete.
10. ASTM F552 - Standard Terminology relating to Chain Link Fencing.
11. ASTM F567 - Standard Practice for Installation of Chain-Link Fence.
12. ASTM F626 - Standard Specification for Fence Fittings.
13. ASTM F668 - Standard Specification for Polyvinyl Chloride (PVC) and Other Organic Polymer-Coated Steel Chain-Link Fence Fabric.
14. ASTM F900 - Standard Specification for Industrial and Commercial Swing Gates.
15. ASTM F934 - Standard Specification for Standard Colors for Polymer-Coated Chain Link Fence Materials.
16. ASTM F1043 - Standard Specification for Strength and Protective Coatings on Metal Industrial Chain Link Fence Framework.
17. ASTM F1083 - Standard Specification for Pipe, Steel, Hot-Dipped Zinc-Coated (Galvanized) Welded, for Fence Structures.
18. ASTM F1183 - Standard Specification for Aluminum Alloy Chain Link Fence Fabric.
19. ASTM F1184 - Standard Specification for Industrial and Commercial Horizontal Slide Gates.
20. ASTM F1345 - Standard Specification for Zinc - 5% Aluminum -Mischmetal Alloy-Coated Steel Chain-Link Fence Fabric.

B. Chain Link Fence Manufacturers Institute:

1. CLFMI - Product Manual.

1.4 SYSTEM DESCRIPTION

A. Fence Height: as indicated on Drawings.

B. Line Post Spacing: At intervals not exceeding 10 feet.

C. Fence Post and Rail Strength: Conform to ASTM F1043 Light Industrial Fence quality.

1.5 SUBMITTALS

A. Section 01 33 00 - Submittal Procedures: Requirements for submittals.

B. Shop Drawings: Indicate plan layout, spacing of components, post foundation dimensions, hardware anchorage, gates, and schedule of components.

C. Product Data: Submit data on fabric, posts, accessories, fittings and hardware.

D. Manufacturer's Installation Instructions: Submit installation requirements.

1.6 CLOSEOUT SUBMITTALS

A. Section 01 70 00 - Execution and Closeout Requirements: Closeout procedures.

B. Operation and Maintenance Data: Procedures for submittals.

1.7 QUALITY ASSURANCE

A. Supply material according to CLFMI - Product Manual.

B. Perform installation according to ASTM F567.

C. Perform Work according to of Michigan Department of Transportation standards.

D. Maintain one copy of each document on site.

1.8 QUALIFICATIONS

A. Manufacturer: Company specializing in manufacturing Products specified in this section with minimum three years' experience.

B. Installer: Company specializing in performing work of this section with minimum three years' experience.

1.9 DELIVERY, STORAGE AND HANDLING

A. Section 01 60 00 - Product Requirements: Requirements for transporting, handling, storing, and protecting products.

B. Deliver fence fabric and accessories in packed cartons or firmly tied rolls.

C. Identify each package with manufacturer's name.

D. Store fence fabric and accessories in secure and dry place.

PART 2 - PRODUCTS

2.1 MANUFACTURERS

A. Manufacturers:

1. Allied Fence Mfg., Co
2. Anchor Fence Co.
3. Douglas Sports Equipment
4. Substitutions: Section 01 60 00 - Product Requirements.

2.2 MATERIALS AND COMPONENTS

A. Materials and Components: Conform to CLFMI Product Manual.

B. Fabric Size: CLFMI Tennis Court service.

C. Intermediate Posts: Group IA

D. Terminal, Corner, Rail, Brace, and Gate Posts: Group IA

2.3 ACCESSORIES

A. Caps: Cast steel galvanized; sized to post diameter, set screw retainer.

B. Fittings: Sleeves, bands, clips, rail ends, tension bars, fasteners and fittings; galvanized steel.

C. Windscreen: Douglas Sports Equipment VCP to be installed on 10’ perimeter fence.

D. Safety Cap: Douglas Sports Equipment Poly-Cap to be installed on 4’ fence.

2.4 GATES

A. General:

1. Gate Types, Opening Widths and Directions of Operation: As indicated on Drawings.
2. Factory assemble gates.
3. Design gates for operation by one person.

B. Swing Gates:

1. Fabricate gates to permit 180 degree swing.
2. Gates Construction: ASTM F900 with welded corners. Use of corner fittings is not

2.5 FINISHES

A. Components and Fabric: Galvanized to ASTM A123/A123M for components; ASTM A153/A153M for hardware; ASTM A392 for fabric; 1.8 oz/sq ft coating.

B. Hardware: Galvanized to ASTM A153/A153M, 1.8 oz/sq ft coating.

C. Accessories: Same finish as framing.

PART 3 - EXECUTION

3.1 INSTALLATION

A. Install framework, fabric, accessories and gates according to ASTM F567.

B. Set posts plumb, in concrete footings with top of footing at finish grade. Slope top of concrete for water runoff.

C. Post Footing Depth Below Finish Grade: as shown on the Drawings

D. Brace each gate and corner post to adjacent line post with horizontal center brace rail and diagonal truss rods. Install brace rail one bay from end and gate posts.

E. Install top rail through line post tops and splice with 6 inch long rail sleeves.

F. Install center and bottom brace rail on corner gate leaves.

G. Place fabric on inside of posts and rails.

H. Do not stretch fabric until concrete foundation has cured 28 days.

I. Stretch fabric between terminal posts or at intervals of 100 feet (30 m) maximum, whichever is less.

J. Position bottom of fabric 1 inch above finished grade.

K. Fasten fabric to top rail, line posts, braces, and bottom tension wire with tie wire at maximum 15 inches (380 mm) on centers.

L. Attach fabric to end, corner, and gate posts with tension bars and tension bar clips.

M. Install bottom tension wire stretched taut between terminal posts.

N. Support gates from gate posts. Do not attach hinged side of gate from building wall.

O. Install gate with fabric to match fence. Install three hinges on each gate leaf, latch, catches, drop bolt.

P. Excavate holes for posts to diameter and spacing indicated on Drawings without disturbing underlying materials.

Q. Center and align posts. Place concrete around posts and vibrate or tamp for consolidation. Verify vertical and top alignment of posts and make necessary corrections.

R. Pour concrete footings per plans.

S. Allow footings to cure minimum 7 days before installing fabric and other materials attached to posts.

3.2 ERECTION TOLERANCES

A. Section 01 40 00 - Quality Requirements: Tolerances.

B. Maximum Variation From Plumb: 1/4 inch.

C. Maximum Offset From Indicated Position: 1 inch.

3.3 SCHEDULES

A. Court Perimeter: 10 feet high with windscreen.

B. Pickleball Divider: 4 feet high with safety cap.

END OF SECTION 32 31 13

SECTION 32 91 19

LANDSCAPE GRADING

PART 1 - GENERAL

1.1 SUMMARY

A. Section Includes:

1. Final grade topsoil for finish landscaping.

B. Related Sections:
1. Section 31 23 23 - Fill
2. Section 32 05 13 - Soils for Earthwork

1.2 SUBMITTALS

A. Section 01 33 00 - Submittal Procedures: Submittal procedures

B. Materials Source: Submit name of imported materials source.

C. Manufacturer's Certificate: Certify Products meet or exceed specified requirements.

1.3 QUALITY ASSURANCE

A. Furnish each topsoil material from single source throughout the Work.

B. Perform Work in accordance with Michigan Department of Transportation standard.

C. Maintain one copy on site.

PART 2 - PRODUCTS

2.1 MATERIAL

A. Topsoil: as specified in Section 31 05 13.

PART 3 - EXECUTION

3.1 EXAMINATION

A. Section 01 30 00 - Administrative Requirements: Verification of existing conditions before starting work.

B. Verify substrate base has been contoured and compacted.

3.2 PREPARATION

A. Protect landscaping and other features remaining as final Work.

B. Protect existing structures, fences, sidewalks, utilities, paving, and curbs.

3.3 SUBSTRATE PREPARATION

A. Eliminate uneven areas and low spots.

B. Scarify surface to depth of 3 inches where topsoil is scheduled. Scarify in areas where equipment used for hauling and spreading topsoil has compacted subsoil.

3.4 PLACING TOPSOIL

A. Place topsoil in areas where seeding is required. Place topsoil during dry weather.

B. Fine grade topsoil to eliminate rough or low areas. Maintain profiles and contour of subgrade.

C. Remove roots, weeds, rocks, and foreign material while spreading.

D. Lightly compact placed topsoil.

E. Remove surplus subsoil and topsoil from site.

F. Leave stockpile area and site clean and raked, ready to receive landscaping.

3.5 PROTECTION OF INSTALLED WORK

A. Section 01 70 00 - Execution and Closeout Requirements: Requirements for protecting finished Work.

B. Prohibit construction traffic over topsoil.

3.6 SCHEDULES

A. Compacted topsoil thicknesses:

1. Seeded Grass: 3 inches.

END OF SECTION 32 91 19

SECTION 32 92 19

SEEDING

PART 1 GENERAL

1.1 SUMMARY

A. Section Includes:
   1. Fertilizing.
   2. Seeding.
   3. Hydroseeding.
   4. Mulching.
   5. Maintenance.

B. Related Sections:
   1. Section 31 22 13 - Rough Grading.
   2. Section 32 91 19 - Landscape Grading: Preparation of subsoil and placement of topsoil in preparation for the Work of this section.

1.2 REFERENCES

A. ASTM International:
   1. ASTM C602 - Standard Specification for Agricultural Liming Materials.

B. FS 0-F-241 – Fertilizers, Mixed, Commercial.

1.3 DEFINITIONS

A. Weeds: Include Dandelion, Jimsonweed, Quackgrass, Horsetail, Morning Glory, Rush Grass, Mustard, Lambsquarter, Chickweed, Cress, Crabgrass, Canadian Thistle, Nutgrass, Poison Oak, Blackberry, Tansy Ragwort, Bermuda Grass, Johnson Grass, Poison Ivy, Nut Sedge, Nimble Will, Bindweed, Bent Grass, Wild Garlic, Perennial Sorrel, and Brome Grass.

1.4 PROTECTION

A. Protect landscaping and other features remaining as final Work.

B. Protect existing structures, fences, roads, sidewalks, paving, mailboxes curbs, etc.

1.5 SUBMITTALS

A. Section 01 33 00 - Submittal Procedures: Requirements for submittals.

B. Product Data: Submit data for seed mix, fertilizer, mulch, and other accessories.

C. Manufacturer's Certificate: Certify Products meet or exceed specified requirements.

1.6 CLOSEOUT SUBMITTALS

A. Section 01 70 00 - Execution and Closeout Requirements: Requirements for submittals.

B. Operation and Maintenance Data: Include maintenance instructions, cutting method and maximum grass height; types, application frequency, and recommended coverage of fertilizer.

1.7 QUALITY ASSURANCE

A. Provide seed mixture in containers showing percentage of seed mix, germination percentage, inert matter percentage, weed percentage, year of production, net weight, date of packaging, and location of packaging.

B. Perform Work in accordance with State of Michigan Department of Transportation Standards.

C. Provide signed affidavit stating the amount and type of seed, fertilizer, and mulch applied per acre.

D. Maintain one copy of each document on site.

1.8 REGULATOR REQUIREMENTS

A. Comply with regulatory agencies for fertilizer and herbicide composition.

1.9 QUALIFICATIONS

A. Seed Supplier: Company specializing in manufacturing Products specified in this section with minimum three years documented experience.

B. Installer: Company specializing in performing work of this section with minimum 3 years documented experience.

C. Maintenance Services: Shall be paid by the Contractor for up to one (1) year to guarantee establishment of growth.

1.10 DELIVERY, STORAGE, AND HANDLING

A. Section 01 60 00 - Product Requirements: Product storage and handling requirements.

B. Deliver grass seed mixture in sealed containers. Seed in damaged packaging is not acceptable.

C. Deliver fertilizer in waterproof bags showing weight, chemical analysis, and name of manufacturer.

1.11 MAINTENANCE SERVICE

A. Section 01 70 00 - Execution and Closeout Requirements: Requirements for maintenance service.

B. Maintain seeded and sodded areas immediately after placement until grass is well established, exhibits a vigorous growing condition and is accepted by Owner. Guarantee replacement of dead material for one year from date of substantial completion.

C. Contractor shall be responsible for maintaining adequate seedbed moisture until the sodbed is established.

1.12 WARRANTY AND REPLACEMENT

A. Seeded areas must have a relatively uniform stand of grass with no bare spots over 6 inches square at the time of substantial completion. Reseed at the original rate. All areas failing to establish growth within ninety (90) days after germination or one growing season, whichever is longest, for any reason whatsoever, will be redone at the contractor's expense.

PART 2 PRODUCTS

2.1 MATERIALS

A. Furnish materials in accordance with Municipal, Federal and State Standards.

B. Topsoil: Imported, friable loam; free of subsoil, roots, grass, excessive amounts of weeds, stone, and foreign matter; acidity range (pH) of 5.5 to 7.5; containing a minimum of 4 percent and a maximum of 25 percent organic matter.

C. Seed Mix:
   1. Grass Seed Mix:
      a. Acceptable Seed Supplier: La Crosse Seed Headquarters, or approved equal. Contact: 16450 Felton Rd., Lansing, MI 48906, (800)647-8873, (517) 999-7333. jhallenbeck@laxseed.com
      b. Survivor Mix:
         15% Kentucky Bluegrass (1 variety)
         15% Turf Type (1 elite variety) Perennial Ryegrass
         15% Chewings Fescue (1 elite variety)
         15% Creeping Red Fescue (1 variety)
         40% Turf Type Tall Fescue (1 elite variety)

D. Fertilizer: FS O-F-241, type and grade recommended for grass, with 50% of the elements derived from organic sources and of proportion necessary to eliminate deficiencies of topsoil to the following proportions: 18% nitrogen, 24% phosphoric acid, 6% potassium.
   1. To be placed on landscaping seeding.

E. Mulch: Small grain straw mulch that is clean and weed free unless otherwise indicated.
   1. Hydroseeding Mulching Material: Conwed Verdoyl #2000
   2. Mulch Blankets: North American Green SC150BN, or approved equal, in areas with slopes 4 horizontal to 1 vertical and steeper as indicated on the plans or directed by the Engineer.
      a. Install all mulch blankets with 6-inch North American Green Eco Stakes, or approved equal. Stake according to manufacturer's recommendations as approved by the Engineer.

F. Soil Binding Agent: Non-toxic, biodegradable materials that are environmentally safe. Applied at a rate of 1 lb per 1000 square feet.

G. Water: Clean, fresh and free of substances or matter which could inhibit vigorous growth of grass.

H. Lime: ASTM C602, Class T agricultural limestone containing a minimum 80 percent calcium carbonate equivalent.

I. Erosion Fabric: Jute matting, open weave.

J. Stakes: Softwood lumber, chisel pointed.

K. String: Inorganic fiber.

L. Herbicide: 25% Prometon, 4-bis, and 75% inert ingredients.

2.2 SOURCE QUALITY CONTROL

A. Section 01 40 00 - Quality Requirements: Testing, inspection and analysis requirements.

B. Analyze to ascertain percentage of nitrogen, phosphorus, potash, soluble salt content, organic matter content, and pH value.

C. Provide recommendation for fertilizer and lime application rates for specified seed mix as result of testing.

D. Testing is not required when recent tests and certificates are available for imported topsoil. Submit these test results to testing laboratory. Indicate, by test results, information necessary to determine suitability.

E. Notify Engineer 72 hours prior to hydroseeding and fertilizing for approval to proceed.

PART 3 EXECUTION

3.1 EXAMINATION

A. Section 01 30 00 - Administrative Requirements: Verification of existing conditions before starting work.

B. Verify prepared soil base is ready to receive the Work of this section.

C. Landscape Seeding: Verify that prepared soil base is read to receive the work of this section. See Section 32 91 19 – Landscape Grading.

3.2 FERTILIZING

A. Apply fertilizer at application rate 500 lbs per acre.

B. Apply after smooth raking of topsoil and prior to roller compaction.

C. Do not apply fertilizer at same time or with same machine used to apply seed.

D. Mix fertilizer thoroughly into upper 2 inches of topsoil.

E. Lightly water soil to aid dissipation of fertilizer. Irrigate top level of soil uniformly.

3.3 SEEDING

A. Apply seed at rate of 500 lbs per acre evenly in two intersecting directions. Rake in lightly.

B. Do not seed areas in excess of that which can be mulched on same day.

C. Planting Season: May 1 to October 10 unless otherwise approved by the Engineer.

D. Do not sow immediately following rain, when ground is too dry, or when winds are over 12 mph.

E. Roll seeded area with roller not exceeding 112 lbs/linear foot.

F. Immediately following seeding and compacting, apply mulch to thickness of 1/8 inches. Maintain clear of shrubs and trees.

G. Apply water with fine spray immediately after each area has been mulched. Saturate to 4 inches of soil.

3.4 HYDROSEEDING

A. Apply seeded slurry for lawn with a hydraulic seeder at a rate of 8 lbs per 1000 sq ft evenly in two intersecting directions. Native seed will be seeded at at the rate earlier specified in this section.

B. Do not hydroseed area in excess of what which can be mulched on same day.

C. Immediately following seeding, apply mulch at a rate of 50 lbs per 1000 sq ft. Maintain clear of shrubs and trees.

D. Apply water with a fine spray immediately after each area has been mulched. Saturate to 3 inches of soil.

3.5 SEED PROTECTION

A. Cover seeded slopes where grade is 6 inches per foot or greater with erosion fabric. Roll fabric onto slopes without stretching or pulling.

B. Lay fabric smoothly on surface, bury top end of each section in 6-inch-deep excavated topsoil trench. Overlap edges and ends of adjacent rolls minimum 12 inches. Backfill trench and rake smooth, level with adjacent soil.

C. Secure outside edges and overlaps at 36 inch intervals with stakes.

D. Lightly dress slopes with topsoil to ensure close contact between fabric and soil.

E. At sides of ditches, lay fabric laps in direction of water flow. Lap ends and edges minimum 6 inches.

3.6 QUALITY CONTROL

A. Notify Engineer 3 working days prior to seeding and fertilizing for approval to proceed.

B. Seeding shall not be done during windy weather (above 25 mph) or when the ground is overly wet (saturated) or frozen.

C. All areas that are partially completed to grade, will be prepare and seeded during the first available planting period and will not be allowed to sit idle for long periods of time without receiving the erosion control specified in the contract.

D. Planting Season: April 1 to May 31, or September 1 to October 31. No Seeding shall be done before or after these dates with the Engineer's written approval.

3.7 MAINTENANCE

A. Immediately reseed areas showing bare spots.

B. Repair any eroded areas and reseed immediately.

C. Contractor shall guarantee a uniform grass growth over the entire project and shall reseed bare and thin areas until this is accomplished at no additional cost to the project.

D. Water to prevent grass and soil from drying out.

E. Roll surface to remove minor depressions or irregularities.

F. Control growth of weeds. Apply herbicides. Remedy damage resulting from improper use of herbicides.

G. Repair washouts or gullies.

H. Protect from traffic and erosion in newly seeded areas is the responsibility of the Contractor. Safety fences and/or silt fences with appropriate signage may be used at the Contractor's expense until the grasses are fully established.

END OF SECTION

SECTION 01 10 00

SUMMARY

PART 1 - GENERAL

1.1 SUMMARY

A. Section Includes:

1. Contract description.
2. Contractor's use of Site.
3. Permits.
4. Specification conventions.

1.2 CONTRACT DESCRIPTION

A. Work of the Project includes demolition of an approximately 120’ x 120’ tennis court playing surface, construction of a new 120’ x 120’ tennis and pickleball multi-use playing surface, salvaging fencing, and restoration.

B. Perform Work of Contract under stipulated sum Contract with Owner according to Conditions of Contract.

1.3 CONTRACTOR'S USE OF SITE

A. Access to Site: Contractor may, at their own cost, close the park or portions of the park to public. Contractor is responsible for safety and security of the site. Contractor must allow safe and reasonable access to the Owner or Owner’s representative.

B. Time Restrictions for Performing Work: as described in General and Supplemental Conditions.

C. Construction Plan: Before start of construction, submit by email an electronic file in PDF format of construction plan regarding access to Work, use of Site, and utility outages for acceptance by Owner. After acceptance of plan, construction operations shall comply with accepted plan unless deviations are accepted by Owner in writing.

1.4 PERMITS

A. Furnish any necessary permits for construction of Work and delivery of materials.

1.5 SPECIFICATION CONVENTIONS

A. These Specifications are written in imperative mood and streamlined form. This imperative language is directed to Contractor unless specifically noted otherwise. The words "shall be" are included by inference where a colon (:) is used within sentences or phrases.

PART 2 - PRODUCTS - Not Used

PART 3 - EXECUTION - Not Used

END OF SECTION 01 10 00

SECTION 01 20 00

PRICE AND PAYMENT PROCEDURES

PART 1 - GENERAL

1.1 SECTION INCLUDES

A. Application for Payment.

B. Change procedures.

C. Defect assessment.

D. Unit prices.

1.2 APPLICATION FOR PAYMENT

A. Submit via email electronic file in PDF format of each Application for Payment on EJCDC C-620 - Contractor's Application for Payment.

B. Content and Format: Use Schedule of Values for listing items in Application for Payment.

C. Submit updated construction schedule with each Application for Payment.

D. Payment Period: Submit at intervals stipulated in the Agreement.

E. Submit submittals with transmittal letter as specified in Section 01 33 00 - Submittal Procedures.

F. Substantiating Data: When Architect/Engineer requires substantiating information, submit data justifying dollar amounts in question. Include the following with Application for Payment:
   1. Partial release of liens from major Subcontractors and vendors.
   2. Affidavits attesting to off-Site stored products.
   3. Construction Progress Schedule, revised and current as specified in Section 01 33 00 - Submittal Procedures.

1.3 CHANGE PROCEDURES

A. Submittals: Submit name of individual who is authorized to receive change documents and is responsible for informing others in Contractor's employ or Subcontractors of changes to the Work.

B. Carefully study and compare Contract Documents before proceeding with fabrication and installation of Work. Promptly advise Architect/Engineer of any error, inconsistency, omission, or apparent discrepancy.

C. Requests for Interpretation (RFI) and Clarifications: Allot time in construction scheduling for liaison with Architect/Engineer; establish procedures for handling queries and clarifications.

1. Use CSI Form 13.2A - Request for Interpretation for requesting interpretations.
2. Architect/Engineer may respond with a direct answer on the Request for Interpretation form,, EJCDC C-942 - Field Order, or CSI Form 13/6A - Change Order Request (Proposal).

D. Architect/Engineer will advise of minor changes in the Work not involving adjustment to Contract Sum/Price or Contract Time by issuing supplemental instructions on EJCDC C-942.

E. Architect/Engineer may issue CSI Form 13/6A including a detailed description of proposed change with supplementary or revised Drawings and Specifications, a change in Contract Time for executing the change with stipulation of overtime work required and with the period of time during which the requested price will be considered valid. Contractor will prepare and submit estimate within 5 days.

F. Document requested substitutions according to Section 01 25 00 - Substitution Procedures.

G. Unit Price Change Order: For Contract unit prices and quantities, the Change Order will be executed on a fixed unit price basis. For unit costs or quantities of units of that which are not predetermined, execute Work under Work Directive Change. Changes in Contract Sum/Price or Contract Time will be computed as specified for Force Account Change Order.

H. Work Directive Change: Architect/Engineer may issue directive, on EJCDC C-940 - Work Change Directive signed by Owner, instructing Contractor to proceed with change in the Work, for subsequent inclusion in a Change Order. Document will describe changes in the Work and designate method of determining any change in Contract Sum/Price or Contract Time. Promptly execute change.

I. Force Account Change Order: Submit itemized account and supporting data after completion of change, within time limits indicated in Conditions of the Contract. Architect/Engineer will determine change allowable in Contract Sum/Price and Contract Time as provided in Contract Documents.

J. Maintain detailed records of Work done on force account basis. Provide full information required for evaluation of proposed changes and to substantiate costs for changes in the Work.

K. Document each quotation for change in Project Cost or Time with sufficient data to allow evaluation of quotation.

L. Change Order Forms: EJCDC C-941 - Change Order.

M. Execution of Change Orders: Architect/Engineer will issue Change Orders for signatures of parties as provided in Conditions of the Contract.

N. Correlation of Contractor Submittals:

1. Promptly revise Schedule of Values and Application for Payment forms to record each authorized Change Order as separate line item and adjust Contract Sum/Price.

2. Promptly revise Progress Schedules to reflect change in Contract Time, revise subschedules to adjust times for other items of Work affected by the change, and resubmit.
3. Promptly enter changes in Record Documents.

1.4 DEFECT ASSESSMENT

A. Replace the Work, or portions of the Work, not conforming to specified requirements.

B. If, in the opinion of Architect/Engineer, it is not practical to remove and replace the Work, Architect/Engineer will direct appropriate remedy or adjust payment.

C. The defective Work may remain, but unit sum/price will be adjusted to new sum/price at discretion of Architect/Engineer.

D. Defective Work will be partially repaired according to instructions of Architect/Engineer, and unit sum/price will be adjusted to new sum/price at discretion of Architect/Engineer.

E. Individual Specification Sections may modify these options or may identify specific formula or percentage sum/price reduction.

F. Authority of Architect/Engineer to assess defects and identify payment adjustments is final.

G. Nonpayment for Rejected Products: Payment will not be made for rejected products for any of the following reasons:

1. Products wasted or disposed of in a manner that is not acceptable.
2. Products determined as unacceptable before or after placement.
3. Products not completely unloaded from transporting vehicle.
4. Products placed beyond lines and levels of the required Work.
5. Products remaining on hand after completion of the Work.
6. Loading, hauling, and disposing of rejected products.

1.5 UNIT PRICES

A. Authority: Measurement methods are delineated in individual Specification Sections.

B. Measurement methods delineated in individual Specification Sections complement criteria of this Section. In event of conflict, requirements of individual Specification Section govern.

C. Take measurements and compute quantities. Architect/Engineer will verify measurements and quantities.

D. Unit Quantities: Quantities and measurements indicated on Bid Form are for Contract purposes only. Actual quantities provided shall determine payment.

1. When actual Work requires more or fewer quantities than those quantities indicated, provide required quantities at contracted unit sum/prices.
2. When actual Work requires 25 percent or greater change in quantity than those quantities indicated, Owner or Contractor may claim a Contract Price adjustment.

E. Payment Includes: Full compensation for required labor, products, tools, equipment, plant and facilities, transportation, services and incidentals; erection, application, or installation of item of the Work; overhead and profit.

F. Final payment for Work governed by unit prices will be made on basis of actual measurements and quantities accepted by Architect/Engineer multiplied by unit sum/price for Work incorporated in or made necessary by the Work.

G. Measurement of Quantities:

1. Weigh Scales: Inspected, tested, and certified by applicable State weights and measures department within past year.
2. Platform Scales: Of sufficient size and capacity to accommodate conveying vehicle.
3. Metering Devices: Inspected, tested, and certified by applicable State department within past year.
4. Measurement by Weight: Concrete reinforcing steel, rolled or formed steel, or other metal shapes will be measured by handbook weights. Welded assemblies will be measured by handbook or scale weight.
5. Measurement by Volume: Measured by cubic dimension using mean length, width, and height or thickness.
6. Measurement by Area: Measured by square dimension using mean length and width or radius.
7. Linear Measurement: Measured by linear dimension, at item centerline or mean chord.
8. Stipulated Sum/Price Measurement: Items measured by weight, volume, area, or linear means or combination, as appropriate, as completed item or unit of the Work.

PART 2 - PRODUCTS - Not Used

PART 3 - EXECUTION - Not Used

END OF SECTION 01 20 00

SECTION 01 25 00

SUBSTITUTION PROCEDURES

PART 1 - GENERAL

1.1 SECTION INCLUDES

A. Quality assurance.

B. Product options.

C. Product substitution procedures.

1.2 QUALITY ASSURANCE

A. Contract is based on products and standards established in Contract Documents without consideration of proposed substitutions.

B. Products specified define standard of quality, type, function, dimension, appearance, and performance required.

C. Substitution Proposals: Permitted for specified products except where specified otherwise. Do not substitute products unless substitution has been accepted and approved in writing by Owner.

1.3 PRODUCT OPTIONS

A. See Section 01 60 00 - Product Requirements.

1.4 PRODUCT SUBSTITUTION PROCEDURES

A. Architect/Engineer will consider requests for substitutions only within 15 days after date of Owner-Contractor Agreement.

B. Substitutions may be considered when a product becomes unavailable through no fault of Contractor.

C. Document each request with complete data, substantiating compliance of proposed substitution with Contract Documents, including:

1. Manufacturer's name and address, product, trade name, model, or catalog number, performance and test data, and reference standards.
2. Itemized point-by-point comparison of proposed substitution with specified product, listing variations in quality, performance, and other pertinent characteristics.
3. Reference to Article and Paragraph numbers in Specification Section.

4. Cost data comparing proposed substitution with specified product and amount of net change to Contract Sum.
5. Changes required in other Work.
6. Availability of maintenance service and source of replacement parts as applicable.
7. Certified test data to show compliance with performance characteristics specified.
8. Samples when applicable or requested.
9. Other information as necessary to assist Architect/Engineer's evaluation.

D. A request constitutes a representation that Contractor:

1. Has investigated proposed product and determined that it meets or exceeds quality level of specified product.
2. Will provide same warranty for substitution as for specified product.
3. Will coordinate installation and make changes to other Work that may be required for the Work to be complete with no additional cost to Owner.
4. Waives claims for additional costs or time extension that may subsequently become apparent.
5. Will coordinate installation of the accepted substitute, making such changes as may be required for the Work to be complete in all respects.
6. Will reimburse Owner for review or redesign services associated with reapproval by authorities having jurisdiction.

E. Substitutions will not be considered when they are indicated or implied on Shop Drawing or Product Data submittals without separate written request or when acceptance will require revision to Contract Documents.

F. Substitution Submittal Procedure:

1. Submit requests for substitutions on CSI Form 13.1A Substitution Request-After the Bidding/Negotiating Stage.
2. Submit, via email, a file in PDF format of Request for Substitution for consideration. Limit each request to one proposed substitution.
3. Submit Shop Drawings, Product Data, and certified test results attesting to proposed product equivalence. Burden of proof is on proposer.
4. Architect/Engineer will notify Contractor in writing of decision to accept or reject request.

PART 2 - PRODUCTS - Not Used

PART 3 - EXECUTION - Not Used

END OF SECTION 01 25 00

SECTION 01 30 00

ADMINISTRATIVE REQUIREMENTS

PART 1 - GENERAL

1.1 SECTION INCLUDES

A. Coordination and Project conditions.

B. Preconstruction meeting.

C. Site mobilization meeting.

D. Progress meetings.

E. Preinstallation meetings.

F. Closeout meeting.

G. Alteration procedures.

1.2 COORDINATION AND PROJECT CONDITIONS

A. Coordinate scheduling, submittals, and Work of various Sections of Project Manual to ensure efficient and orderly sequence of installation of interdependent construction elements, with provisions for accommodating items installed later.

B. Verify that utility requirements and characteristics of operating equipment are compatible with building utilities. Coordinate Work of various Sections having interdependent responsibilities for installing, connecting to, and placing operating equipment in service.

C. Coordination Meetings: In addition to other meetings specified in this Section, hold coordination meetings with personnel and Subcontractors to ensure coordination of Work.

D. Coordinate completion and clean-up of Work of separate Sections in preparation for Substantial Completion.

E. After Owner's occupancy of premises, coordinate access to Site for correction of defective Work and Work not complying with Contract Documents, to minimize disruption of Owner's activities.

1.3 PRECONSTRUCTION MEETING

A. Architect/Engineer will schedule and preside over meeting after Notice of Award.

B. Attendance Required: Architect/Engineer, Owner, major Subcontractors, and Contractor.

C. Minimum Agenda:
   1. Submission of executed bonds and insurance certificates.
   2. Distribution of Contract Documents.
   3. Submission of list of Subcontractors, list of products, schedule of values, and Progress Schedule.
   4. Designation of personnel representing parties in Contract and Architect/Engineer.
   5. Communication procedures.
   6. Procedures and processing of requests for interpretations, field decisions, field orders, submittals, substitutions, Applications for Payments, proposal request, Change Orders, and Contract closeout procedures.
   7. Scheduling.
   8. Critical Work sequencing.

D. Contractor: Record minutes and distribute copies to participants within two days after meeting, with two copies each to Architect/Engineer, Owner, and those affected by decisions made.

1.4 PROGRESS MEETINGS

A. Schedule and administer meetings throughout progress of the Work at maximum monthly intervals.

B. Architect/Engineer will make arrangements for meetings, prepare agenda with copies for participants, and preside over meetings.

C. Attendance Required: Job superintendent, major Subcontractors and suppliers, and Architect/Engineer, as appropriate to agenda topics for each meeting.

D. Minimum Agenda:

   1. Review minutes of previous meetings.
   2. Review of Work progress.
   3. Field observations, problems, and decisions.
   4. Identification of problems impeding planned progress.
   5. Review of submittal schedule and status of submittals.
   6. Review of off-Site fabrication and delivery schedules.
   7. Maintenance of Progress Schedule.
   8. Corrective measures to regain projected schedules.
   9. Planned progress during succeeding work period.
   10. Coordination of projected progress.
   11. Maintenance of quality and work standards.
   12. Effect of proposed changes on Progress Schedule and coordination.
   13. Other business relating to Work.

E. Contractor: Record minutes and distribute copies to participants within two days after meeting, with two copies each to Architect/Engineer, Owner, and those affected by decisions made.

1.5 CLOSEOUT MEETING

A. Schedule Project closeout meeting with sufficient time to prepare for requesting Substantial Completion. Preside over meeting and be responsible for minutes.

B. Attendance Required: Contractor, major Subcontractors, Architect/Engineer, Owner, and others appropriate to agenda.

C. Notify Architect/Engineer four days in advance of meeting date.

D. Minimum Agenda:

1. Contractor's inspection of Work.
2. Contractor's preparation of an initial "punch list."
3. Procedure to request Architect/Engineer inspection to determine date of Substantial Completion.
4. Completion time for correcting deficiencies.
5. Inspections by authorities having jurisdiction.
6. Final cleaning.
7. Preparation for final inspection.
8. Closeout Submittals:
9. Final Application for Payment.
10. Contractor's demobilization of Site.
11. Maintenance.

E. Record minutes and distribute copies to participants within two days after meeting, with two copies each to Architect/Engineer, Owner, and those affected by decisions made.

PART 2 - PRODUCTS - Not Used

PART 3 - EXECUTION – Not Used

END OF SECTION 01 30 00

SECTION 01 32 16

CONSTRUCTION PROGRESS SCHEDULE

PART 1 - GENERAL

1.1 SECTION INCLUDES

A. Submittals.

B. Review and evaluation.

C. Updating schedules.

D. Distribution.

1.2 SUBMITTALS

A. Within 10 days after date of Owner-Contractor Agreement, submit proposed preliminary network diagram defining planned operations for first 60 days of Work, with general outline for remainder of Work.

B. Participate in review of preliminary and complete network diagrams jointly with Architect/Engineer.

C. Within 20 days after joint review of proposed preliminary network diagram, submit draft of proposed complete network diagram for review. Include written certification that major Subcontractors have reviewed and accepted proposed schedule.

D. Within 10 days after joint review, submit complete network analysis consisting of network diagrams and mathematical analyses.

E. Submit updated network schedules with each Application for Payment.

F. Submit number of opaque reproductions Contractor requires, plus two copies Architect/Engineer will retain.

G. Submit network schedules under transmittal letter form specified in Section 01 33 00 - Submittal Procedures.

H. Schedule Updates:

1. Overall percent complete, projected and actual.
2. Completion progress by listed activity and subactivity, to within five working days prior to submittal.
3. Changes in Work scope and activities modified since submittal.
4. Delays in submittals or resubmittals, deliveries, or Work.
5. Adjusted or modified sequences of Work.

6. Other identifiable changes.
7. Revised projections of progress and completion.

I. Narrative Progress Report:

1. Submit with each monthly submission of Progress Schedule.
2. Summary of Work completed during the past period between reports.
3. Work planned during the next period.
4. Explanation of differences between summary of Work completed and Work planned in previously submitted report.
5. Current and anticipated delaying factors and estimated impact on other activities and completion milestones.
6. Corrective action taken or proposed.

1.3 REVIEW AND EVALUATION

A. Participate in joint review and evaluation of schedules with Architect/Engineer at each submittal.

B. Evaluate Project status to determine Work behind schedule and Work ahead of schedule.

C. After review, revise schedules incorporating results of review, and resubmit within 10 days.

1.4 UPDATING SCHEDULES

A. Maintain schedules to record actual start and finish dates of completed activities.

B. Indicate progress of each activity to date of revision, with projected completion date of each activity. Update schedules to depict current status of Work.

C. Identify activities modified since previous submittal, major changes in Work, and other identifiable changes.

D. Upon approval of a Change Order, include the change in the next schedule submittal.

E. Indicate changes required to maintain Date of Substantial Completion.

F. Submit sorts as required to support recommended changes.

G. Prepare narrative report to define problem areas, anticipated delays, and impact on schedule. Report corrective action taken or proposed and its effect.

1.5 DISTRIBUTION

A. Following joint review, distribute copies of updated schedules to Contractor's Project site file, to Subcontractors, suppliers, Architect/Engineer, Owner, and other concerned parties.

B. Instruct recipients to promptly report, in writing, problems anticipated by projections shown in schedules.

PART 2 - PRODUCTS - Not Used

PART 3 - EXECUTION - Not Used

END OF SECTION 01 32 16

SECTION 01 33 00

SUBMITTAL PROCEDURES

PART 1 - GENERAL

1.1 SECTION INCLUDES

A. Definitions.

B. Submittal procedures.

C. Construction progress schedules.

D. Proposed product list.

E. Product data.

F. Use of electronic CAD files of Project Drawings.

G. Shop Drawings.

H. Samples.

I. Other submittals.

J. Test reports.

K. Certificates.

L. Manufacturer's instructions.

M. Manufacturer's field reports.

N. Erection Drawings.

O. Contractor review.

P. Architect/Engineer review.

1.2 DEFINITIONS

A. Action Submittals: Written and graphic information and physical samples that require Architect/Engineer's responsive action.

B. Informational Submittals: Written and graphic information and physical Samples that do not require Architect/Engineer's responsive action. Submittals may be rejected for not complying with requirements.

1.3 SUBMITTAL PROCEDURES

A. Transmit each submittal with CSI Form 12.1A - Submittal Transmittal.

B. Sequentially number transmittal forms. Mark revised submittals with original number and sequential alphabetic suffix.

C. Identify: Project, Contractor, Subcontractor and supplier, pertinent Drawing and detail number, and Specification Section number appropriate to submittal.

D. Apply Contractor's stamp, signed or initialed, certifying that review, approval, verification of products required, field dimensions, adjacent construction Work, and coordination of information is according to requirements of the Work and Contract Documents.

E. Schedule submittals to expedite Project, and submit electronic submittals via email as PDF electronic files. Coordinate submission of related items.

F. For each submittal for review, allow 15 days excluding delivery time to and from Contractor.

G. Identify variations in Contract Documents and product or system limitations that may be detrimental to successful performance of completed Work.

H. Allow space on submittals for Contractor and Architect/Engineer review stamps.

I. When revised for resubmission, identify changes made since previous submission.

J. Distribute copies of reviewed submittals as appropriate. Instruct parties to promptly report inability to comply with requirements.

K. Submittals not requested will not be recognized nor processed.

L. Incomplete Submittals: Architect/Engineer will not review. Complete submittals for each item are required. Delays resulting from incomplete submittals are not the responsibility of Architect/Engineer.

1.4 CONSTRUCTION PROGRESS SCHEDULES

A. Comply with Section 01 32 16 - Construction Progress Schedule

1.5 PROPOSED PRODUCT LIST

A. Within 15 days after date of Owner-Contractor Agreement, submit list of major products proposed for use, with name of manufacturer, trade name, and model number of each product.

B. For products specified only by reference standards, indicate manufacturer, trade name, model or catalog designation, and reference standards.

1.6 PRODUCT DATA

A. Product Data: Action Submittal: Submit to Architect/Engineer for review for assessing conformance with information given and design concept expressed in Contract Documents.

B. Submit electronic submittals via email as PDF electronic files.

C. Mark each copy to identify applicable products, models, options, and other data. Supplement manufacturers' standard data to provide information specific to this Project.

D. Indicate product utility and electrical characteristics, utility connection requirements, and location of utility outlets for service for functional equipment and appliances.

E. After review, produce copies and distribute according to "Submittal Procedures" Article and for record documents described in Section 01 70 00 - Execution and Closeout Requirements.

1.7 ELECTRONIC CAD FILES OF PROJECT DRAWINGS

A. Electronic CAD Files of Project Drawings: May only be used to expedite production of Shop Drawings for the Project. Use for other Projects or purposes is not allowed.

B. Electronic CAD Files of Project Drawings: Distributed only under the following conditions:

1. Use of files is solely at receiver's risk. Architect/Engineer does not warrant accuracy of files. Receiving files in electronic form does not relieve receiver of responsibilities for measurements, dimensions, and quantities set forth in Contract Documents. In the event of ambiguity, discrepancy, or conflict between information on electronic media and that in Contract Documents, notify Architect/Engineer of discrepancy and use information in hard-copy Drawings and Specifications.
2. CAD files do not necessarily represent the latest Contract Documents, existing conditions, and as-built conditions. Receiver is responsible for determining and complying with these conditions and for incorporating addenda and modifications.
3. User is responsible for removing information not normally provided on Shop Drawings and removing references to Contract Documents. Shop Drawings submitted with information associated with other trades or with references to Contract Documents will not be reviewed and will be immediately returned.
4. Receiver shall not hold Architect/Engineer responsible for data or file clean-up required to make files usable, nor for error or malfunction in translation, interpretation, or use of this electronic information.
5. Receiver shall understand that even though Architect/Engineer has computer virus scanning software to detect presence of computer viruses, there is no guarantee that computer viruses are not present in files or in electronic media.
6. Receiver shall not hold Architect/Engineer responsible for such viruses or their consequences, and shall hold Architect/Engineer harmless against costs, losses, or damage caused by presence of computer virus in files or media.

1.8 SHOP DRAWINGS

A. Shop Drawings: Action Submittal: Submit to Architect/Engineer for assessing conformance with information given and design concept expressed in Contract Documents.

B. Indicate special utility and electrical characteristics, utility connection requirements, and location of utility outlets for service for functional equipment and appliances.

C. When required by individual Specification Sections, provide Shop Drawings signed and sealed by a professional Engineer responsible for designing components shown on Shop Drawings.

1. Include signed and sealed calculations to support design.
2. Submit Shop Drawings and calculations in form suitable for submission to and approval by authorities having jurisdiction.
3. Make revisions and provide additional information when required by authorities having jurisdiction.

D. Submit electronic submittals via email as PDF electronic files.

E. After review, produce copies and distribute according to "Submittal Procedures" Article and for record documents described in Section 01 70 00 - Execution and Closeout Requirements.

1.9 SAMPLES

A. Samples: Action Submittal: Submit to Architect/Engineer for assessing conformance with information given and design concept expressed in Contract Documents.

B. Samples for Selection as Specified in Product Sections:

1. Submit to Architect/Engineer for aesthetic, color, and finish selection.
2. Submit Samples of finishes, textures, and patterns for Architect/Engineer selection.

C. Submit Samples to illustrate functional and aesthetic characteristics of products, with integral parts and attachment devices. Coordinate Sample submittals for interfacing work.

D. Include identification on each Sample, with full Project information.

E. Submit number of Samples specified in individual Specification Sections; Architect/Engineer will retain one Sample.

F. Reviewed Samples that may be used in the Work are indicated in individual Specification Sections.

G. Samples will not be used for testing purposes unless specifically stated in Specification Section.

H. After review, produce copies and distribute according to "Submittal Procedures" Article and for record documents described in Section 01 70 00 - Execution and Closeout Requirements.

1.10 OTHER SUBMITTALS

A. Closeout Submittals: Comply with Section 01 70 00 - Execution and Closeout Requirements.

B. Informational Submittal: Submit data for Architect/Engineer's knowledge as Contract administrator or for Owner.

C. Submit information for assessing conformance with information given and design concept expressed in Contract Documents.

1.11 TEST REPORTS

A. Informational Submittal: Submit reports for Architect/Engineer's knowledge as Contract administrator or for Owner.

B. Submit test reports for information for assessing conformance with information given and design concept expressed in Contract Documents.

1.12 CERTIFICATES

A. Informational Submittal: Submit certification by manufacturer, installation/application Subcontractor, or Contractor to Architect/Engineer, in quantities specified for Product Data.

B. Indicate material or product conforms to or exceeds specified requirements. Submit supporting reference data, affidavits, and certifications as appropriate.

C. Certificates may be recent or previous test results on material or product but must be acceptable to Architect/Engineer.

1.13 MANUFACTURER'S INSTRUCTIONS

A. Informational Submittal: Submit manufacturer's installation instructions for Architect/Engineer's knowledge as Contract administrator or for Owner.

B. Submit printed instructions for delivery, storage, assembly, installation, adjusting, and finishing, to Architect/Engineer in quantities specified for Product Data.

C. Indicate special procedures, perimeter conditions requiring special attention, and special environmental criteria required for application or installation.

1.14 MANUFACTURER'S FIELD REPORTS

A. Informational Submittal: Submit reports for Architect/Engineer's knowledge as Contract administrator or for Owner.

B. Submit report within 5 days of observation to Architect/Engineer for information.

C. Submit reports for information for assessing conformance with information given and design concept expressed in Contract Documents.

1.15 ERECTION DRAWINGS

A. Informational Submittal: Submit Drawings for Architect/Engineer's knowledge as Contract administrator or for Owner.

B. Submit Drawings for information assessing conformance with information given and design concept expressed in Contract Documents.

C. Data indicating inappropriate or unacceptable Work may be subject to action by Architect/Engineer or Owner.

1.16 CONTRACTOR REVIEW

A. Review for compliance with Contract Documents and approve submittals before transmitting to Architect/Engineer.

B. Contractor: Responsible for:

1. Determination and verification of materials including manufacturer's catalog numbers.
2. Determination and verification of field measurements and field construction criteria.
3. Checking and coordinating information in submittal with requirements of Work and of Contract Documents.
4. Determination of accuracy and completeness of dimensions and quantities.
5. Confirmation and coordination of dimensions and field conditions at Site.
6. Construction means, techniques, sequences, and procedures.
7. Safety precautions.
8. Coordination and performance of Work of all trades.

C. Stamp, sign or initial, and date each submittal to certify compliance with requirements of Contract Documents.

D. Do not fabricate products or begin Work for which submittals are required until approved submittals have been received from Architect/Engineer.

1.17 ARCHITECT/ENGINEER REVIEW

A. Do not make "mass submittals" to Architect/Engineer. "Mass submittals" are defined as six or more submittals or items in one day or 15 or more submittals or items in one week. If "mass submittals" are received, Architect/Engineer's review time stated above will be extended as necessary to perform proper review. Architect/Engineer will review "mass submittals" based on priority determined by Architect/Engineer after consultation with Owner and Contractor.

B. Informational submittals and other similar data are for Architect/Engineer's information, do not require Architect/Engineer's responsive action, and will not be reviewed or returned with comment.

C. Submittals made by Contractor that are not required by Contract Documents may be returned without action.

D. Submittal approval does not authorize changes to Contract requirements unless accompanied by Change Order, Field Order, or Work Change Directive.

PART 2 - PRODUCTS - Not Used

PART 3 - EXECUTION - Not Used

END OF SECTION 01 33 00

SECTION 01 40 00

QUALITY REQUIREMENTS

PART 1 - GENERAL

1.1 SECTION INCLUDES

A. Quality control.

B. Tolerances.

C. References.

D. Labeling.

E. Mockup requirements.

F. Testing and inspection services.

G. Manufacturers' field services.

1.2 QUALITY CONTROL

A. Monitor quality control over suppliers, manufacturers, products, services, Site conditions, and workmanship, to produce Work of specified quality.

B. Comply with specified standards as the minimum quality for the Work except where more stringent tolerances, codes, or specified requirements indicate higher standards or more precise workmanship.

C. Perform Work using persons qualified to produce required and specified quality.

D. Products, materials, and equipment may be subject to inspection by Architect/Engineer and Owner at place of manufacture or fabrication. Such inspections shall not relieve Contractor of complying with requirements of Contract Documents.

E. Supervise performance of Work in such manner and by such means to ensure that Work, whether completed or in progress, will not be subjected to harmful, dangerous, damaging, or otherwise deleterious exposure during construction period.

1.3 TOLERANCES

A. Monitor fabrication and installation tolerance control of products to produce acceptable Work. Do not permit tolerances to accumulate.

B. Comply with manufacturers' recommended tolerances and tolerance requirements in reference standards. When such tolerances conflict with Contract Documents, request clarification from Architect/Engineer before proceeding.

C. Adjust products to appropriate dimensions; position before securing products in place.

1.4 REFERENCES

A. For products or workmanship specified by association, trade, or other consensus standards, comply with requirements of standard except when more rigid requirements are specified or are required by applicable codes.

B. Conform to reference standard by date of issue current as of date of Contract Documents except where specific date is established by code.

C. Obtain copies of standards and maintain on Site when required by product Specification Sections.

D. When requirements of indicated reference standards conflict with Contract Documents, request clarification from Architect/Engineer before proceeding.

E. Neither contractual relationships, duties, or responsibilities of parties in Contract nor those of Architect/Engineer shall be altered from Contract Documents by mention or inference in reference documents.

1.5 LABELING

A. Attach label from agency approved by authorities having jurisdiction for products, assemblies, and systems required to be labeled by applicable code.

B. Label Information: Include manufacturer's or fabricator's identification, approved agency identification, and the following information, as applicable, on each label:

1. Model number.
2. Serial number.
3. Performance characteristics.

C. Manufacturer's Nameplates, Trademarks, Logos, and Other Identifying Marks on Products: Not allowed on surfaces exposed to view in public areas, interior or exterior.

1.6 MOCK-UP REQUIREMENTS

A. Tests will be performed under provisions identified in this Section and identified in individual product Specification Sections.

B. Assemble and erect specified or indicated items with specified or indicated attachment and anchorage devices, flashings, seals, and finishes.

C. Accepted mockups shall be comparison standard for remaining Work.

D. Where mockup has been accepted by Architect/Engineer and is specified in product Specification Sections to be removed, remove mockup and clear area when directed to do so by Architect/Engineer.

1.7 TESTING AND INSPECTION SERVICES

A. Owner will employ and pay for specified services of an independent firm to perform testing and inspection.

B. Independent firm will perform tests, inspections, and other services specified in individual Specification Sections and as required by authorities having jurisdiction.

1. Laboratory: Authorized to operate in State of Michigan.
2. Laboratory Staff: Maintain full-time Professional Engineer on staff to review services.
3. Testing Equipment: Calibrated at reasonable intervals with devices of an accuracy traceable to National Bureau of Standards or accepted values of natural physical constants.

C. Testing, inspections, and source quality control may occur on or off Project Site. Perform off-Site testing as required by Architect/Engineer or Owner.

D. Reports shall be submitted by independent firm to Architect/Engineer, Contractor, and authorities having jurisdiction, in duplicate, indicating observations and results of tests and compliance or noncompliance with Contract Documents.

1. Submit final report indicating correction of Work previously reported as noncompliant.

E. Cooperate with independent firm; furnish samples of materials, design mix, equipment, tools, storage, safe access, and assistance by incidental labor as requested.

1. Notify Architect/Engineer and independent firm 48 hours before expected time for operations requiring services.
2. Make arrangements with independent firm and pay for additional Samples and tests required for Contractor's use.

F. Employment of testing agency or laboratory shall not relieve Contractor of obligation to perform Work according to requirements of Contract Documents.

G. Retesting or re-inspection required because of nonconformance with specified or indicated requirements shall be performed by same independent firm on instructions from Architect/Engineer. Payment for retesting or re-inspection will be charged to Contractor by deducting testing charges from Contract Sum/Price.

H. Agency Responsibilities:

1. Test Samples of mixes submitted by Contractor.
2. Provide qualified personnel at Site. Cooperate with Architect/Engineer and Contractor in performance of services.
3. Perform indicated sampling and testing of products according to specified standards.
4. Ascertain compliance of materials and mixes with requirements of Contract Documents.

5. Promptly notify Architect/Engineer and Contractor of observed irregularities or nonconformance of Work or products.
6. Perform additional tests required by Architect/Engineer.
7. Attend preconstruction meetings and progress meetings.

I. Agency Reports: After each test, promptly submit two copies of report to Architect/Engineer, Contractor, and authorities having jurisdiction. When requested by Architect/Engineer, provide interpretation of test results. Include the following:

1. Date issued.
2. Project title and number.
3. Name of inspector.
4. Date and time of sampling or inspection.
5. Identification of product and Specification Section.
6. Location in Project.
7. Type of inspection or test.
8. Date of test.
9. Results of tests.
10. Conformance with Contract Documents.

J. Limits on Testing Authority:

1. Agency or laboratory may not release, revoke, alter, or enlarge on requirements of Contract Documents.
2. Agency or laboratory may not approve or accept any portion of the Work.
3. Agency or laboratory may not assume duties of Contractor.
4. Agency or laboratory has no authority to stop the Work.

1.8 MANUFACTURER'S FIELD SERVICES

A. When specified in individual Specification Sections, require material or product suppliers or manufacturers to provide qualified staff personnel to observe Site conditions, conditions of surfaces and installation, and quality of workmanship, as applicable, and to initiate instructions when necessary.

B. Submit qualifications of observer to Architect/Engineer 30 days in advance of required observations. Observer is subject to approval of Architect/Engineer.

C. Report observations and Site decisions or instructions given to applicators or installers that are supplemental or contrary to manufacturer's written instructions.

D. Refer to Section 01 33 00 - Submittal Procedures, "Manufacturer's Field Reports" Article.

PART 2 - PRODUCTS - Not Used

PART 3 - EXECUTION - Not Used

END OF SECTION 01 40 00

SECTION 01 50 00

TEMPORARY FACILITIES AND CONTROLS

PART 1 - GENERAL

1.1 SECTION INCLUDES

A. Temporary Utilities:

1. Temporary electricity.

B. Construction Facilities:
1. Vehicular access.
2. Parking.
3. Progress cleaning and waste removal.
4. Traffic regulation.

C. Temporary Controls:

1. Barriers.
2. Enclosures and fencing.
3. Security.
4. Water control.
5. Dust control.
6. Erosion and sediment control.
7. Noise control.

1.2 REFERENCES

A. ASTM International:

1. ASTM E 84 - Standard Test Method for Surface Burning Characteristics of Building Materials.
2. ASTM E 90 - Standard Test Method for Laboratory Measurement of Airborne Sound Transmission Loss of Building Partitions and Elements.
3. ASTM E 119 - Standard Test Methods for Fire Tests of Building Construction and Materials.

1.3 TEMPORARY ELECTRICITY

A. Provide and pay for power service required from utility source as needed for construction operation.

B. Complement existing power service capacity and characteristics as required for construction operations.

1.4 PARKING

A. If Site space is not adequate, provide additional off-Site parking.

B. Permanent Pavements and Parking Facilities:
   1. Avoid traffic loading beyond paving design capacity. Tracked vehicles are not allowed.

C. Maintenance:

   1. Maintain traffic and parking areas in sound condition free of excavated material, construction equipment, products, mud, snow, ice, and the like.
   2. Maintain existing and permanent paved areas used for construction; promptly repair breaks, potholes, low areas, standing water, and other deficiencies, to maintain paving and drainage in original condition.

D. Mud from Site vehicles: Provide means of removing mud from vehicle wheels before entering streets.

1.5 PROGRESS CLEANING AND WASTE REMOVAL

A. Maintain areas free of waste materials, debris, and rubbish. Maintain Site in clean and orderly condition.

B. Collect and remove waste materials, debris, and rubbish from Site periodically and dispose of off-Site.

1.6 TRAFFIC REGULATION

A. Signs, Signals, and Devices:

   1. Post-Mounted and Wall-Mounted Traffic Control and Informational Signs: As approved by authorities having jurisdiction.
   2. Traffic Cones, Drums, Flares, and Lights: As approved by authorities having jurisdiction.
   3. Flag Person Equipment: As required by authorities having jurisdiction.

B. Flag Persons: Provide trained and equipped flag persons to regulate traffic when construction operations or traffic encroach on public traffic lanes.

C. Haul Routes:

   1. Consult with authorities having jurisdiction and establish public thoroughfares to be used for haul routes and Site access.
   2. Confine construction traffic to designated haul routes.
   3. Provide traffic control at critical areas of haul routes to regulate traffic and to minimize interference with public traffic.

D. Traffic Signs and Signals:

   1. Provide signs at approaches to Site and on Site, at crossroads, detours, parking areas, and elsewhere as needed to direct construction and affected public traffic.

2. Relocate signs and signals as Work progresses, to maintain effective traffic control.

E. Removal:

1. Remove equipment and devices when no longer required.
2. Repair damage caused by installation.
3. Remove post settings to depth of 2 feet.

1.7 BARRIERS

A. Provide barriers to prevent unauthorized entry to construction areas, to allow for Owner's use of Site, and to protect existing facilities and adjacent properties from damage from construction operations and demolition.

B. Tree and Plant Protection: Preserve and protect existing trees and plants designated to remain.

1. Protect areas within drip lines from traffic, parking, storage, dumping, chemically injurious materials and liquids, ponding, and continuous running water.
2. Replace trees and plants damaged by construction operations.

C. Protect non-owned vehicular traffic, stored materials, Site, and structures from damage.

1.8 ENCLOSURES AND FENCING

A. Construction: Contractor's option.

B. Exterior Enclosures: Contractor’s option

1.9 SECURITY

A. Security Program:

1. Protect Work on existing premises from theft, vandalism, and unauthorized entry.

1.10 WATER CONTROL

A. Grade Site to drain. Maintain excavations free of water. Provide, operate, and maintain necessary pumping equipment.

1.11 DUST CONTROL

A. Execute Work by methods that minimize raising dust from construction operations.

B. Provide positive means to prevent airborne dust from dispersing into atmosphere.

1.12 EROSION AND SEDIMENT CONTROL

A. Plan and execute construction by methods to control surface drainage from cuts and fills from borrow and waste disposal areas. Prevent erosion and sedimentation.

B. Minimize surface area of bare soil exposed at one time.

C. Provide temporary measures including berms, dikes, drains, and other devices to prevent water flow.

D. Construct fill and waste areas by selective placement to avoid erosive surface silts and clays.

E. Periodically inspect earthwork to detect evidence of erosion and sedimentation. Promptly apply corrective measures.

1.13 NOISE CONTROL

A. Provide methods, means, and facilities to minimize noise produced by construction operations.

PART 2 - PRODUCTS - Not Used

PART 3 - EXECUTION - Not Used

END OF SECTION 01 50 00

SECTION 01 60 00

PRODUCT REQUIREMENTS

PART 1 - GENERAL

1.1 SECTION INCLUDES

A. Products.

B. Product delivery requirements.

C. Product storage and handling requirements.

D. Product options.

E. Equipment electrical characteristics and components.

1.2 PRODUCTS

A. At minimum, comply with specified requirements and reference standards.

B. Specified products define standard of quality, type, function, dimension, appearance, and performance required.

C. Furnish products of qualified manufacturers that are suitable for intended use. Furnish products of each type by single manufacturer unless specified otherwise. Confirm that manufacturer's production capacity can provide sufficient product, on time, to meet Project requirements.

D. Do not use materials and equipment removed from existing premises except as specifically permitted by Contract Documents.

E. Furnish interchangeable components from same manufacturer for components being replaced.

1.3 PRODUCT DELIVERY REQUIREMENTS

A. Comply with delivery requirements in Section 01 74 19 - Construction Waste Management and Disposal.

B. Transport and handle products according to manufacturer's instructions.

C. Promptly inspect shipments to ensure products comply with requirements, quantities are correct, and products are undamaged.

D. Provide equipment and personnel to handle products; use methods to prevent soiling, disfigurement, or damage.

1.4 PRODUCT STORAGE AND HANDLING REQUIREMENTS

A. Store and protect products according to manufacturer's instructions.

B. Store products with seals and labels intact and legible.

C. Store sensitive products in weathertight, climate-controlled enclosures in an environment suitable to product.

D. For exterior storage of fabricated products, place products on sloped supports aboveground.

E. Provide off-Site storage and protection when Site does not permit on-Site storage or protection.

F. Cover products subject to deterioration with impervious sheet covering. Provide ventilation to prevent condensation and degradation of products.

G. Store loose granular materials on solid flat surfaces in well-drained area. Prevent mixing with foreign matter.

H. Provide equipment and personnel to store products; use methods to prevent soiling, disfigurement, or damage.

I. Arrange storage of products to permit access for inspection. Periodically inspect to verify products are undamaged and are maintained in acceptable condition.

1.5 PRODUCT OPTIONS

A. Products Specified by Reference Standards or by Description Only: Products complying with specified reference standards or description.

B. Products Specified by Naming One or More Manufacturers: Products of one of manufacturers named and complying with Specifications; no options or substitutions allowed.

C. Products Specified by Naming One or More Manufacturers with Provision for Substitutions: Submit Request for Substitution for any manufacturer not named, according to Section 01 25 00 - Substitution Procedures.

PART 2 - PRODUCTS – Not Used

PART 3 - EXECUTION - Not Used

END OF SECTION 01 60 00

SECTION 01 70 00

EXECUTION AND CLOSEOUT REQUIREMENTS

PART 1 - GENERAL

1.1 SECTION INCLUDES

A. Field engineering.

B. Closeout procedures.

C. Manual for equipment and systems.

D. Product warranties and product bonds.

E. Examination.

F. Preparation.

G. Execution.

H. Protecting installed construction.

I. Final cleaning.

1.2 FIELD ENGINEERING

A. Owner will locate and Contractor shall protect survey control and reference points. Promptly notify Architect/Engineer of discrepancies discovered.

B. Control datum for survey is indicated on Drawings.

C. Verify setbacks and easements; confirm Drawing dimensions and elevations.

D. Provide field engineering services. Establish elevations, lines, and levels using recognized engineering survey practices.

E. Maintain complete and accurate log of control and survey Work as Work progresses.

F. Protect survey control points prior to starting Site Work; preserve permanent reference points during construction.

G. Promptly report to Architect/Engineer loss or destruction of reference point or relocation required because of changes in grades or other reasons.

H. Replace dislocated survey control points based on original survey control. Make no changes without prior written notice to Architect/Engineer.

1.3 CLOSEOUT PROCEDURES

A. Prerequisites to Substantial Completion: Complete following items before requesting Certification of Substantial Completion, either for entire Work or for portions of Work:

1. Submit maintenance manuals, Project record documents, and other similar final record data in compliance with this Section.
2. Complete facility startup, testing, adjusting, balancing of systems and equipment, demonstrations, and instructions to Owner's operating and maintenance personnel as specified in compliance with this Section.
3. Conduct inspection to establish basis for request that Work is substantially complete. Create comprehensive list (initial punch list) indicating items to be completed or corrected, value of incomplete or nonconforming Work, reason for being incomplete, and date of anticipated completion for each item. Include copy of list with request for Certificate of Substantial Completion.
4. Obtain and submit releases enabling Owner's full, unrestricted use of Project and access to services and utilities. Include certificate of occupancy, operating certificates, and similar releases from authorities having jurisdiction and utility companies.
5. Deliver tools, spare parts, extra stocks of material, and similar physical items to Owner.
6. Discontinue or change over and remove temporary facilities and services from Project Site, along with construction tools, mockups, and similar elements.
7. Perform final cleaning according to this Section.

B. Substantial Completion Inspection:

1. When Contractor considers Work to be substantially complete, submit to Architect/Engineer:

    a. Written certificate that Work, or designated portion, is substantially complete.
    b. List of items to be completed or corrected (initial punch list).

2. Within seven days after receipt of request for Substantial Completion, Architect/Engineer will make inspection to determine whether Work or designated portion is substantially complete.
3. Should Architect/Engineer determine that Work is not substantially complete:

    a. Architect/Engineer will promptly notify Contractor in writing, stating reasons for its opinion.
    b. Contractor shall remedy deficiencies in Work and send second written request for Substantial Completion to Architect/Engineer.
    c. Architect/Engineer will reinspect Work.
    d. Redo and Inspection of Deficient Work: Repeated until Work passes Architect/Engineer's inspection.

4. When Architect/Engineer finds that Work is substantially complete, Architect/Engineer will:

    a. Prepare Certificate of Substantial Completion on EJCDC C-625 - Certificate of Substantial Completion, accompanied by Contractor's list of items to be completed or corrected as verified and amended by Architect/Engineer and Owner (final punch list).

b. Submit Certificate to Owner and Contractor for their written acceptance of responsibilities assigned to them in Certificate.

5. After Work is substantially complete, Contractor shall:

a. Allow Owner occupancy of Project under provisions stated in Certificate of Substantial Completion.
b. Complete Work listed for completion or correction within time period stipulated.

C. Prerequisites for Final Completion: Complete following items before requesting final acceptance and final payment.

1. When Contractor considers Work to be complete, submit written certification that:

a. Contract Documents have been reviewed.
b. Work has been examined for compliance with Contract Documents.
c. Work has been completed according to Contract Documents.
d. Work is completed and ready for final inspection.

2. Submittals: Submit following:

a. Final punch list indicating all items have been completed or corrected.
b. Final payment request with final releases and supporting documentation not previously submitted and accepted. Include certificates of insurance for products and completed operations where required.
c. Specified warranties, workmanship/maintenance bonds, maintenance agreements, and other similar documents.
d. Accounting statement for final changes to Contract Sum.

3. Perform final cleaning for Contractor-soiled areas according to this Section.

D. Final Completion Inspection:

1. Within seven days after receipt of request for final inspection, Architect/Engineer will make inspection to determine whether Work or designated portion is complete.
2. Should Architect/Engineer consider Work to be incomplete or defective:

a. Architect/Engineer will promptly notify Contractor in writing, listing incomplete or defective Work.
b. Contractor shall remedy stated deficiencies and send second written request to Architect/Engineer that Work is complete.
c. Architect/Engineer will reinspect Work.
d. Redo and Inspection of Deficient Work: Repeated until Work passes Architect/Engineer's inspection.

1.4 MANUAL FOR EQUIPMENT AND SYSTEMS

A. Submit two copies of preliminary draft or proposed formats and outlines of contents before start of Work. Architect/Engineer will review draft and return one copy with comments.

B. For equipment, or component parts of equipment put into service during construction and operated by Owner, submit documents within ten days after acceptance.

C. Submit one copy of completed volumes before Substantial Completion. Draft copy will be reviewed and returned after Substantial Completion, with Architect/Engineer comments. Revise content of document sets as required prior to final submission.

D. Submit in PDF composite electronic indexed file of final manual within ten days after final inspection.

E. Maintenance Requirements: Include routine procedures and guide for preventative maintenance and troubleshooting; disassembly, repair, and reassembly instructions; and alignment, adjusting, balancing, and checking instructions.

1.5 PRODUCT WARRANTIES AND PRODUCT BONDS

A. Obtain warranties and bonds executed in duplicate by responsible Subcontractors, suppliers, and manufacturers within ten days after completion of applicable item of Work.

B. Execute and assemble transferable warranty documents and bonds from Subcontractors, suppliers, and manufacturers.

C. Verify documents are in proper form, contain full information, and are notarized.

D. Co-execute submittals when required.

E. Submit prior to final Application for Payment.

F. Time of Submittals:

1. For equipment or component parts of equipment put into service during construction with Owner's permission, submit documents within ten days after acceptance.
2. Make other submittals within ten days after date of Substantial Completion, prior to final Application for Payment.
3. For items of Work for which acceptance is delayed beyond Substantial Completion, submit within ten days after acceptance, listing date of acceptance as beginning of warranty or bond period.

PART 2 - PRODUCTS - Not Used

PART 3 - EXECUTION

3.1 EXAMINATION

A. Verify that existing Site conditions and substrate surfaces are acceptable for subsequent Work. Beginning new Work means acceptance of existing conditions.

B. Verify that existing substrate is capable of structural support or attachment of new Work being applied or attached.

C. Examine and verify specific conditions described in individual Specification Sections.

D. Verify that utility services are available with correct characteristics and in correct locations.

3.2 PREPARATION

A. Clean substrate surfaces prior to applying next material or substance according to manufacturer's instructions.

B. Seal cracks or openings of substrate prior to applying next material or substance.

C. Apply manufacturer-required or -recommended substrate primer, sealer, or conditioner prior to applying new material or substance in contact or bond.

3.3 EXECUTION

A. Comply with manufacturer's installation instructions, performing each step in sequence. Maintain one set of manufacturer's installation instructions at Project Site during installation and until completion of construction.

B. When manufacturer's installation instructions conflict with Contract Documents, request clarification from Architect/Engineer before proceeding.

C. Verify that field measurements are as indicated on approved Shop Drawings or as instructed by manufacturer.

D. Secure products in place with positive anchorage devices designed and sized to withstand stresses, vibration, physical distortion, or disfigurement.

1. Secure Work true to line and level and within specified tolerances, or if not specified, industry-recognized tolerances.
2. Physically separate products in place, provide electrical insulation, or provide protective coatings to prevent galvanic action or corrosion between dissimilar metals.
3. Exposed Joints: Provide uniform joint width and arrange to obtain best visual effect. Refer questionable visual-effect choices to Architect/Engineer for final decision.

E. Allow for expansion of materials and building movement.

F. Climatic Conditions and Project Status: Install each unit of Work under conditions to ensure best possible results in coordination with entire Project.

1. Isolate each unit of Work from incompatible Work as necessary to prevent deterioration.
2. Coordinate enclosure of Work with required inspections and tests to minimize necessity of uncovering Work for those purposes.

G. Mounting Heights: Where not indicated, mount individual units of Work at industry recognized standard mounting heights for particular application indicated.

1. Refer questionable mounting heights choices to Architect/Engineer for final decision.
2. Elements Identified as Accessible to Handicapped: Comply with applicable codes and regulations.

H. Adjust operating products and equipment to ensure smooth and unhindered operation.

I. Clean and perform maintenance on installed Work as frequently as necessary through remainder of construction period. Lubricate operable components as recommended by manufacturer.

3.4 PROTECTING INSTALLED CONSTRUCTION

A. Protect installed Work and provide special protection where specified in individual Specification Sections.

B. Provide temporary and removable protection for installed products. Control activity in immediate Work area to prevent damage.

C. Provide protective coverings at walls, projections, jambs, sills, and soffits of openings.

D. Use durable sheet materials to protect finished floors, stairs, and other surfaces from traffic, dirt, wear, damage, or movement of heavy objects.

E. Prohibit traffic or storage upon waterproofed or roofed surfaces. When traffic or activity is necessary, obtain recommendations for protection from waterproofing or roofing material manufacturer.

F. Prohibit traffic from landscaped areas.

3.5 FINAL CLEANING

A. Execute final cleaning prior to final Project assessment.

1. Employ experienced personnel or professional cleaning firm.

B. Clean Site; sweep paved areas, rake clean landscaped surfaces.

C. Remove waste and surplus materials, rubbish, and construction facilities from Site.

END OF SECTION 01 70 00

SECTION 11 68 23.33

TENNIS AND PICKLEBALL EQUIPMENT

PART 1 - GENERAL

1.1 SUMMARY

A. Section Includes:
   1. Pre-Manufactured Equipment – Tennis and Pickleball Court Nets and Posts

1.2 SUBMITTALS

A. Furnish complete product information for all recreational facility items for the project to Engineer for approval.

B. Submit product data and shop drawings for approval.

1.3 UNIT PRICE – MEASUREMENT AND PAYMENT

A. Tennis Court Equipment
   1. Basis of Measurement: By Each
   2. Basis of Payment: Includes all associate labor, materials, freight, delivery, equipment, and assembly for a complete installation of the specified tennis equipment. Includes excavation, pavement coring, grading, formwork, concrete, finishing.

B. Pickleball Court Equipment
   1. Basis of Measurement: By Each
   2. Basis of Payment: Includes all associate labor, materials, freight, delivery, equipment, and assembly for a complete installation of the specified tennis equipment. Includes excavation, pavement coring, grading, formwork, concrete, finishing.

PART 2 - PRODUCTS

2.1 TENNIS COURT MATERIALS

A. Manufacturer: Douglas Sports Equipment
   1. Tennis Nets: TN-30DM
   2. Center Strap: #20600
   3. Center Strap Ground Anchor: #63428
   4. Posts: Premier RD

2.2 PICKLEBALL COURT MATERIALS

A. Manufacturer: Douglas Sports Equipment
   1. Pickleball Nets: JTN-30
   2. Posts: Premier RD

2.3 CONCRETE FOR POSTS

A. Follow recommendation of post manufacturer

B. Submit material and product data to Engineer for review prior to use.

PART 3 - EXECUTION

3.1 PREPARATION

A. Review all manufacturer installation guidelines and recommendations

3.2 STORAGE

A. All equipment shall be stored in original manufacturer containers and protected from construction conditions, weather, theft, and vandalism until time of installation

3.3 INSTALLATION

A. Assemble equipment components according to manufacturer instructions, installation guidelines, and recommendations

B. Replace all damaged components prior to final acceptance.

C. Finish according to specific use requirements.

END OF SECTION 11 68 23.33

SECTION 31 05 13

SOILS FOR EARTHWORK

PART 1 - GENERAL

1.1 SUMMARY

A. Section Includes:
   1. Topsoil materials.

B. Related Requirements:

   1. Section 31 05 16 – Aggregates for Earthwork
   2. Section 31 23 16 – Excavation
   3. Section 31 23 23 – Fill
   4. Section 32 91 19 – Landscape Grading
   5. Section 32 92 19 – Seeding

1.2 SUBMITTALS

A. Section 01 33 00 - Submittal Procedures: Requirements for submittals.

B. Product Data: Submit name of imported materials source.

C. Supplier's Certificate: Certify that products meet or exceed specified requirements.

1.3 QUALITY ASSURANCE

A. Furnish each subsoil and topsoil material from single source throughout Work.

B. Perform Work according to Michigan Department of Transportation standards.

PART 2 - PRODUCTS

2.1 MATERIALS

A. Topsoil:

   1. Comply with Michigan Department of Transportation standard.

2.2 SOURCE QUALITY CONTROL

A. Section 01 40 00 - Quality Requirements: Requirements for testing, inspection, and analysis.

B. Owner Inspection:

1. Make topsoil available for inspection at source prior to packaging for shipment.
2. Notify Owner at least seven days before inspection is allowed.

C. Owner Witnessing:

1. Allow witnessing of source testing at supplier's test facility.
2. Notify Owner at least seven days before tests are scheduled.

D. Certificate of Compliance:

1. If supplier is approved by authorities having jurisdiction, submit certificate of compliance indicating Work performed at source conforms to Contract Documents.
2. Specified source tests are not required for Work performed by approved supplier.

PART 3 - EXECUTION

3.1 INSTALLATION

A. Excavation:

1. Excavate topsoil from designated areas.
2. Strip topsoil to full depth of topsoil in designated areas.
3. Remove excess excavated materials not intended for reuse from Site.
4. Remove excavated materials not meeting requirements for topsoil materials from Site.

B. Stockpiling:

1. Stockpile excavated material meeting requirements for topsoil materials.
2. Stockpile in sufficient quantities to meet Project schedule and requirements.
3. Separate differing materials with dividers or stockpile apart to prevent intermixing of soil types or contamination.
4. Direct surface water away from stockpile to prevent erosion or deterioration of materials.

3.2 CLEANING

A. Section 01 70 00 - Execution and Closeout Requirements: Requirements for cleaning.

B. Stockpile:

1. Remove stockpile and leave area in clean and neat condition.
2. Grade Site surface to prevent freestanding surface water.

END OF SECTION 31 05 13

SECTION 31 05 16

AGGREGATES FOR EARTHWORK

PART 1 - GENERAL

1.1 SUMMARY

A. Section Includes:

1. Aggregate materials.

B. Related Requirements:

1. Section 31 23 16 - Excavation
2. Section 31 23 23 - Fill

1.2 REFERENCE STANDARDS

A. American Association of State Highway and Transportation Officials:
1. AASHTO T 180 - Standard Method of Test for Moisture-Density Relations of Soils Using a 4.54-kg (10-lb) Rammer and a 457-mm (18-in.) Drop.

1.3 SUBMITTALS

A. Section 01 33 00 - Submittal Procedures: Requirements for submittals.

B. Product Data: Submit name of imported materials source.

C. Supplier's Certificate: Certify that products meet or exceed specified requirements.

1.4 QUALITY ASSURANCE

A. Furnish each aggregate material from single source throughout Work.

B. Perform Work according to Michigan Department of Transportation standards.

C. Maintain one copy of each standard affecting Work of this Section on Site.

PART 2 - PRODUCTS

2.1 MATERIALS

A. Aggregate:

1. MDOT 22A Crushed Limestone: Comply with Michigan Department of Transportation

2.2 SOURCE QUALITY CONTROL

A. Section 01 40 00 - Quality Requirements: Requirements for testing, inspection, and analysis.

B. Testing and Analysis:

1. Comply with AASHTO T 180.
2. If tests indicate materials do not meet specified requirements, change material and retest.

C. Owner Inspection:

1. Notify Owner at least seven days before inspection is allowed.

D. Owner Witnessing:

1. Allow witnessing of source testing at supplier's test facility.
2. Notify Owner at least seven days before tests are scheduled.

E. Certificate of Compliance:

1. If supplier is approved by authorities having jurisdiction, submit certificate of compliance indicating Work performed at source conforms to Contract Documents.
2. Specified source tests are not required for Work performed by approved supplier.

PART 3 - EXECUTION

3.1 INSTALLATION

A. Excavation:

1. Remove excess excavated aggregate materials not intended for reuse from Site.
2. Remove excavated materials not meeting requirements for aggregate from Site.

B. Stockpiling:

1. Stockpile excavated material meeting requirements for aggregate materials.
2. Stockpile in sufficient quantities to meet Project schedule and requirements.
3. Separate different aggregate materials with dividers or stockpile apart to prevent intermixing of aggregate types or contamination.
4. Direct surface water away from stockpile site to prevent erosion or deterioration of materials.

3.2 CLEANING

A. Section 01 70 00 - Execution and Closeout Requirements: Requirements for cleaning.

B. Stockpile:

1. Remove stockpile and leave area in clean and neat condition.

2. Grade Site surface to prevent freestanding surface water.

END OF SECTION 31 05 16

SECTION 31 10 00

SITE CLEARING

PART 1 - GENERAL

1.1 SUMMARY

A. Section Includes:

1. Removing HMA pavement
2. Removing Tennis equipment
3. Removing fencing
4. Excavating topsoil.

1.2 UNIT PRICE - MEASUREMENT AND PAYMENT

A. HMA Surface Removal:

1. Basis of Measurement: By square yard.
2. Basis of Payment: Includes removing HMA surface, edge cutting to establish a neat line, and removal and disposal of HMA material.

B. Tennis Equipment Removal:

1. Basis of Measurement: By lump sum.
2. Basis of Payment: Includes removing and disposing of all equipment and appurtenances related to the tennis net and posts.

C. Fence Removal:

1. Basis of Measurement: By Lineal Foot.
2. Basis of Payment: Includes the complete removal and disposal of chain link fence, posts, gates, foundations/footings, and all appurtenances, hardware, fittings, caps, etc. Care shall be taken to salvage the fencing fabric for re-use where possible. Contractor shall store fencing fabric in a location and manner that will protect it for re-use. Engineer will measure removal by lineal foot horizontally along the path of the existing fence.

1.3 QUALITY ASSURANCE

A. Perform Work in accordance with Michigan Department of Transportation standards.

B. Maintain one copy of document on site.

PART 2 - EXECUTION

2.1 EXAMINATION

A. Section 01 30 00 - Administrative Requirements: Verification of existing conditions before starting work.

B. Verify existing plant life designated to remain is tagged or identified.

C. Identify salvage area for placing removed materials.

2.2 PREPARATION

A. Call MissDIG not less than three working days before performing Work.

1. Request underground utilities to be located and marked within and surrounding construction areas.

2.3 PROTECTION

A. Locate, identify, and protect utilities indicated to remain, from damage.

B. Protect trees, plant growth, and features designated to remain, as final landscaping as specified in Section 01 50 00 - Temporary Facilities and Controls.

C. Protect bench marks, survey control points, and existing structures from damage or displacement.

2.4 REMOVAL

A. Remove pavement, fencing, fence gates, and tennis equipment as indicated on Drawings. Neatly saw cut edges at right angle to surface where adjacent pavement is to remain. Backfill holes from the fence post footings with suitable material. Native material taken from the site may be used with Engineer's approval.

B. Continuously clean-up and remove waste materials from site. Do not allow materials to accumulate on site.

2.5 SCHEDULES

A. Remove the following materials:

1. HMA playing surface
2. HMA walk
3. Tennis equipment

B. Protect the following materials:

1. Trees.
2. Benches.
3. Waste receptacles.
4. Signs.
5. Other park features not indicated for removal.

END OF SECTION 31 10 00

SECTION 31 23 16

EXCAVATION

PART 1 - GENERAL

1.1 SUMMARY

A. Section Includes:

1. Soil densification.
2. Excavating for fence footings.

B. Related Requirements:

1. Section 31 05 13 - Soils for Earthwork
2. Section 31 05 16 - Aggregates for Earthwork
3. Section 31 23 23 - Fill

1.2 REFERENCE STANDARDS

A. Local utility standards when working within 48 inches of utility lines.

PART 2 - PRODUCTS

2.1 Not Used.

PART 3 - EXECUTION

3.1 PREPARATION

A. Section 01 70 00 - Execution and Closeout Requirements: Requirements for installation preparation.

B. Utility Service Locator:

1. Call MissDIG not less than three working days before performing Work.
2. Request that underground utilities be located and marked within and immediately surrounding Site.
3. Identify required lines, levels, contours, and data.

C. Existing Utilities:

1. Notify utility company to remove and relocate utilities.

2. Protect from damage utilities indicated to remain.

D. Protect plant life, lawns, rock outcroppings, and other features designated to remain as portion of final landscaping.

E. Protect benchmarks, survey control points, existing structures, fences, sidewalks, paving, and curbs from excavating equipment and vehicular traffic.

F. Do not close or obstruct roadways without permits.

G. Erect and maintain temporary barriers and security devices, including warning signs, warning lights, and similar measures, for protection of public, Owner, and existing improvements indicated to remain.

3.2 SOIL DENSIFICATION BY VIBRO-COMPACTION

A. Description:

1. Vibro-compact substrates below footing bearing surfaces for footings as indicated on Drawings before excavating Site.
2. Densify existing subsoils with existing relative density rating of "compact to dense" to attain relative density rating of "very dense."

3.3 EXCAVATION

A. Excavate subsoil to accommodate fence footings.

B. Compact disturbed load-bearing soil in direct contact with foundations to original bearing capacity.

C. Grade top perimeter of excavation to prevent surface water from draining into excavation.

D. Trim excavation and remove loose matter.

E. Removal of Deleterious Materials:
1. Remove excess and unsuitable material from Site.

F. Notify Architect/Engineer of unexpected subsurface conditions.

G. Correct over-excavated areas as directed by Engineer.

H. Remove excavated material from Site.

I. Repair or replace items indicated to remain that have been damaged by excavation.

3.4 FIELD QUALITY CONTROL

A. Section 01 70 00 - Execution and Closeout Requirements: Requirements for testing, adjusting, and balancing.

B. Inspecting: Request visual inspection of bearing surfaces by Engineer before installing subsequent Work.

3.5 PROTECTION

A. Section 01 70 00 - Execution and Closeout Requirements: Requirements for protecting finished Work.

B. Prevent displacement or loose soil from falling into excavation and maintain soil stability.

C. Protect bottom of excavations and soil adjacent to and beneath foundation from freezing.

D. Protect structures, utilities, and other facilities from damage caused by settlement, lateral movement, undermining, washout, and other hazards that may be created by earth operations.

END OF SECTION 31 23 16

SECTION 31 23 23

FILL

PART 1 - GENERAL

1.1 SUMMARY

A. Section Includes:

1. Backfilling fence footing.

B. Related Requirements:

1. Section 03 30 00 - Cast-in-Place Concrete
2. Section 31 05 13 - Soils for Earthwork
3. Section 31 05 16 - Aggregates for Earthwork
4. Section 31 23 16 - Excavation

1.2 REFERENCE STANDARDS

A. American Association of State Highway and Transportation Officials:

1. AASHTO T 180 - Standard Method of Test for Moisture-Density Relations of Soils Using a 4.54-kg (10-lb) Rammer and a 457-mm (18-in.) Drop.

B. ASTM International:

1. ASTM D698 - Standard Test Methods for Laboratory Compaction Characteristics of Soil Using Standard Effort (12,400 ft-lbf/ft3 (600 kN-m/m3)).
2. ASTM D1556/D1556M - Standard Test Method for Density and Unit Weight of Soil in Place by Sand-Cone Method.
3. ASTM D2167 - Standard Test Method for Density and Unit Weight of Soil in Place by the Rubber Balloon Method.
4. ASTM D6031/D6031M - Standard Test Method for Logging In Situ Moisture Content and Density of Soil and Rock by the Nuclear Method in Horizontal, Slanted, and Vertical Access Tubes.
5. ASTM D6938 - Standard Test Method for In-Place Density and Water Content of Soil and Soil-Aggregate by Nuclear Methods (Shallow Depth).

1.3 SUBMITTALS

A. Section 01 33 00 - Submittal Procedures: Requirements for submittals.

B. Materials Source: Submit name of imported materials suppliers.

C. Manufacturer's Certificate: Certify that products meet or exceed specified requirements.

D. Field Quality-Control Submittals: Indicate results of Contractor-furnished tests and inspections.

1.4 QUALITY ASSURANCE

A. Perform Work according to Michigan Department of Transportation standards.

B. Maintain one copy of each standard affecting Work of this Section on Site.

PART 2 - PRODUCTS

2.1 MATERIALS

A. MDOT 22A Crushed Limestone

B. Native material: As approved by Engineer

PART 3 - EXECUTION

3.1 EXAMINATION

A. Section 01 70 00 - Execution and Closeout Requirements: Requirements for installation examination.

3.2 PREPARATION

A. Section 01 70 00 - Execution and Closeout Requirements: Requirements for installation preparation.

B. Compact subgrade to specified density requirements for subsequent backfill materials.

3.3 BACKFILLING

A. Backfill areas to contours and elevations.

B. Systematically backfill to allow maximum time for natural settlement.

C. Do not backfill over porous, wet, frozen, or spongy subgrade surfaces, and do not backfill with frozen materials.

D. Maintain optimum moisture content of fill materials to attain required compaction density.

E. Make gradual grade changes and blend slope into level areas.

F. Remove surplus backfill materials from Site.

G. Leave fill material stockpile areas free of excess fill materials.

3.4 TOLERANCES

A. Section 01 40 00 - Quality Requirements: Requirements for tolerances.

B. Top Surface of Backfilling under HMA playing surface: Plus or minus 1/2 inch from required elevations.

C. Top Surface of Backfilling outside tennis court Plus or minus 1 inch from required elevations.

3.5 FIELD QUALITY CONTROL

A. Section 01 70 00 - Execution and Closeout Requirements: Requirements for testing, adjusting, and balancing.

B. Testing:

1. Laboratory Material Testing: Comply with AASHTO T 180.
2. In-Place Compaction Testing:

    a. Density Tests: Comply with ASTM D1556/D1556M, D2167, or D6938.
    b. Moisture Tests: Comply with ASTM D6031/D6031M.

3. If tests indicate that Work does not meet specified requirements, remove Work, replace, compact, and retest.
4. Proof-roll compacted fill surfaces under HMA playing surface.

3.6 PROTECTION

A. Section 01 70 00 - Execution and Closeout Requirements: Requirements for protecting finished Work.

B. Reshape and recompact fills subjected to vehicular traffic during construction.

3.7 ATTACHMENTS

A. Fill Under Grass Areas: Native material to 3 inches below finish grade; compacted uniformly to 95 percent of maximum density.

B. Fill under Asphalt Paving:

1. Compact existing base to 95 percent of maximum density.
2. 22A Crushed Limestone to 3 inches below finish paving elevation; compacted uniformly to 95 percent of maximum density.

END OF SECTION 31 23 23

SECTION 32 12 16

ASPHALT PAVING

PART 1 - GENERAL

1.1 SUMMARY

A. Section Includes:

1. Asphalt materials.
2. Aggregate materials.
3. Aggregate subbase.
4. Asphalt paving base course, binder course, and wearing course.

1.2 PRICE AND PAYMENT PROCEDURES

A. Section 01 20 00 - Price and Payment Procedures Contract Sum/Price

B. HMA 13A Base Course:

1. Basis of Measurement: By Ton.
2. Basis of Payment: Includes furnishing, placing, compacting, and testing base course.

C. HMA 36A Wearing Course:

1. Basis of Measurement: By Ton.
2. Basis of Payment: Includes tack coating surfaces, furnishing, placing, compacting, and testing wearing course.

1.3 REFERENCE STANDARDS

A. American Association of State Highway and Transportation Officials:
1. AASHTO M29 - Standard Specification for Fine Aggregate for Bituminous Paving Mixtures.
2. AASHTO M140 - Standard Specification for Emulsified Asphalt.
3. AASHTO M208 - Standard Specification for Cationic Emulsified Asphalt.
4. AASHTO M288 - Standard Specification for Geotextile Specification for Highway Applications.
5. AASHTO M320 - Standard Specification for Performance-Graded Asphalt Binder.
6. AASHTO M324 - Standard Specification for Joint and Crack Sealants, Hot Applied, for Concrete and Asphalt Pavements.
7. AASHTO MP1a - Standard Specification for Performance-Graded Asphalt Binder.

B. Asphalt Institute:

1. AI MS-2 - Mix Design Methods for Asphalt Concrete and Other Hot- Mix Types.

2. AI MS-19 - Basic Asphalt Emulsion Manual.
3. AI SP-2 - Superpave Mix Design.

C. ASTM International:

1. ASTM C1371 - Standard Test Method for Determination of Emittance of Materials Near Room Temperature Using Portable Emissometers.
2. ASTM C1549 - Standard Test Method for Determination of Solar Reflectance Near Ambient Temperature Using a Portable Solar Reflectometer.
3. ASTM D242 - Standard Specification for Mineral Filler For Bituminous Paving Mixtures.
4. ASTM D692 - Standard Specification for Coarse Aggregate for Bituminous Paving Mixtures.
5. ASTM D946 - Standard Specification for Penetration-Graded Asphalt Cement for Use in Pavement Construction.
6. ASTM D977 - Standard Specification for Emulsified Asphalt.
7. ASTM D1073 - Standard Specification for Fine Aggregate for Bituminous Paving Mixtures.
8. ASTM D1188 - Standard Test Method for Bulk Specific Gravity and Density of Compacted Bituminous Mixtures Using Coated Samples
9. ASTM D2027 - Standard Specification for Cutback Asphalt (Medium-Curing Type).
10. ASTM D2397 - Standard Specification for Cationic Emulsified Asphalt.
11. ASTM D2726 - Standard Test Method for Bulk Specific Gravity and Density of Non-Absorptive Compacted Bituminous Mixtures.
12. ASTM D2950 - Standard Test Method for Density of Bituminous Concrete in Place by Nuclear Methods.
13. ASTM D3381 - Standard Specification for Viscosity-Graded Asphalt Cement for Use in Pavement Construction.
14. ASTM D3515 - Standard Specification for Hot-Mixed, Hot-Laid Bituminous Paving Mixtures.
15. ASTM D3549 - Standard Test Method for Thickness or Height of Compacted Bituminous Paving Mixture Specimens.
16. ASTM D3910 - Standard Practices for Design, Testing, and Construction of Slurry Seal.
17. ASTM D6690 - Standard Specification for Joint and Crack Sealants, Hot Applied, for Concrete and Asphalt Pavements.
18. ASTM E408 - Standard Test Methods for Total Normal Emittance of Surfaces Using Inspection-Meter Techniques.
19. ASTM E903 - Standard Test Method for Solar Absorptance, Reflectance, and Transmittance of Materials Using Integrating Spheres.
20. ASTM E1918 - Standard Test Method for Measuring Solar Reflectance of Horizontal and Low-Sloped Surfaces in the Field.
21. ASTM E1980 - Standard Practice for Calculating Solar Reflectance Index of Horizontal and Low-Sloped Opaque Surfaces.

1.4 SUBMITTALS

A. Section 01 33 00 - Submittal Procedures: Requirements for submittals.

B. Product Data:

1. Submit product information for asphalt and aggregate materials.
2. Submit mix design with laboratory test results supporting design.

C. Manufacturer's Certificate: Certify Products meet or exceed specified requirements.

1.5 QUALITY ASSURANCE

A. Mixing Plant: Certified by Michigan Department of Transportation.

B. Obtain materials from same source throughout.

C. Perform Work in accordance with Michigan Department of Transportation standard.

D. Maintain one copy of document on site.

1.6 QUALIFICATIONS

A. Installer: Company specializing in performing work of this section with minimum 2 years' experience.

1.7 AMBIENT CONDITIONS

A. Section 01 50 00 - Temporary Facilities and Controls: Ambient conditions control facilities for product storage and installation.

B. Do not place asphalt mixture between November 1 and March 1.

C. Do not place asphalt mixture when ambient air or base surface temperature is less than 40 degrees F, or surface is wet or frozen.

PART 2 - PRODUCTS

2.1 ASPHALT PAVING

A. Performance / Design Criteria:

B. Asphalt Materials:

1. Asphalt Binder: AASHTO M320; performance grade PG 58-28.
2. Tack Coat: In accordance with Michigan Department of Transportation standards.
3. Reclaimed Asphalt Pavement (RAP): Processed material obtained by milling or full depth removal of existing asphalt paving.

C. Aggregate Materials:

1. Coarse Aggregate: ASTM D692; crushed stone, gravel, or blast furnace slag.

2. Fine Aggregate: AASHTO M29; natural sand or sand manufactured from stone, gravel, or blast furnace slag.

2.2 MIXES

A. Use dry material to avoid foaming. Mix uniformly.

B. Asphalt Paving Mixtures: Designed in accordance with Michigan Department of Transportation standards.

1. Base Course: 13A.
2. Wearing Course: 36A.

2.3 SOURCE QUALITY CONTROL

A. Section 01 40 00 - Quality Requirements: Testing, inspection and analysis requirements.

B. Submit proposed mix design for review prior to beginning of Work.

C. Test samples in accordance with AI MS-2.

PART 3 - EXECUTION

3.1 EXAMINATION

A. Section 01 70 00 - Execution and Closeout Requirements: Requirements for installation examination.

B. Verify compacted subbase is dry and ready to support paving and imposed loads.

1. Proof roll subbase with fully loaded tandem-axle dump truck in minimum two perpendicular passes to identify soft spots.
2. Remove soft subbase and replace with compacted fill as specified in Section 31 23 23.

C. Verify gradients and elevations of base are correct.

3.2 INSTALLATION

A. Subbase:
1. Prepare existing aggregate base for paving by ensuring the base is graded smooth and compacted to 95% of maximum density.

B. Tack Coat:

1. Apply tack coat in accordance with Michigan Department of Transportation standards.

C. Double Course Asphalt Paving:

1. Install Work in accordance with Michigan Department of Transportation standards.
2. Place asphalt wearing course after tack coat has “broke” but before it loses tackiness.
3. Place each course of asphalt to thickness indicated on Drawings.
4. Compact each course by rolling to specified density. Do not displace or extrude paving from position. Hand compact in areas inaccessible to rolling equipment.
5. Perform rolling with consecutive passes to achieve even and smooth finish, without roller marks.

3.3 TOLERANCES

A. Section 01 40 00 - Quality Requirements: Tolerances.

B. Flatness: Maximum variation of 1/4 inch measured with 10 foot straight edge.

C. Scheduled Compacted Thickness: Within 1/4 inch.

D. Variation from Indicated Elevation: Within 1/2 inch.

3.4 FIELD QUALITY CONTROL

A. Section 01 70 00 - Execution and Closeout Requirements: Requirements for testing, adjusting, and balancing.

B. Take samples and perform tests including mat density tests in accordance with Michigan Department of Transportation standards.

C. Asphalt Paving Mix Temperature: Measure temperature at time of placement.

D. Asphalt Paving Density: ASTM D2950 nuclear method; test one location for every 500 square yards compacted paving.

3.5 PROTECTION

A. Section 01 70 00 - Execution and Closeout Requirements: Requirements for protecting finished Work.

B. Immediately after placement, protect paving from mechanical injury until surface temperature is less than 140 degrees F (60 degrees C).

END OF SECTION 32 12 16

COMMUNITY CENTER PARK
TENNIS & PICKLEBALL COURTS

CHARTER TOWNSHIP OF YPSILANTI

AREA MAP
NOT TO SCALE

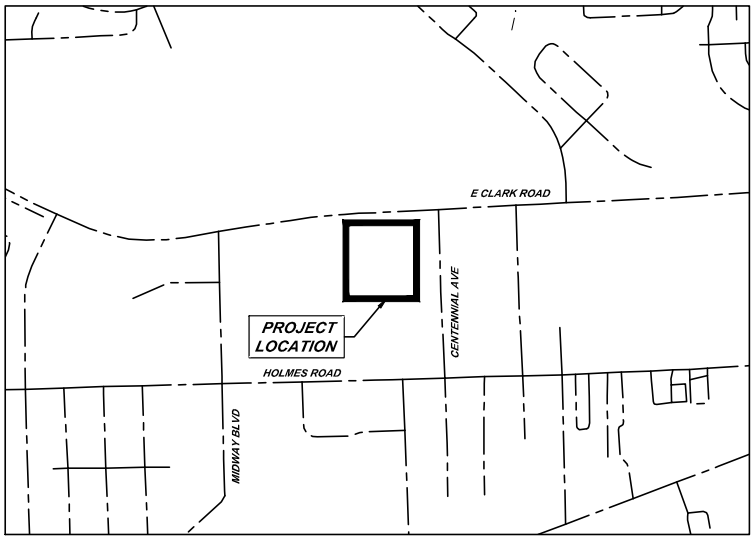

LOCATION MAP
NOT TO SCALE

N

SECTION 02
T.03S-R.07E,
YPSILANTI TOWNSHIP,
WASHTENAW COUNTY, MICHIGAN

PLAN INDEX

DESCRIPTION	NO.
COVER SHEET	1
NOTE SHEET	2
EXISTING CONDITIONS	3
DEMOLITION PLAN	4
CONSTRUCTION PLAN	5
DETAILS	6

BY	MARK	REVISIONS	DATE

THE WORK REPRESENTED BY THIS DRAWING WAS DESIGNED BY THE UNDERSIGNED IN THE SPECIFIC APPLICATION AND SPECIFIC LOCATION DESCRIBED HEREON IN ACCORDANCE WITH THE CODES IN EFFECT AT THE TIME THE DESIGN WAS DONE. THE UNDERSIGNED MAKES NO GUARANTEE AND WILL NOT BE LIABLE FOR ANY OTHER LOCATION, DONATION, OR USE BY ANYONE.

COMMUNITY CENTER TENNIS & PICKLEBALL COURTS
CHARTER TOWNSHIP OF YPSILANTI

COVER SHEET

Spicer Group
SAGINAW OFFICE
230 S. Washington Ave.
Saginaw, MI 48607
Tel: 989-754-1717
Fax: 989-754-1410
www.SpicerGroup.com

STATE OF MICHIGAN
JENNIFER L. CICHIAB
ENGINEER
No. 43220

DE. BY: ACJ CH. BY: JLC PROJECT NO.
DR. BY: ACJ APP. BY: JLC 129784SG2020

STDS. SHEET 1 OF 6
DATE JULY, 2023 FILE NO.
SCALE

GENERAL NOTES

NO WORK SHALL BE PERFORMED BEFORE 7:00 AM OR AFTER 7:00 PM MONDAY THROUGH SATURDAY. NO WORK SHALL HAPPEN ON SUNDAYS OR HOLIDAYS. UNLESS AUTHORIZED BY THE OWNER.

CONTRACTOR SHALL NOTIFY ENGINEER 48 HOURS PRIOR TO START OF CONSTRUCTION, CONSTRUCTION STAKING AND INSPECTION.

CONTRACTOR SHALL MAINTAIN ACCESS FOR MAIL DELIVERY AND GARBAGE PICKUP AT ALL PARCELS. IF THESE SERVICES CANNOT BE PERFORMED CONTRACTOR IS RESPONSIBLE FOR TAKING THE NECESSARY MEASURES TO CARRY THEM OUT.

COORDINATE DRIVE CLOSURES AND MAIL BOX RELOCATION WITH LANDOWNERS A MINIMUM OF ONE DAY IN ADVANCE.

CONTRACTOR TO PROVIDE DUST CONTROL AND SWEEP ROADS DAILY.

ALL EXCAVATED MATERIAL NOT TO BE REUSED OR DISPOSED OF ON SITE SHALL BE REMOVED FROM SITE. THE CONTRACTOR IS RESPONSIBLE FOR DISPOSING MATERIALS ACCORDING TO LOCAL AND STATE REQUIREMENTS.

UNDERGROUND UTILITIES/MISS DIG
FOR PROTECTION OF UNDERGROUND UTILITIES AND IN CONFORMANCE WITH PUBLIC ACT 174, 2013, THE CONTRACTOR SHALL DIAL 1-800-482-7171 OR 811 A MINIMUM OF THREE FULL WORKING DAYS, EXCLUDING SATURDAYS, SUNDAYS, AND HOLIDAYS PRIOR TO BEGINNING EACH EXCAVATION IN AREAS WHERE PUBLIC UTILITIES HAVE NOT BEEN PREVIOUSLY LOCATED. MEMBERS WILL THUS BE ROUTINELY NOTIFIED. THIS DOES NOT RELIEVE THE CONTRACTOR OF THE RESPONSIBILITY OF NOTIFYING UTILITY OWNERS WHO MAY NOT BE A PART OF THE "MISS DIG" ALERT SYSTEM.

THE EXISTING UTILITIES ON THESE DRAWINGS HAVE BEEN SHOWN ACCORDING TO THE BEST AVAILABLE INFORMATION. CONTRACTOR SHALL FIELD LOCATE ALL UTILITIES PRIOR TO BEGINNING CONSTRUCTION AND SHALL NOTIFY THE ENGINEER AS TO WHERE POSSIBLE CONFLICT EXISTS.

ALL CONSTRUCTION UNDER EXISTING UTILITIES, INCLUDING HOUSE SERVICES, SHALL BE COMPLETELY BACKFILLED WITH SAND, IN 12" LAYERS, AND COMPACTED TO NOT LESS THAN 95% OF THE MAXIMUM UNIT WEIGHT.

ANY UTILITIES ENCOUNTERED DURING CONSTRUCTION SHALL BE SUPPORTED, PER THE SPECIFICATIONS OF THE INDIVIDUAL UTILITY COMPANY CLAIMING OWNERSHIP OF THE UTILITY.

SOIL EROSION AND SEDIMENTATION CONTROL MEASURES
APPROPRIATE SOIL EROSION AND SEDIMENTATION CONTROL MEASURES SHALL BE IN PLACE PRIOR TO EARTH-DISTURBING ACTIVITIES. PLACE TURF ESTABLISHMENT ITEMS AS SOON AS POSSIBLE ON POTENTIAL ERODABLE SLOPES AS DIRECTED BY OWNER. CRITICAL DITCH GRADES SHALL BE PROTECTED WITH EITHER SOD OR SEED/MULCH OR MULCH BLANKET AS DIRECTED BY OWNER.

IT IS THE RESPONSIBILITY OF THE CONTRACTOR TO ENSURE THAT SOIL EROSION AND SEDIMENTATION CONTROL MEASURES ARE IN PLACE AND MAINTAINED UNTIL THE CONTRACT HAS BEEN COMPLETED AND ACCEPTED. MEASURES SHALL ONLY BE PAID FOR ONCE.

ALL CATCHBASINS AND SEDIMENTATION TRAP/BASIN SHALL BE CLEANED OUT UPON COMPLETION OF THE PROJECT.

CONTRACTOR SHALL CONFORM TO SOIL EROSION AND SEDIMENTATION CONTROL ACT, PART 91 OF ACT 451 OF 1994.

PROPERTY OWNERS
PROPERTY OWNERS' NAMES, WHERE SHOWN, ARE FOR INFORMATION ONLY, AND THEIR ACCURACY IS NOT GUARANTEED.

ADJUSTING MONUMENT BOXES
ALL GOVERNMENT CORNERS ON THIS PROJECT SHALL BE PRESERVED, WHETHER SHOWN OR NOT. IT MAY BE NECESSARY TO PLACE OR ADJUST MONUMENT BOXES, AS REQUIRED.

TRAFFIC
THE CONTRACTOR SHALL MAINTAIN LOCAL TRAFFIC AT ALL TIMES. SIGNAGE MUST BE IN ACCORDANCE WITH THE MICHIGAN MANUAL ON UNIFORM TRAFFIC CONTROL DEVICES AND SHALL BE COORDINATED WITH THE ENGINEER AND GOVERNING ROAD AGENCY. PERMITS MAY BE REQUIRED.

PERMITS
PRIOR TO COMMENCING CONSTRUCTION, THE CONTRACTOR IS RESPONSIBLE FOR OBTAINING ALL PERMITS REQUIRED BY THE APPROPRIATE AGENCIES.

CONSTRUCTION PROCEDURES SHALL CONFORM TO THE REQUIREMENTS OF THE APPROPRIATE AGENCIES.

GENERAL NOTES CONT.

SITE WORK
ALL TRENCHED CONSTRUCTION UNDER GRAVEL, PAVED SURFACES OR UTILITIES SHALL BE BACKFILLED WITH CLASS II SAND OR OTHER APPROVED GRANULAR MATERIAL IN 12" LAYERS AND COMPACTED TO 95% OF ITS MAXIMUM UNIT WEIGHT.

UNPAVED AREAS SHALL BE SMOOTHLY GRADED AND THE SURFACE STABILIZED BY SEEDING OR OTHERWISE. THE MAXIMUM DESIRABLE SLOPE IS 3 HORIZONTAL TO 1 VERTICAL UNLESS NOTED OTHERWISE.

CONTRACTOR SHALL SAWCUT PAVEMENT AND CURB & GUTTER FOR A CLEAN EDGE TO INSTALL PROPOSED PAVEMENT AND CURB & GUTTER.

CONTRACTOR IS RESPONSIBLE TO MAINTAIN POSITIVE DRAINAGE PATTERN TO ENSURE NO PONDING OF WATER ON ADJACENT EXISTING AND PROPOSED PAVED SURFACES.

DIMENSIONS SHOWN ARE GIVEN TO THE BACK OF CURBS AND FACE OF BUILDINGS UNLESS NOTED OTHERWISE.

STORM SEWER
PIPE MATERIALS SHALL BE AS FOLLOWS:
• 12" DIAMETER AND ABOVE - CONCRETE PIPE, C-76, ASTM C-443 OR PVC PIPE SDR35.
• LESS THAN 12" DIAMETER - PVC PIPE SDR35, OR HIGH DENSITY POLYETHYLENE (HDPE), DUAL WALL, CORRUGATED.

SANITARY SEWER
ALL SANITARY SEWER SHALL BE PVC, SDR35, TYPE PSM PLASTIC, CONFORMING TO ANSI/ASTM D3034 WITH RUBBER GASKET JOINTS, UNLESS SPECIFIED OTHERWISE.

WATER MAIN
WATER MAIN PIPE SHALL CONFORM TO THE MUNICIPALITY'S STANDARDS AND SHALL BE PVC C-900 OR DUCTILE IRON, CLASS 52, CEMENT LINED.

WATER SERVICE PIPE FROM 3/4" TO 2-1/2" SHALL BE SEAMLESS, TYPE-K COPPER.

WATER MAIN SHALL HAVE A MINIMUM COVER OF 5'-6" UNLESS OTHERWISE SPECIFIED.

CONTRACTOR SHALL SECURE ALL VERTICAL BENDS WITH A MINIMUM OF TWO 3/4" ANCHOR RODS PER FITTING EITHER TO A CONCRETE BLOCK, WELDED STEEL PIPE SLEEVE, OR PIPE COLLAR. METHOD USED SHALL BE DETERMINED BY THE ENGINEER.

ALL FITTINGS SHALL BE MECHANICAL JOINT. ALL HYDRANTS AND VALVES SHALL CONFORM TO THE MUNICIPALITY'S STANDARDS.

ALL BURIED FERROUS PARTS SHALL RECEIVE A 10 MIL (DRY MILL THICKNESS) COATING OF COAL TAR EPOXY.

ABBREVIATIONS

BC = BACK OF CURB
BM = BENCH MARK
C/C = CENTER TO CENTER
CB = CATCH BASIN
CL = CENTERLINE
CJ = CONSTRUCTION JOINT
CMP = CORRUGATED METAL PIPE
CSP = CORRUGATED STEEL PIPE
CONC = CONCRETE
DI = DUCTILE IRON PIPE
EF = EACH FACE
ELEC = ELECTRIC
EL OR ELEV = ELEVATION
EOM = EDGE OF METAL
EOP = EDGE OF PAVEMENT
EQ/SP = EQUALLY SPACED
ESMT = EASEMENT
EW = EACH WAY
EX OR EXIST = EXISTING
FF = FINISH FLOOR
FL = FLOW LINE
FS = FINISH SURFACE
FG = FINISH GROUND
GALV = GALVANIZED
G = GUTTER
HDG = HOT DIP GALVANIZED
HDPE = HIGH DENSITY POLYETHYLENE
HP = HIGH POINT
HMA = HOT MIX ASPHALT
HYD = HYDRANT
INV = INVERT
LP = LOW POINT
OC = ON CENTER
OH = OVERHEAD
MH = MANHOLE
MIN = MINIMUM
MON = MONUMENT
NFL = NOT FIELD LOCATED
N.T.S = NOT TO SCALE
PROP = PROPOSED
PVC = POLYVINYL CHLORIDE
RCP = REINFORCED CONCRETE PIPE
ROW = RIGHT OF WAY
SAN = SANITARY
SB = SOIL BORING
SS = STAINLESS STEEL
STA = STATION
STM = STORM
SWR = SEWER
T/B = TOP AND BOTTOM
TC = TOP OF CURB
TOB = TOP OF BANK
TOS = TOE OF SLOPE
TELE = TELEPHONE
TRW = TOP OF RETAINING WALL
TW = TOP OF WALK
UNO = UNLESS NOTED OTHERWISE
WM = WATER MAIN
WS = WATER SURFACE ELEVATION

LINE TYPE LEGEND

- EXISTING ROAD CENTERLINE
- EXISTING WATER MAIN
- EXISTING SANITARY SEWER OR FORCEMAIN
- EXISTING STORM SEWER
- EXISTING TELEPHONE CABLE
- EXISTING GAS MAIN
- EXISTING ELECTRIC
- PROPOSED UTILITY
- EXISTING CURB & GUTTER
- PROPOSED CURB & GUTTER
- FENCE LINE
- OVERHEAD UTILITY
- RAILROAD TRACKS
- STATION LINE
- LIMITS OF RIGHT OF WAY
- EASEMENT
- SILT FENCE
- RCP/ERSC PAN CURB & GUTTER
- TREE LINE
- EXISTING CONTOURS
- PROPOSED CONTOURS

SYMBOL LEGEND
EXISTING SYMBOLS

- MANHOLE
- CATCH BASIN
- CURB CATCH BASIN
- FIRE HYDRANT
- GAS VALVE
- WATER VALVE
- TELEPHONE PEDESTAL
- POWER POLE
- TELEPHONE POLE
- POWER AND TELEPHONE POLE
- LIGHT POLE
- GUY ANCHOR AND POLE
- MAIL BOX
- WATER METER
- TELEPHONE MANHOLE
- ELECTRIC MANHOLE
- MONITORING WELL
- HAND HOLE
- TRANSFORMER
- ELECTRICAL PEDESTAL
- BARRIER FREE PARKING
- SPRINKLER
- RAILROAD SIGNAL
- ANTENNA
- SATELLITE DISH
- AIR CONDITIONING UNIT
- SOIL BORING
- BENCH MARK
- FOUND SURVEY CORNER
- SET 1/2" IRON ROD
- 1/4 SECTION CORNER
- BREAK IN LINE
- EXISTING SIGN-1 POST
- EXISTING SIGN-2 POST
- STUMP
- WETLANDS
- PINE
- BUSH
- TREE

PROPOSED SYMBOLS

- MANHOLE
- CATCHBASIN
- FIRE HYDRANT
- WATER VALVE
- BARRIER FREE PARKING
- LIGHT POLES
- DRAINAGE FLOW
- SPOT ELEVATION LABELS
  - E = FLOWLINE
  - TW = WALK
  - TC = TOP OF CURB
  - FS = FINISH SURFACE

CONTACTS

TOWNSHIP SUPERVISOR ATT: BRENDA STUMBO 7200 S HURON RIVER DR YPSILANTI, MI 48197 PHONE: (734) 481-0617	SUPERVISOR
PARK COMMISSION ATT: EDWARD BURNETT 7200 S HURON RIVER DR YPSILANTI, MI 48197 PHONE: (734) 484-0073	COMMISSIONER
DTE ENERGY ATT: SARAH KIPP ONE ENERGY PLAZA DETROIT, MI 48226 PHONE: (313) 235-5111	ELECTRIC
DTE GAS ATT: MICHAEL HARRISON ONE ENERGY PLAZA DETROIT, MI 48226 PHONE: (313) 235-5632	GAS
PARK METRO FIBERNET ATT: ERIC ESSENBURG 7200 2732 E MICHIGAN AVE LANSING MI, 48912 PHONE: (616) 821-7705	PHONE
YPSILANTI COMMUNITY UTILITY AUTHORITY ATT: MICHAEL SHAFFER 2777 STATE RD YPSILANTI, MI 48198 PHONE: (734) 484-4600	UTILITIES
ATT ATT: SHANITA CRANKFIELD 84 N MILL ST., 4TH FLOOR PONTIAC, MI 48343 PHONE: (248) 454-4344	INTERNET
MISS DIG PHONE: (800) 482-7171 OR 811	MICHIGAN UTILITY NOTIFICATION CENTER

BY	MARK	REVISIONS	DATE

THE WORK IN PROGRESS BY THIS DRAWING WAS DESIGNED BY THE ENGINEER OF THIS SPECIFIC APPLICATION AND SPECIFIC LOCATION DESCRIBED HEREIN IN ACCORDANCE WITH THE CONDITIONS PREVALENT AT THE TIME THE DESIGN WAS DONE. THE ENGINEER DOES NOT GUARANTEE AND WILL NOT BE LIABLE FOR ANY DETERIORATION, CONDITION, DESIGN OR FAILURE.

COMMUNITY CENTER TENNIS & PICKLEBALL COURTS
CHARTER TOWNSHIP OF YPSILANTI

NOTE SHEET

SPICER GROUP
BASIN IN OFFICE
330 S. Washington Ave.
Saginaw, MI 48607
Tel: 989-754-1777
Fax: 989-754-4149
www.SpicerGroup.com

DE. BY: ###	CH. BY: ###	PROJECT NO. 129784SG2020
DR. BY: ###	APP. BY: ###	
STDS.		SHEET 2 OF 6
DATE JULY, 2023		FILE NO.
SCALE		

I:\PROJECTS\129784SG2020 - Community Center Tennis Improvements\DESIGN\CAD\Sheets\129784SG2020_TYPSD_NOTE SHEET.dwg, 7/31/2023 10:02:43 AM, adams, DWG To PDF.pc3, ANSI full bleed D (24.00 x 36.00 Inches), 1:1

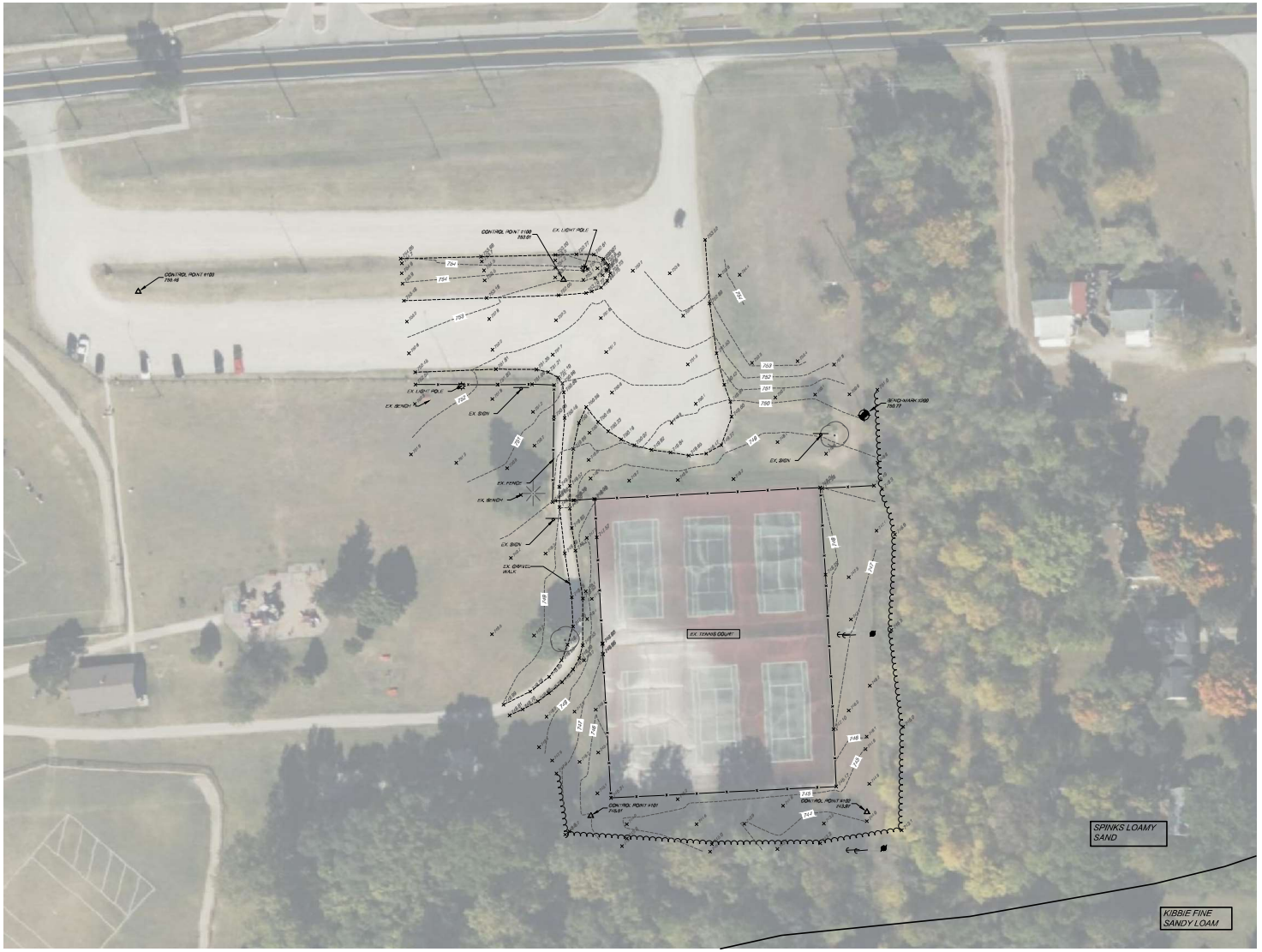

N

SECTION 02
T.03S-R.07E,
YPSILANTI TOWNSHIP,
WASHINGTON COUNTY, MICHIGAN

BY	MARK	REVISIONS	DATE

THE WORK REPRESENTED BY THIS DRAWING WAS DESIGNED BY THE ENGINEER FOR THE SPECIFIC APPLICATION AND SPECIFIC LOCATION DESCRIBED HEREON, IN ACCORDANCE WITH THE CONDITIONS PREVALENT AT THE TIME THE DESIGN WAS DONE. THE ENGINEER DOES NOT GUARANTEE AND WILL NOT BE LIABLE FOR ANY OTHER LOCATION, CONDITION, DESIGN OR PURPOSE.

COMMUNITY CENTER TENNIS & PICKLEBALL COURTS
CHARTER TOWNSHIP OF YPSILANTI

EXISTING CONDITIONS

SAGINAW OFFICE
230 S. Washington Ave.
Saginaw, MI 48607
Tel: 989-754-4173
Fax: 989-754-4448
www.SpicerGroup.com

DE. BY: ###	CH. BY: ###	PROJECT NO.	
DR. BY: ###	APP. BY: ###	12978SG2022	
STDS.		SHEET 3 OF 6	
DATE JULY, 2023		FILE NO.	
SCALE 1" = 40'			

N

SECTION 02
T.03S-R.07E,
YPSILANTI TOWNSHIP,
WASHTENAW COUNTY, MICHIGAN

GRAVEL SURFACE REMOVAL

HMA REMOVAL

BY	MARK	REVISIONS	DATE

THE SEAL REPRESENTED BY THIS DRAWING WAS DESIGNED BY THE ENGINEER FOR THIS SPECIFIC APPLICATION AND SPECIFIC LOCATION DESCRIBED HEREIN IN ACCORDANCE WITH THE CONDITIONS PREVALENT AT THE TIME THE DESIGN WAS DONE. THE ENGINEER DOES NOT GUARANTEE AND WILL NOT BE LIABLE FOR ANY OTHER LOCATION, CONDITION, DESIGN OR PURPOSE.

COMMUNITY CENTER TENNIS & PICKLEBALL COURTS
CHARTER TOWNSHIP OF YPSILANTI

DEMOLITION PLAN

SAGINAW OFFICE
230 S. Washington Ave.
Saginaw, MI 48607
Tel: 989-754-4717
Fax: 989-754-4445
www.SpicerGroup.com

DE. BY:	CH. BY: ###	PROJECT NO.
DR. BY:	APP. BY: ###	12978SG2022
STDS.		SHEET 4 OF 6
DATE JULY, 2023		FILE NO.
SCALE 1" = 20'		

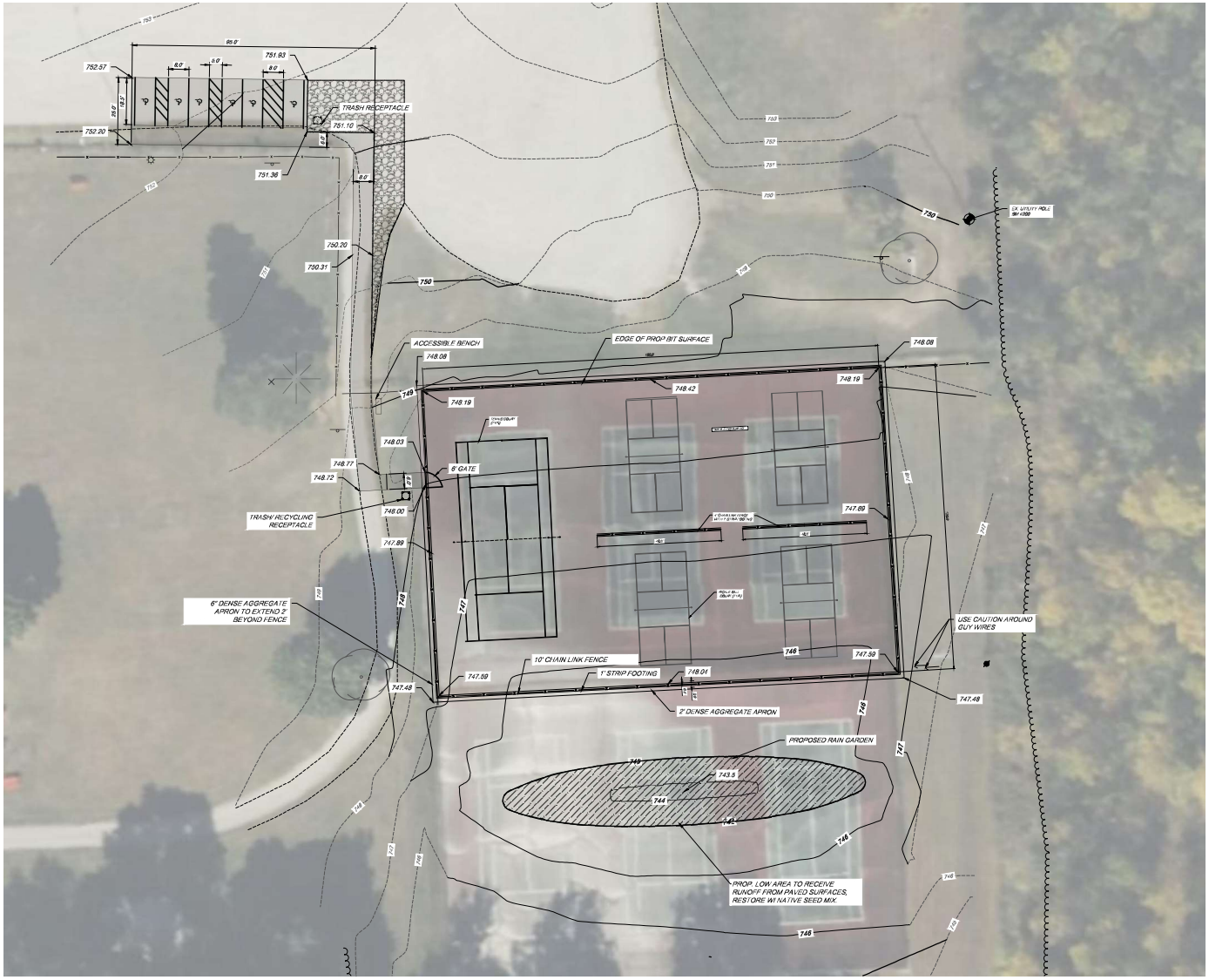

N

SECTION 02
T.03S-R.07E,
YPSILANTI TOWNSHIP,
WASHTENAW COUNTY, MICHIGAN

RAIN GARDEN

PROPOSED GRAVEL SURFACE

PROPOSED HMA SURFACE

BY	MARK	REVISIONS	DATE

THE WORK REPRESENTED BY THIS DRAWING WAS DESIGNED BY THE ENGINEER FOR THE SPECIFIC APPLICATION AND SPECIFIC LOCATION DESCRIBED HEREON IN ACCORDANCE WITH THE CONDITIONS PREVALENT AT THE TIME THE DESIGN WAS DONE. THE ENGINEER DOES NOT GUARANTEE AND WILL NOT BE LIABLE FOR ANY OTHER LOCATION, CONDITION, DESIGN OR PURPOSE.

COMMUNITY CENTER TENNIS & PICKLEBALL COURTS
CHARTER TOWNSHIP OF YPSILANTI

CONSTRUCTION PLAN

SAGINAW OFFICE
230 S. Washington Ave.
Saginaw, MI 48607
Tel: 989-754-4717
Fax: 989-754-4448
www.SpicerGroup.com

DE. BY: ###	CH. BY: ###	PROJECT NO.	
DR. BY: ###	APP. BY: ###	12978SG2022	
STDS.		SHEET 5 OF 6	
DATE JULY, 2023		FILE NO.	
SCALE 1" = 20'			

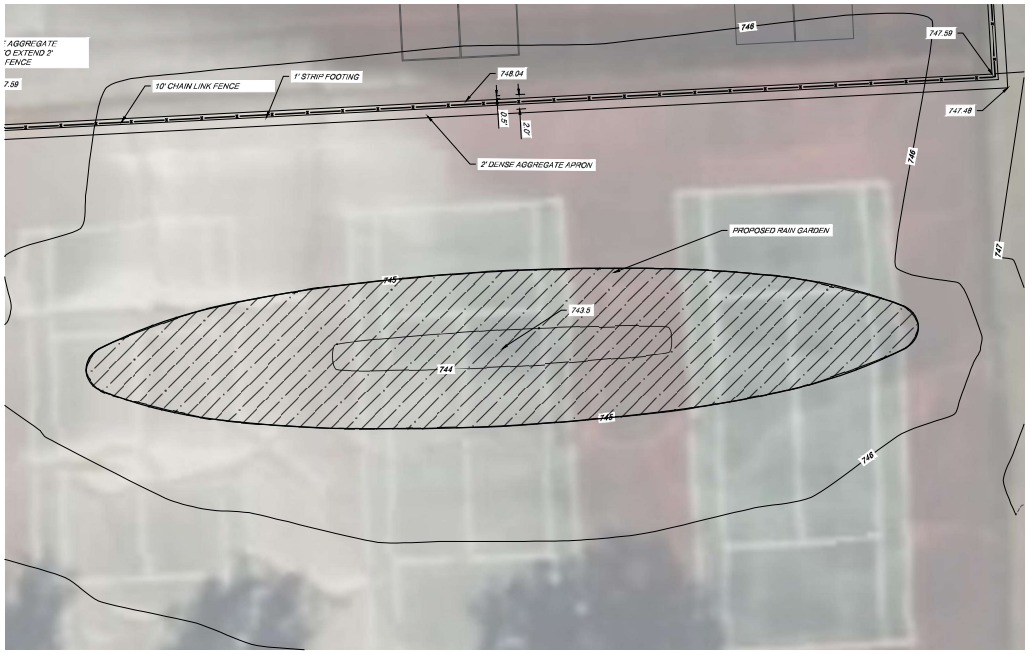

N

SECTION 02
T.03S-R.07E,
YPSILANTI TOWNSHIP,
WASHTENAW COUNTY, MICHIGAN

PROPOSED HMA SURFACE

BY	MARK	REVISIONS	DATE

THE WORK REPRESENTED BY THIS DRAWING WAS DESIGNED BY THE ENGINEER FOR THE SPECIFIED APPLICATION AND SPECIFIC LOCATION DESCRIBED HEREON, IN ACCORDANCE WITH THE CONDITIONS PREVALENT AT THE TIME THE DESIGN WAS DONE. THE ENGINEER DOES NOT GUARANTEE AND WILL NOT BE LIABLE FOR ANY OTHER LOCATION, CONDITION, DESIGN OR PURPOSE.

COMMUNITY CENTER TENNIS & PICKLEBALL COURTS
CHARTER TOWNSHIP OF YPSILANTI

RAIN GARDEN PLAN

SAGINAW OFFICE
230 S. Washington Ave.
Saginaw, MI 48607
Tel: 989-754-4717
Fax: 989-754-4448
www.SpicerGroup.com

DE. BY: ###	CH. BY: ###	PROJECT NO.	
DR. BY: ###	APP. BY: ###	12978SG2022	
STDS.		SHEET 6 OF 7	
DATE JULY, 2023		FILE NO.	
SCALE 1" = 10'			

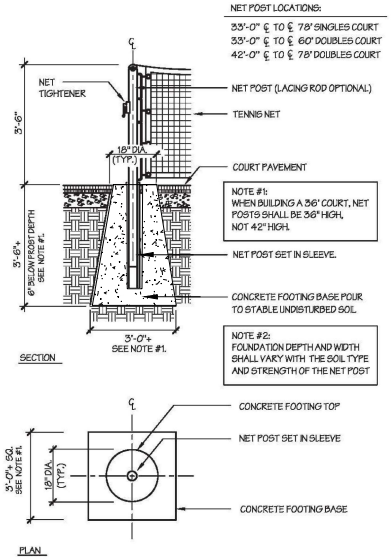

TENNIS NET POST FOOTING – PYRAMID SHAPE

NOT TO SCALE

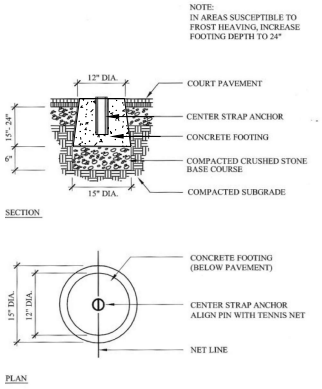

TENNIS NET CENTER STRAP ANCHOR

NOT TO SCALE

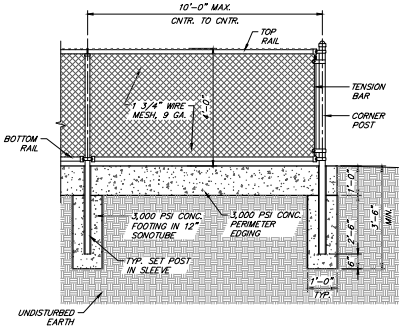

TYP. 4'-0" H. FENCE SECTION/ELEVATION

NOT TO SCALE

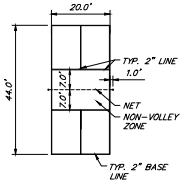

PICKLEBALL COURT STRIPING PLAN

SCALE: 1" = 20'

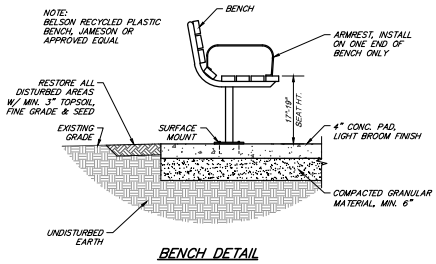

BENCH DETAIL

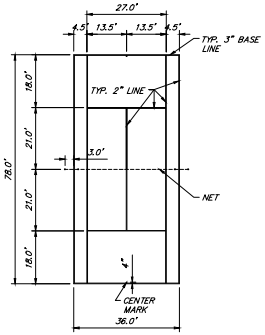

78' TENNIS COURT STRIPING PLAN

SCALE: 1" = 20'

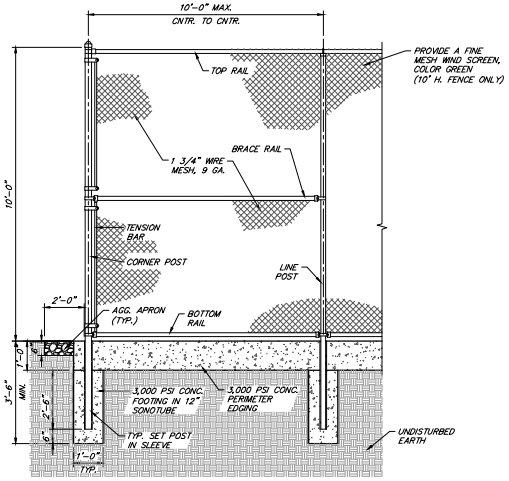

TYP. 10'-0" H. FENCE SECTION/ELEVATION

NOT TO SCALE

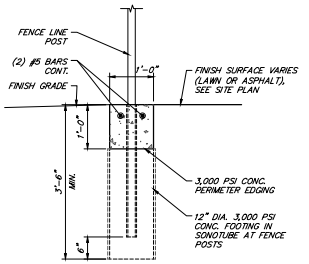

TYP. CONC. FENCE PERIMETER DETAIL

SCALE: 3/4" = 1'-0"

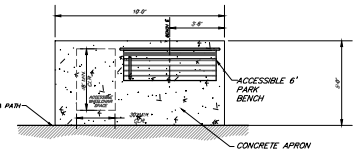

BENCH DETAIL

NOT TO SCALE

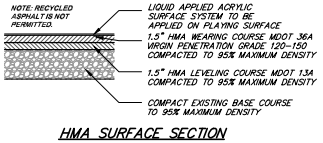

HMA SURFACE SECTION

NOT TO SCALE

BY	MARK	REVISIONS	DATE

THE WORK REPRESENTED BY THIS DRAWING WAS DESIGNED BY THE ENGINEER OF THIS SPECIFIC APPLICATION AND SPECIFIC LOCATION DESCRIBED HEREIN IN ACCORDANCE WITH THE CONDITIONS PREVALENT AT THE TIME THE DESIGN WAS DONE. THE ENGINEER DOES NOT GUARANTEE AND WILL NOT BE LIABLE FOR ANY OTHER LOCATION, CONDITION, DESIGN OR PURPOSE.

COMMUNITY CENTER TENNIS & PICKLEBALL COURTS
CHARTER TOWNSHIP OF YPSILANTI

DETAILS

SAGINAW OFFICE
330 S. Washington Ave.
Saginaw, MI 48607
Tel. 989-754-1777
Fax. 989-754-1448
www.SpicerGroup.com

DE. BY: ###	CH. BY: ###	PROJECT NO.	
DR. BY: ###	APP. BY: ###	129784SG2020	
STDS.		SHEET 6 OF 6	
DATE JULY, 2023		FILE NO.	
SCALE			

Township Supervisor
Brenda L. Stumbo
Township Clerk
Heather Jarrell Roe
Township Treasurer
Stan Eldridge

YPSILANTI TOWNSHIP
— RESIDENTIAL SERVICES DEPARTMENT —

Trustees
Ryan Hunter
John Newman II
Gloria Peterson
Debbie Swanson

MEMORANDUM

To: Charter Township of Ypsilanti Board of Trustees

From: John Hines, Interim Residential Services Director

Date: August 10, 2023

RE: Request Authorization to seek sealed bids for the repairs of Ford Lake Park shelters 1-4 and West Willow Park shelter as part of the American Rescue Plan Act (ARPA) projects funding.

The Residential Services Department is requesting authorization to seek sealed bids for the repairs of Shelters 1-4 at Ford Lake Park and West Willow Park Shelter and the surrounding area as part of BOT approved Resolution 2023-07, which designated ARPA funds to various needed projects for the township.

Project #3: Park Improvements to West Willow Park are budgeted in GL#282-901-981.150. For this bid, proposed work is to install new cedar wood fascia, new asphalt shingles with new metal drip edge on treated plywood decking, and new paint.

Project #12 Park Shelter Repairs for Ford Lake Park are budgeted in GL#282-901-981.070. For this bid, proposed work is

Shelter 1: New Shingles with metal drip edge, New Fascia, Repair/replace decking, new concrete slab portion, power wash and stain all exposed wood, new light fixture, site restoration that includes new walkway.

Shelter 2: New Shingles with metal drip edge, New Fascia, Repair/replace decking, new concrete slab, power wash and stain all exposed wood, new light fixtures.

Shelter 3: New Shingles with metal drip edge, New Fascia, Repair/replace decking, new concrete slab, power wash and stain all exposed wood, new light fixtures, replace steel column bases.

Shelter 4: New wood stain.

Staff will return to the Board of Trustees to recommend and award the selection of a bidder.

Please find attached this memorandum the proposed construction documents and the bidding package as created by Spicer Group.

BIDDING DOCUMENTS
FOR THE

ARPA PARKS PROJECT - YPSILANTI TOWNSHIP

YPSILANTI TOWNSHIP
2025 E CLARK RD.
YPSILANTI, MI 48198

Prepared By:
SPICER GROUP, INC.
SAGINAW, MICHIGAN
AUGUST 2023

Plans Included

DA-1472-01-09

Project I.D. Number: 134586SG2023

BID FORM

Item No.	Estimated Quantity	Unit	Description	Unit Price	Amount
Ford Lake Park					
Shelter 1					
1.	1	LS	Div. 1 - General Requirements	$ Lump Sum	$
2.	1	LS	Div. 2 - Existing Conditions (Demo.)	$ Lump Sum	$
3.	1	LS	Div. 3 - Concrete	$ Lump Sum	$
4.	1	LS	Div. 6 - Woods, Plastics, and Composites	$ Lump Sum	$
5.	1	LS	Div. 7 - Thermal and Moisture Protection	$ Lump Sum	$
6.	1	LS	Div. 9 - Finishes	$ Lump Sum	$
7.	1	LS	Div. 26 - Electrical (Lighting)	$ Lump Sum	$
8.	1	LS	Div. 31 - Earthwork	$ Lump Sum	$
9.	1	LS	Div. 32 - Exterior Improvements (Site Restoration)	$ Lump Sum	$
10.	1	EA	Contingency Allowance	$ 10,000.00	$ 10,000.00
Shelter 1 Total					$
Shelter 2					
11.	1	LS	Div. 1 - General Requirements	$ Lump Sum	$
12.	1	LS	Div. 2 - Existing Conditions (Demo.)	$ Lump Sum	$
13.	1	LS	Div. 3 - Concrete	$ Lump Sum	$
14.	1	LS	Div. 4 - Masonry (Repairs)	$ Lump Sum	$
15.	1	LS	Div. 6 - Woods, Plastics, and Composites	$ Lump Sum	$
16.	1	LS	Div. 7 - Thermal and Moisture Protection	$ Lump Sum	$
17.	1	LS	Div. 9 - Finishes	$ Lump Sum	$
18.	1	LS	Div. 26 - Electrical (Lighting)	$ Lump Sum	$
19.	1	LS	Div. 31 - Earthwork	$ Lump Sum	$
20.	1	LS	Div. 32 - Exterior Improvements (Site Restoration)	$ Lump Sum	$
21.	1	EA	Contingency Allowance	$ 10,000.00	$ 10,000.00
Shelter 2 Total					$
Shelter 3					
22.	1	LS	Div. 1 - General Requirements	$ Lump Sum	$
23.	1	LS	Div. 2 - Existing Conditions (Demo.)	$ Lump Sum	$
24.	1	LS	Div. 3 - Concrete	$ Lump Sum	$
25.	1	LS	Div. 5 - Metals (Column Base Repairs)	$ Lump Sum	$
26.	1	LS	Div. 6 - Woods, Plastics, and Composites	$ Lump Sum	$
27.	1	LS	Div. 7 - Thermal and Moisture Protection	$ Lump Sum	$
28.	1	LS	Div. 9 - Finishes	$ Lump Sum	$
29.	1	LS	Div. 26 - Electrical (Lighting)	$ Lump Sum	$
30.	1	LS	Div. 31 - Earthwork	$ Lump Sum	$

Item No.	Estimated Quantity	Unit	Description	Unit Price	Amount
31.	1	LS	Div. 32 - Exterior Improvements (Site Restoration)	$ Lump Sum	$
32.	1	EA	Contingency Allowance	$ 10,000.00	$ 10,000.00
Shelter 3 Total					$
Shelter 4					
33.	1	LS	Div. 1 - General Requirements	$ Lump Sum	$
34.	1	LS	Div. 9 - Finishes	$ Lump Sum	$
Shelter 4 Total					$
Ford Lake Park Total					$
West Willow Park (Pavilion)					
35.	1	LS	Div. 1 - General Requirements	$ Lump Sum	$
36.	1	LS	Div. 2 - Existing Conditions (Demo.)	$ Lump Sum	$
37.	1	LS	Div. 6 - Woods, Plastics, and Composites	$ Lump Sum	$
38.	1	LS	Div. 7 - Thermal and Moisture Protection	$ Lump Sum	$
39.	1	LS	Div. 9 - Finishes	$ Lump Sum	$
West Willow Park Total					$
TOTAL AMOUNT OF BID----------					$
40.	1	LS	Alternate Add No. 1: Replace Entire Slab at Shelter 1 Include Rat Wall w/ Slab	$ Lump Sum	$
TOTAL AMOUNT OF BID INCLUDING ALTERNATE(S)----------					$
41.	1	SF	Square Foot Cost to Replace 2x6 T&G Wood Roof Decking for a minimum of 100 sq. ft.	$	
42.	1	SF	Square Foot Cost to Replace 4" Thk. Concrete Slab.	$	

Division	Section Title	Pages
	SPECIFICATIONS GROUP	
	General Requirements Subgroup	
DIVISION 01 - GENERAL REQUIREMENTS		
01 10 00	SUMMARY	1
01 20 00	PRICE AND PAYMENT PROCEDURES	4
01 25 00	SUBSTITUTION PROCEDURES	2
01 30 00	ADMINISTRATIVE REQUIREMENTS	4
01 33 00	SUBMITTAL PROCEDURES	6
01 40 00	QUALITY REQUIREMENTS	3
01 50 00	TEMPORARY FACILITIES AND CONTROLS	6
01 60 00	PRODUCT REQUIREMENTS	2
01 70 00	EXECUTION AND CLOSEOUT REQUIREMENTS	5
	Facility Construction Subgroup	
DIVISION 02 - EXISTING CONDITIONS		
02 41 19.13	SELECTIVE BUILDING DEMOLITION	5
DIVISION 03 - CONCRETE		
03 10 00	CONCRETE FORMING AND ACCESSORIES	9
03 20 00	CONCRETE REINFORCING	5
03 30 00	CAST-IN-PLACE CONCRETE	10
03 39 00		2
DIVISION 05 - METALS		
05 52 00	METAL RAILINGS	11
DIVISION 06 - WOOD, PLASTICS, AND COMPOSITES		
06 10 00	ROUGH CARPENTRY	5
DIVISION 07 - THERMAL AND MOISTURE PROTECTION		
07 31 13	ASPHALT SHINGLE ROOF SYSTEM	14
07 62 00	SHEET METAL FLASHING AND TRIM	3
07 90 00	JOINT PROTECTION	7
DIVISION 09 – FINISHES		
09 90 00	PAINTING AND FINISHES	6

Site and Infrastructure Subgroup

DIVISION 31 - EARTHWORK
31 23 23 FILL 4

DIVISION 32 - EXTERIOR IMPROVEMENTS
32 92 19 SEEDING 6

SECTION 01 10 00

SUMMARY

PART 1 GENERAL

1.1 SUMMARY

A. Section Includes:
1. Contract description.
2. Contractor's use of Site
3. Work sequence.
4. Owner occupancy.
5. Permits.
6. Specification conventions.

1.2 CONTRACT DESCRIPTION

A. The Contractor shall furnish all the labor, material and construction equipment and perform all the work for this project as shown on the Drawings and described in the specifications prepared by Spicer Group, Inc. Contractor shall be responsible for the entire work until completed and accepted by the Owner.

1.3 CONTRACTOR'S USE OF SITE

A. Limit use of Site to allow:
1. Owner occupancy.
2. Use of site by Public.

1.4 WORK SEQUENCE

A. Construct Work in a positive direction during the construction period, coordinate construction schedule and operations with Engineer.

1.5 OWNER OCCUPANCY

A. Schedule and substantially complete designated portions of the Work for occupancy before Substantial Completion of the entire Work.

B. Cooperate with Owner to minimize conflict and to facilitate Owner's operations.

1.6 PERMITS

A. Furnish necessary permits for construction of Work.

1.7 SPECIFICATION CONVENTIONS

A. These Specifications are written in imperative mood and streamlined form. This imperative language is directed to Contractor unless specifically noted otherwise. The words "shall be" are included by inference where a colon (:) is used within sentences or phrases.

END OF SECTION

SECTION 01 20 00

PRICE AND PAYMENT PROCEDURES

PART 1 - GENERAL

1.1 SECTION INCLUDES

A. Cash allowances.

B. Application for Payment.

C. Change procedures.

D. Defect assessment.

E. Unit prices.

1.2 ALLOWANCES

A. Costs Included in Cash Allowances: Cost of product to Contractor or Subcontractor, less applicable trade discounts; delivery to Site and applicable taxes unless stated otherwise in Allowance Schedule.

B. Costs Not Included in Cash Allowances but Included in Contract Sum/Price: Product handling at Site including unloading, uncrating, and storage; protection of products from elements and from damage; and labor for installation and finishing unless stated otherwise in Allowance Schedule.

C. Engineer Responsibilities:
   1. Consult with Contractor for consideration and selection of products suppliers and installers.
   2. Select products in consultation with Owner and transmit decision to Contractor.
   3. Prepare Change Order.

D. Contractor Responsibilities:
   1. Assist Engineer in selection of products, suppliers.
   2. Obtain proposals from suppliers and installers and offer recommendations.
   3. Upon notification of selection by Engineer and Owner execute purchase agreement with designated supplier.
   4. Arrange for and process Shop Drawings, Product Data, and Samples. Arrange for delivery.
   5. Promptly inspect products upon delivery for completeness, damage, and defects. Submit claims for transportation damage.

E. Differences in costs will be adjusted by Change Order.

1.3 APPLICATION FOR PAYMENT

A. Contractor will prepare progress payments in accordance with the Payment Schedule shown in the Agreement. Progress payments shall be submitted in AIA Document G702 and G703.

B. Format will follow the itemized bid in the Proposal.

C. Contractor shall submit waivers for each progress payment in accordance with the General Conditions.

D. Payment will be subject to retainage as set forth in Public Act No. 524.

1.4 CHANGE PROCEDURES

A. Submittals: Submit name of individual who is authorized to receive change documents and is responsible for informing others in Contractor's employ or Subcontractors of changes to the Work.

B. Carefully study and compare Contract Documents before proceeding with fabrication and installation of Work. Promptly advise Engineer of any error, inconsistency, omission, or apparent discrepancy.

C. Requests for Interpretation (RFI) and Clarifications: Allot time in construction scheduling for liaison with Engineer; establish procedures for handling queries and clarifications.

D. Engineer will advise of minor changes in the Work not involving adjustment to Contract Sum/Price or Contract Time by issuing a field order.

E. Engineer may issue a Bulletin or Notice of Changer including a detailed description of proposed change with supplementary or revised Drawings and Specifications. Contractor will prepare and submit estimate within (2) two days.

F. Contractor may propose changes by submitting a request for change to Engineer, describing proposed change and its full effect on the Work. Include a statement describing reason for the change and the effect on Contract Sum/Price and Contract Time with full documentation and a statement describing effect on the Work.

G. Stipulated Sum/Price Change Order: Based on Bulletin or Notice of Change and Contractor’s price quotation and Contractor’s request for Change Order as approved by Engineer.

H. Unit Price Change Order: For Contract unit prices and quantities, the Change Order will be executed on a fixed unit price basis. For unit costs or quantities of units of that which are not predetermined, execute Work under Work Directive Change. Changes in Contract Sum/Price or Contract Time will be computed as specified for Time and Material Change Order.

I. Work Directive Change: Engineer may issue directive, signed by Owner, instructing Contractor to proceed with change in the Work, for subsequent inclusion in a Change Order. Document will describe changes in the Work and designate method of determining any change in Contract Sum/Price or Contract Time. Promptly execute change.

J. Time and Material Change Order: Submit itemized account and supporting data after completion of change, within time limits indicated in Conditions of the Contract. Engineer will determine change allowable in Contract Sum/Price and Contract Time as provided in Contract Documents.

K. Maintain detailed records of Work done on time and material basis. Provide full information required for evaluation of proposed changes and to substantiate costs for changes in the Work.

L. Document each quotation for change in Project Cost or Time with sufficient data to allow evaluation of quotation.

M. Change Order Forms: Architects/Engineer's Form.

N. Execution of Change Orders: Engineer will issue Change Orders for signatures of parties as provided in Conditions of the Contract.

1.5 DEFECT ASSESSMENT

A. Replace the Work, or portions of the Work, not conforming to specified requirements.

B. If, in the opinion of Engineer, it is not practical to remove and replace the Work, Engineer will direct appropriate remedy or adjust payment.

C. Authority of Engineer and Owner to assess defects and identify payment adjustments is final.

D. Nonpayment for Rejected Products: Payment will not be made for rejected products.

1.6 UNIT PRICES

A. Authority: Measurement methods are delineated in individual Specification Sections.

B. Measurement methods delineated in individual Specification Sections complement criteria of this Section. In event of conflict, requirements of individual Specification Section govern.

C. Engineer will take measurements and compute quantities accordingly. Provide assistance in taking of measurements.

D. Unit Quantities: Quantities and measurements indicated on Bid Form are for Contract purposes only. Actual quantities provided shall determine payment.

E. Payment Includes: Full compensation for required labor, products, tools, equipment, plant and facilities, transportation, services and incidentals; erection, application, or installation of item of the Work; overhead and profit.

F. Final payment for Work governed by unit prices will be made on basis of actual measurements and quantities accepted by Engineer multiplied by unit sum/price for Work incorporated in or made necessary by the Work.

G. Measurement of Quantities:
   1. Weigh Scales: Inspected, tested, and certified by applicable State weights and measures department within past year.
   2. Platform Scales: Of sufficient size and capacity to accommodate conveying vehicle.
   3. Measurement by Weight: Concrete reinforcing steel, rolled or formed steel, or other metal shapes will be measured by handbook weights. Welded assemblies will be measured by handbook or scale weight.
   4. Measurement by Volume: Measured by cubic dimension using mean length, width, and height or thickness.
   5. Measurement by Area: Measured by square dimension using mean length and width or radius.

6. Linear Measurement: Measured by linear dimension, at item centerline or mean chord.
7. Stipulated Sum/Price Measurement: Items measured by weight, volume, area, or linear means or combination, as appropriate, as completed item or unit of the Work.

PART 2 - PRODUCTS - Not Used

PART 3 - EXECUTION - Not Used

END OF SECTION

SECTION 01 25 00

SUBSTITUTION PROCEDURES

PART 1 - GENERAL

1.1 SECTION INCLUDES

A. Quality assurance.

B. Product options.

C. Product substitution procedures.

1.2 QUALITY ASSURANCE

A. Contract is based on products and standards established in Contract Documents without consideration of proposed substitutions.

B. Products specified define standard of quality, type, function, dimension, appearance, and performance required.

C. Substitution Proposals: Permitted for specified products except where specified otherwise. Do not substitute products unless substitution has been accepted and approved in writing by Owner.

1.3 PRODUCT OPTIONS

A. See Section 01 60 00 - Product Requirements.

1.4 PRODUCT SUBSTITUTION PROCEDURES

A. Engineer will consider requests for substitutions only within **15** days after date of Owner-Contractor Agreement.

B. Substitutions may be considered when a product becomes unavailable through no fault of Contractor.

C. Document each request with complete data, substantiating compliance of proposed substitution with Contract Documents, including:
   1. Manufacturer's name and address, product, trade name, model, or catalog number, performance and test data, and reference standards.
   2. Itemized point-by-point comparison of proposed substitution with specified product, listing variations in quality, performance, and other pertinent characteristics.
   3. Reference to Article and Paragraph numbers in Specification Section.
   4. Cost data comparing proposed substitution with specified product and amount of net change to Contract Sum.
   5. Changes required in other Work.
   6. Availability of maintenance service and source of replacement parts as applicable.
   7. Certified test data to show compliance with performance characteristics specified.
   8. Samples when applicable or requested.
   9. Other information as necessary to assist Engineer's evaluation.

D. A request constitutes a representation that Contractor:
   1. Has investigated proposed product and determined that it meets or exceeds quality level of specified product.
   2. Will provide same warranty for substitution as for specified product.
   3. Will coordinate installation and make changes to other Work that may be required for the Work to be complete with no additional cost to Owner.
   4. Waives claims for additional costs or time extension that may subsequently become apparent.
   5. Will coordinate installation of the accepted substitute, making such changes as may be required for the Work to be complete in all respects.
   6. Will reimburse Owner for review or redesign services associated with reapproval by authorities having jurisdiction.

E. Substitutions will not be considered when they are indicated or implied on Shop Drawing or Product Data submittals without separate written request or when acceptance will require revision to Contract Documents.

F. Substitution Submittal Procedure:
   1. Submit requests for substitutions.
   2. Submit three copies of Request for Substitution for consideration. Limit each request to one proposed substitution.
   3. Submit Shop Drawings, Product Data, and certified test results attesting to proposed product equivalence. Burden of proof is on proposer.
   4. Engineer will notify Contractor in writing of decision to accept or reject request.

PART 2 - PRODUCTS - Not Used

PART 3 - EXECUTION - Not Used

END OF SECTION

SECTION 01 30 00

ADMINISTRATIVE REQUIREMENTS

PART 1 - GENERAL

1.1 SECTION INCLUDES

A. Coordination and Project conditions.

B. Field Engineering

C. Cutting and Patching

D. Preconstruction meeting.

E. Site mobilization meeting.

F. Progress meetings.

G. Preinstallation meetings.

H. Closeout meeting.

I. Alteration procedures.

1.2 COORDINATION AND PROJECT CONDITIONS

A. Coordinate scheduling, submittals, and Work of various Sections of Owner Contract Agreement to ensure efficient and orderly sequence of installation of interdependent construction elements, with provisions for accommodating items installed later.

B. Verify that utility requirements and characteristics of operating equipment are compatible with building utilities. Coordinate Work of various Sections having interdependent responsibilities for installing, connecting to, and placing operating equipment in service.

C. Coordination Meetings: In addition to other meetings specified in this Section, hold coordination meetings with personnel and Subcontractors to ensure coordination of Work.

D. Coordinate completion and clean-up of Work of separate Sections in preparation for Substantial Completion and for portions of Work designated for Owner's partial occupancy.

E. After Owner's occupancy of premises, coordinate access to Site for correction of defective Work and Work not complying with Contract Documents, to minimize disruption of Owner's activities.

1.3 ALLOWANCES

A. Control datum for survey is that established by Owner provided survey shown on Drawings.

B. Engineer will provide construction staking. Call the Engineer to request staking at least 3 working days in advance of the time needed for the work.

C. Construction stakes removed or damaged by Contractor shall be replaced at Contractor's expense.

D. When finished surfaces are cut so that a smoother transition and new work is not possible, terminate existing surface along a straight line at a natural line of division and make recommendation to Engineer.

E. Where a change of plane of 1/4 inch or more occurs, submit recommendation for providing a smooth transition for Engineer review and request instructions from Engineer.

F. Patch or replace portions of existing surfaces which are damaged, lifted, discolored, or showing other imperfections.

G. Finish surfaces as specified in individual product sections.

H. Where there are changes in open drain cross sections, excavate a 20-foot smooth transition between sections.

1.4 CUTTING AND PATCHING

A. Coordinate with Engineer 48 hours prior to cutting and patching.

B. Employ skilled and experienced installer to perform cutting and patching.

C. Submit written request in advance of cutting or altering elements which affects:
   1. Structural integrity of element.
   2. Integrity of weather-exposed or moisture-resistant elements.
   3. Efficiency, maintenance, or safety of element.
   4. Visual quantities of sight-exposed elements.
   5. Work of Owner or separate contractor.

D. Execute cutting, fitting, and patching including excavation and fill, to complete Work, and to:
   1. Fit the several parts together, to integrate with other Work.
   2. Uncover Work to install or correct ill-timed Work.
   3. Remove and replace defective and non-conforming Work.
   4. Remove samples of installed Work for testing.

E. Execute work by methods which will avoid damage to other Work, and provide proper surfaces to receive patching and finishing.

F. Cut rigid materials using masonry saw or core drill.

G. Restore Work with new products in accordance with requirements of Contract Documents.

H. Fit Work tight to pipes, sleeves, ducts, conduit, and other penetrations through surfaces.

I. Refinish surfaces to match adjacent finishes. For continuous surfaces, refinish to nearest intersection; for an assembly, refinish entire unit.

J. Identify any hazardous substance or condition exposed during the Work to the Engineer for decision or remedy.

1.5 PRECONSTRUCTION MEETING

A. Engineer will schedule and preside over meeting after Notice of Award.

B. Attendance Required: Engineer, Owner, appropriate governmental agency representatives, applicable public and private utility companies and Contractor, subcontractors to be utilized on the project.

1.6 PROGRESS MEETINGS

A. Schedule and administer meetings throughout progress of the Work, if required.

B. Engineer will make arrangements for meetings, prepare agenda with copies for participants, and preside over meetings.

C. Attendance Required: Job superintendent, major Subcontractors, Contractors and suppliers, and Engineer, Owner, as appropriate to agenda topics for each meeting.

PART 2 - PRODUCTS - Not Used

PART 3 - EXECUTION

3.1 ALTERATION PROCEDURES

A. Entire facility will be occupied for normal operations during progress of construction. Cooperate with Owner in scheduling operations to minimize conflict and to permit continuous usage.
   1. Perform Work not to interfere with operations of occupied areas.
   2. Keep utility and service outages to a minimum and perform only after written approval of Owner.
   3. Clean Owner-occupied areas daily. Clean spillage, overspray, and heavy collection of dust in Owner-occupied areas immediately.

B. Materials: As specified in product Sections.

C. Employ skilled and experienced installer to perform alteration and renovation Work.

D. Cut, move, or remove items as necessary for access to alterations and renovation Work. Replace and restore at completion. Comply with Section 01 70 00 - Execution and Closeout Requirements

E. Remove unsuitable material not marked for salvage, including rotted wood, corroded metals, and deteriorated masonry and concrete. Replace materials as specified for finished Work.

F. Remove debris and abandoned items from area and from concealed spaces.

G. Prepare surface and remove surface finishes to permit installation of new Work and finishes.

H. Close openings in exterior surfaces to protect existing Work from weather and extremes of temperature and humidity.

I. Remove, cut, and patch Work to minimize damage and to permit restoring products and finishes to original or specified condition.

J. Refinish existing visible surfaces to remain in renovated rooms and spaces, to specified or new condition for each material, with neat transition to adjacent finishes.

K. Where new Work abuts or aligns with existing Work, provide smooth and even transition. Patch Work to match existing adjacent Work in texture and appearance.

L. When finished surfaces are cut so that smooth transition with new Work is not possible, terminate existing surface along straight line at natural line of division and submit recommendation to Engineer for review.

M. Where change of plane of 1/4 inch or more occurs, submit recommendation for providing smooth transition to Engineer for review.

N. Patch or replace portions of existing surfaces that are damaged, lifted, discolored, or showing other imperfections.

O. Finish surfaces as specified in individual product Sections.

END OF SECTION

SECTION 01 33 00

SUBMITTAL PROCEDURES

PART 1 - GENERAL

1.1 SECTION INCLUDES

A. Definitions.

B. Submittal procedures.

C. Construction progress schedules.

D. Proposed product list.

E. Product data.

F. Shop Drawings.

G. Samples.

H. Other submittals.

I. Test reports.

J. Certificates.

K. Manufacturer's instructions.

L. Manufacturer's field reports.

M. Erection Drawings.

N. Contractor review.

O. Engineer review.

1.2 DEFINITIONS

A. Action Submittals: Written and graphic information and physical samples that require Engineer's responsive action.

B. Informational Submittals: Written and graphic information and physical Samples that do not require Engineer's responsive action. Submittals may be rejected for not complying with requirements.

1.3 SUBMITTAL PROCEDURES

A. Transmit each submittal with Engineer-accepted form.

B. Sequentially number transmittal forms. Mark revised submittals with original number and sequential alphabetic suffix.

C. Identify: Project, Contractor, Subcontractor and supplier, pertinent Drawing and detail number, and Specification Section number appropriate to submittal.

D. Apply Contractor's stamp, signed or initialed, certifying that review, approval, verification of products required, field dimensions, adjacent construction Work, and coordination of information is according to requirements of the Work and Contract Documents.

E. Schedule submittals to expedite Project, and deliver to Engineer. Coordinate submission of related items.

F. For each submittal for review, allow 15 days excluding delivery time to and from Contractor.

G. Revise and resubmit submittals as required, identify all changes made since precious submittal.

H. Identify variations in Contract Documents and product or system limitations that may be detrimental to successful performance of completed Work.

I. Allow space on submittals for Contractor and Engineer review stamps.

J. When revised for resubmission, identify changes made since previous submission.

K. Distribute copies of reviewed submittals as appropriate. Instruct parties to promptly report inability to comply with requirements.

1.4 CONSTRUCTION PROGRESS SCHEDULES

A. Submit initial progress schedule in duplicate within 15 days after date established in Notice to Proceed for Engineer and Owner review.

B. Revise and resubmit as required.

C. Submit revised schedules with each Application for Payment, identifying changes since previous version.

D. Submit horizontal bar chart with separate line for each major section of Work or operation, identifying first workday of each week.

E. Show complete sequence of construction by activity, identifying Work of separate stages and other logically grouped activities. Indicate the early and late start, early and late finish, float dates, and duration.

F. Indicate estimated percentage of completion for each item of Work at each submission.

G. Indicate submittal dates required for shop drawings, product data, samples, and product delivery dates, including those furnished by Owner and under Allowances.

1.5 PROPOSED PRODUCT LIST

A. Within 5 days after date of Owner-Contractor Agreement, submit list of major products proposed for use, with name of manufacturer, trade name, and model number of each product.

B. For products specified only by reference standards, indicate manufacturer, trade name, model or catalog designation, and reference standards.

1.6 PRODUCT DATA

A. Product Data: Action Submittal: Submit to Engineer for review for assessing conformance with information given and design concept expressed in Contract Documents.

B. Submit number of copies Contractor requires, plus three copies Engineer will retain.

C. Mark each copy to identify applicable products, models, options, and other data. Supplement manufacturers' standard data to provide information specific to this Project.

D. After review, produce copies and distribute according to "Submittal Procedures" Article and for record documents described in Section 01 70 00 - Execution and Closeout Requirements.

1.7 SHOP DRAWINGS

A. Shop Drawings: Action Submittal: Submit to Engineer for assessing conformance with information given and design concept expressed in Contract Documents.

B. Indicate special utility and electrical characteristics, utility connection requirements, and location of utility outlets for service for functional equipment and appliances.

C. When required by individual Specification Sections, provide Shop Drawings signed and sealed by a professional Engineer responsible for designing components shown on Shop Drawings.
   1. Include signed and sealed calculations to support design.
   2. Submit Shop Drawings and calculations in form suitable for submission to and approval by authorities having jurisdiction.
   3. Make revisions and provide additional information when required by authorities having jurisdiction.

D. Submit number of opaque reproductions Contractor requires, plus two copies Engineer will retain.

E. After review, produce copies and distribute according to "Submittal Procedures" Article and for record documents described in Section 01 70 00 - Execution and Closeout Requirements.

1.8 SAMPLES

A. Samples: Action Submittal: Submit to Engineer for assessing conformance with information given and design concept expressed in Contract Documents.

B. Samples for Selection as Specified in Product Sections:
   1. Submit to Engineer for aesthetic, color, and finish selection.
   2. Submit Samples of finishes, textures, and patterns for Engineer selection.

C. Submit Samples to illustrate functional and aesthetic characteristics of products, with integral parts and attachment devices. Coordinate Sample submittals for interfacing work.

D. Include identification on each Sample, with full Project information.

E. Submit number of Samples specified in individual Specification Sections; Engineer will retain one Sample.

F. Reviewed Samples that may be used in the Work are indicated in individual Specification Sections.

G. Samples will not be used for testing purposes unless specifically stated in Specification Section.

H. After review, produce copies and distribute according to "Submittal Procedures" Article and for record documents described in Section 01 70 00 - Execution and Closeout Requirements.

1.9 OTHER SUBMITTALS

A. Closeout Submittals: Comply with Section 01 70 00 - Execution and Closeout Requirements.

B. Informational Submittal: Submit data for Engineer's knowledge for Owner.

C. Submit information for assessing conformance with information given and design concept expressed in Contract Documents.

1.10 TEST REPORTS

A. Informational Submittal: Submit reports for Engineer's knowledge for Owner.

B. Submit test reports for information for assessing conformance with information given and design concept expressed in Contract Documents.

1.11 CERTIFICATES

A. Informational Submittal: Submit certification when specified in individual specification sections from manufacturer, installation/application Subcontractor, or Contractor to Engineer, in quantities specified for Product Data.

B. Indicate material or product conforms to or exceeds specified requirements. Submit supporting reference data, affidavits, and certifications as appropriate.

C. Certificates may be recent or previous test results on material or product but must be acceptable to Engineer.

1.12 MANUFACTURER'S INSTRUCTIONS

A. Informational Submittal: Submit manufacturer's installation instructions for Engineer's knowledge as Contract administrator or for Owner.

B. Submit printed instructions for delivery, storage, assembly, installation, startup, adjusting, and finishing, to Engineer in quantities specified for Product Data.

C. Indicate special procedures, perimeter conditions requiring special attention, and special environmental criteria required for application or installation.

1.13 MANUFACTURER'S FIELD REPORTS

A. Informational Submittal: Submit reports for Engineer's knowledge for Owner.

B. Submit report in duplicate within 5 days of observation to Engineer for information.

C. Submit reports for information for assessing conformance with information given and design concept expressed in Contract Documents.

D. Identify conflicts between manufacturer’s instructions and Contract Documents.

1.14 ERECTION DRAWINGS

A. Informational Submittal: Submit Drawings for Engineer's knowledge for Owner.

B. Submit Drawings for information assessing conformance with information given and design concept expressed in Contract Documents.

C. Data indicating inappropriate or unacceptable Work may be subject to action by Engineer or Owner.

1.15 CONTRACTOR REVIEW

A. Review for compliance with Contract Documents and approve submittals before transmitting to Engineer.

B. Contractor: Responsible for:
1. Determination and verification of materials including manufacturer's catalog numbers.
2. Determination and verification of field measurements and field construction criteria.
3. Checking and coordinating information in submittal with requirements of Work and of Contract Documents.
4. Determination of accuracy and completeness of dimensions and quantities.
5. Confirmation and coordination of dimensions and field conditions at Site.
6. Construction means, techniques, sequences, and procedures.
7. Safety precautions.
8. Coordination and performance of Work of all trades.

C. Stamp, sign or initial, and date each submittal to certify compliance with requirements of Contract Documents.

D. Do not fabricate products or begin Work for which submittals are required until approved submittals have been received from Engineer.

1.16 ENGINEER REVIEW

A. Do not make "mass submittals" to Engineer. "Mass submittals" are defined as six or more submittals or items in one day or 15 or more submittals or items in one week. If "mass submittals" are received, Engineer's review time stated above will be extended as necessary to

perform proper review. Engineer will review "mass submittals" based on priority determined by Engineer after consultation with Owner and Contractor.

B. Informational submittals and other similar data are for Engineer's information, do not require Engineer's responsive action, and will not be reviewed or returned with comment.

C. Submittals made by Contractor that are not required by Contract Documents may be returned without action.

D. Submittal approval does not authorize changes to Contract requirements unless accompanied by Change Order.

PART 2 - PRODUCTS - Not Used

PART 3 - EXECUTION - Not Used

END OF SECTION

SECTION 01 40 00

QUALITY REQUIREMENTS

PART 1 - GENERAL

1.1 SECTION INCLUDES

A. Quality control.

B. Tolerances.

C. References.

D. Field Samples.

E. Labeling.

F. Testing and inspection services.

G. Bench marks and control elevations.

H. Manufacturers' field services.

1.2 QUALITY CONTROL

A. Monitor quality control over suppliers, manufacturers, products, services, Site conditions, and workmanship, to produce Work of specified quality.

B. Comply fully with manufacturers' instructions, including each step in sequence.

C. Should manufacturer's instructions conflict with Contract Documents, requires clarification form Engineer before proceeding.

D. Comply with specified standards as the minimum quality for the Work except where more stringent tolerances, codes, or specified requirements indicate higher standards or more precise workmanship.

E. Perform Work using persons qualified to produce required and specified quality.

F. Products, materials, and equipment may be subject to inspection by Engineer and Owner at place of manufacture or fabrication. Such inspections shall not relieve Contractor of complying with requirements of Contract Documents.

G. Supervise performance of Work in such manner and by such means to ensure that Work, whether completed or in progress, will not be subjected to harmful, dangerous, damaging, or otherwise deleterious exposure during construction period.

H. Secure Products in place with positive anchorage devices designed and sized to withstand stresses, vibration, physical distortion or disfigurement.

1.3 TOLERANCES

A. Monitor fabrication and installation tolerance control of products to produce acceptable Work. Do not permit tolerances to accumulate.

B. Comply with manufacturers' recommended tolerances and tolerance requirements in reference standards. When such tolerances conflict with Contract Documents, request clarification from Engineer before proceeding.

C. Adjust products to appropriate dimensions; position before securing products in place.

1.4 REFERENCES

A. For products or workmanship specified by association, trade, or other consensus standards, comply with requirements of standard except when more rigid requirements are specified or are required by applicable codes.

B. Conform to reference standard by date of issue current as of date of Contract Documents except where specific date is established by code.

C. Obtain copies of standards and maintain on Site when required by product Specification Sections.

D. When requirements of indicated reference standards conflict with Contract Documents, request clarification from Engineer before proceeding.

E. Neither contractual relationships, duties, or responsibilities of parties in Contract nor those of Engineer shall be altered from Contract Documents by mention or inference in reference documents.

1.5 FIELD SAMPLES

A. Acceptable samples represent a quality level for the Work.

1.6 LABELING

A. Attach label from agency approved by authorities having jurisdiction for products, assemblies, and systems required to be labeled by applicable code.

B. Label Information: Include manufacturer's or fabricator's identification, approved agency identification, and the following information, as applicable, on each label:
   1. Model number.
   2. Serial number.
   3. Performance characteristics.

C. Manufacturer's Nameplates, Trademarks, Logos, and Other Identifying Marks on Products: Not allowed on surfaces exposed to view in public areas, interior or exterior.

1.7 TESTING AND INSPECTION SERVICES

A. Contractor will employ and pay for services of Engineer to perform materials inspection and testing including compaction.

B. Then Engineer will perform inspections, tests, and other services specified in individual specification sections and as required.

C. Reports will be submitted by Engineer, indicating observations and results of tests and indicating compliance or non-compliance with Contract Documents.

D. Cooperate with the Engineer; furnish samples of materials, design mix, equipment, tools, storage and assistance as requested.
   1. Make arrangements with the Engineer and pay for additional samples and tests required for Contractor's use.

E. Retesting required because of non-conformance to specified requirements shall be performed by the same Engineer. Payment for retesting will be charged to the Contractor.

1.8 BENCHMARKS AND CONTROL ELEVATIONS

A. Elevations for proposed work shall be from bench marks established for this project.

B. Verify elevations of existing features against project benchmarks.

C. Notify Engineer of conflicts in elevations, which affect the proposed work.

1.9 MANUFACTURER'S FIELD SERVICES

A. When specified in individual Specification Sections, require material or product suppliers or manufacturers to provide qualified staff personnel to observe Site conditions, conditions of surfaces and installation, quality of workmanship, startup of equipment, testing, adjusting, and balancing of equipment commissioning and as applicable, and to initiate instructions when necessary.

B. Submit qualifications of observer to Engineer 30 days in advance of required observations. Observer is subject to approval of Engineer.

C. Report observations and Site decisions or instructions given to applicators or installers that are supplemental or contrary to manufacturer's written instructions.

D. Refer to Section 01 33 00 - Submittal Procedures, "Manufacturer's Field Reports" Article.

PART 2 - PRODUCTS - Not Used

PART 3 - EXECUTION - Not Used

END OF SECTION

SECTION 01 50 00

TEMPORARY FACILITIES AND CONTROLS

PART 1 - GENERAL

1.1 SECTION INCLUDES

A. Temporary Electricity:

B. Construction Facilities:
   1. Parking.
   2. Progress cleaning and waste removal.
   3. Fire-prevention facilities.

C. Temporary Controls:
   1. Barriers.
   2. Water control.
   3. Dust control.
   4. Erosion and sediment control.
   5. Noise control.
   6. Pest and rodent control.
   7. Pollution control.

D. Removal of utilities, facilities, and controls.

E. Protection of Installed Work.

F. Protection of Existing.

G. Progress Cleaning.

1.2 TEMPORARY ELECTRICITY

A. Provide and pay for power service required from utility source as needed for construction operation.

B. Complement existing power service capacity and characteristics as required for construction operations.

C. Provide power outlets with branch wiring and distribution boxes located as required for construction operations. Provide suitable, flexible power cords as required for portable construction tools and equipment.

D. Provide main service disconnect and overcurrent protection at convenient location switch at source distribution equipment meter.

E. Permanent convenience receptacles may be used during construction.

1.3 PARKING

A. Maintenance:
   1. Maintain traffic and parking areas in sound condition free of excavated material, construction equipment, products, mud, snow, ice, and the like.
   2. Maintain existing and permanent paved areas used for construction; promptly repair breaks, potholes, low areas, standing water, and other deficiencies, to maintain paving and drainage in original condition.

B. Removal, Repair:
   1. Remove temporary materials and construction at Substantial Completion.
   2. Remove underground Work and compacted materials to depth of 2 feet fill and grade Site as indicated.
   3. Repair existing and permanent facilities damaged by use, to original condition.

C. Mud from Site vehicles: Provide means of removing mud from vehicle wheels before entering streets.

1.4 PROGRESS CLEANING AND WASTE REMOVAL

A. Maintain areas free of waste materials, debris, and rubbish. Maintain Site in clean and orderly condition.

B. Remove debris and rubbish from pipe chases, plenums, attics, crawl spaces, and other closed or remote spaces, before enclosing spaces.

C. Broom and vacuum clean interior areas before starting surface finishing, and continue cleaning to eliminate dust.

D. Collect and remove waste materials, debris, and rubbish from Site and dispose of off-Site.

E. Open free-fall chutes are not permitted. Terminate closed chutes into appropriate containers with lids.

1.5 FIRE-PREVENTION FACILITIES

A. Prohibit smoking within buildings under construction and demolition. Designate area on Site where smoking is permitted. Provide approved ashtrays in designated smoking areas.

B. Establish fire watch for cutting, welding, and other hazardous operations capable of starting fires. Maintain fire watch before, during, and after hazardous operations until threat of fire does not exist.

C. Standpipes: Maintain existing standpipes in usable condition to height within one floor of floor being demolished.

D. Portable Fire Extinguishers: NFPA 10; 10-pound capacity, 4A-60B: C UL rating.
   1. Provide one fire extinguisher at each stairway on each floor of buildings under construction and demolition.
   2. Provide minimum of one fire extinguisher in every construction trailer and storage shed.

3. Provide minimum of one fire extinguisher on roof during roofing operations using heat-producing equipment.

1.6 BARRIERS

A. Provide barriers to prevent unauthorized entry to construction areas and to protect existing facilities and adjacent properties from damage from construction operations and demolition.

B. Provide barricades and covered walkways required by authorities having jurisdiction for public rights-of-way and for public access to existing building.
   1. Barricade Construction: As indicated on Drawings.
   2. Covered Walkway Construction: As indicated on Drawings.

C. Tree and Plant Protection: Preserve and protect existing trees and plants designated to remain.
   1. Protect areas within drip lines from traffic, parking, storage, dumping, chemically injurious materials and liquids, ponding, and continuous running water.
   2. Provide 6 foot-high barriers around drip line, with access for maintenance.
   3. Replace trees and plants damaged by construction operations.

D. Protect non-owned vehicular traffic, stored materials, Site, and structures from damage.

E. Provide access to all adjacent buildings for use during construction.

1.7 WATER CONTROL

A. Grade Site to drain. Maintain excavations free of water. Provide, operate, and maintain necessary pumping equipment.

B. Protect Site from puddles or running water. Provide water barriers as required to protect Site from soil erosion.

C. Trenches shall be dewatered to provide a stable base for structures and piping.

1.8 DUST CONTROL

A. Execute Work by methods that minimize raising dust from construction operations.

B. Provide positive means to prevent airborne dust from dispersing into atmosphere and into Owner-occupied areas.

1.9 EROSION AND SEDIMENT CONTROL

A. Conform to Part 91 of Public Act 451 of 1994, relative to Soil Erosion and Sedimentation Control for the life of the project.

B. Minimize amount of bare soil exposed at one time.

C. Provide temporary measures such as berms, dikes, and drains to prevent sediment from entering adjacent waterways.

D. Do not deposit trash, debris, or sediment in tile or open drains.

E. Immediately repair trenches located within the traveled surface of roadways.

F. Landscape construction areas as soon as practical after work is complete according to Sections 32 91 19 – Landscape Grading, 32 92 19 – Seeding.

1.10 NOISE CONTROL

A. Provide methods, means, and facilities to minimize noise produced by construction operations.

1.11 PEST AND RODENT CONTROL

A. Provide methods, means, and facilities to prevent pests and insects from damaging the Work and entering facility.

B. Provide methods, means, and facilities to prevent rodents from accessing or invading premises.

1.12 POLLUTION CONTROL

A. Provide methods, means, and facilities to prevent contamination of soil, water, and atmosphere from discharge of noxious, toxic substances and pollutants produced by construction operations.

B. Comply with pollution and environmental control requirements of authorities having jurisdiction.

1.13 REMOVAL OF UTILITIES, FACILITIES, AND CONTROLS

A. Remove temporary utilities, equipment, facilities, and materials before Substantial Completion inspection.

B. Remove underground installations to minimum depth of 4 feet. Grade Site as indicated on Drawings.

C. Clean and repair damage caused by installation or use of temporary Work.

D. Restore existing and permanent facilities used during construction to original condition. Restore permanent facilities used during construction to specified condition.

E. A sufficient sum of money to remove and replace or repair any utilities damaged or relocated during the construction of the project shall be included in total contract amount.

1.14 PROTECTION OF INSTALLED WORK

A. Protect installed work and provide special protection where specified in individual specification Sections.

B. Provide temporary and removable protection for installed Products. Control activity in immediate work area to minimize damage.

C. Prohibit traffic from landscaped areas.

1.15 PROTECTION OF EXISTING

A. CALL "MISS DIG" 811 or (1-800-482-7171) A MINIMUM OF THREE WORKING DAYS PRIOR TO CONSTRUCTION.

B. Obtain a copy of Positive Response. Contact Miss Dig for additional assistance if there are any utilities not marked or cleared through the Positive Response System.

C. Contact Miss Dig for additional assistance if there is a discrepancy in the field from the Positive Response System.

D. Contact Miss Dig for additional assistance if utility is not found within the applicable "approximate locations" marked in the field.

E. Protect landscaped areas. Damaged areas shall be replaced in kind.

F. Protect utilities encountered during the work. Replace or repair damaged utilities.

G. Protect drives, roadways, and sidewalks. Repair as required in following sections.

H. Protect mailboxes. Relocate temporarily until mailboxes can be returned to original location. All mail boxes and posts must be returned to their original condition or better at no additional cost to the project.

I. Protect trees, shrubs, and bushes:
   1. Where trees, shrubs, and bushes are too large to be replaced in kind, the proposed utility shall be installed in a boring or tunneling operation unless written consent is given by the property owner for removal. Owner and Engineer shall each be given one copy of consent letters.
   2. Where requested by the Property Owner, timber from removed trees shall be cut into 6 foot lengths and stockpiled along the work or as specified in the consent letter.
   3. Proper disposal of removed trees or sections of removed trees not wanted by the property owner shall become the responsibility of the Contractor.
   4. Trees, shrubs, and bushes that are removed and replaced shall be transplanted by an established nursery.

J. Utilities must remain in service. If it becomes necessary to interrupt a utility service, the utility authority must be notified immediately and steps taken to restore temporary or permanent service as soon as possible.

K. Maintain outlets for drains. Provide temporary pumping if necessary.

L. Expose utility mains and services by hand in the trench.

M. Where utility and drainage piping crosses the trench, support he piping according to the utility authority's standards and backfill to the top with compacted sand.

1.16 PROGRESS CLEANING

A. Maintain areas free of waste materials, debris, and rubbish. Maintain site in a clean and orderly condition.

B. Clean road surface daily to the Owner's and/or Engineer's satisfaction.

C. Complete leveling, remove excess material and debris and restore drainage not more than 1000 feet behind construction.

D. A sufficient sum of money to remove and replace or repair any utilities damaged or relocated during the construction of the project shall be included in total contract amount.

PART 2 - PRODUCTS - Not Used

PART 3 - EXECUTION - Not Used

END OF SECTION

SECTION 01 60 00

PRODUCT REQUIREMENTS

PART 1 GENERAL

1.1 SECTION INCLUDES

A. Products.

B. Product delivery requirements.

C. Product storage and handling requirements.

D. Product options.

1.2 PRODUCTS

A. At minimum, comply with specified requirements and reference standards.

B. Specified products define standard of quality, type, function, dimension, appearance, and performance required.

C. Furnish products of qualified manufacturers that are suitable for intended use. Furnish products of each type by single manufacturer unless specified otherwise. Confirm that manufacturer's production capacity can provide sufficient product, on time, to meet Project requirements.

D. Domestic Products: Except where specified otherwise, domestic products are required and interpreted to mean products mined, manufactured, fabricated, or produced in United States or its territories.

E. Do not use materials and equipment removed from existing premises except as specifically permitted by Contract Documents.

F. Furnish interchangeable components from same manufacturer for components being replaced.

1.3 PRODUCT DELIVERY REQUIREMENTS

A. Transport and handle products according to manufacturer's instructions.

B. Promptly inspect shipments to ensure products comply with requirements, quantities are correct, and products are undamaged.

C. Provide equipment and personnel to handle products; use methods to prevent soiling, disfigurement, or damage.

1.4 PRODUCT STORAGE AND HANDLING REQUIREMENTS

A. Store and protect products according to manufacturer's instructions.

B. Store products with seals and labels intact and legible.

C. Store sensitive products in weathertight, climate-controlled enclosures in an environment suitable to product.

D. For exterior storage of fabricated products, place products on sloped supports aboveground.

E. Provide off-Site storage and protection when Site does not permit on-Site storage or protection.

F. Cover products subject to deterioration with impervious sheet covering. Provide ventilation to prevent condensation and degradation of products.

G. Store loose granular materials on solid flat surfaces in well-drained area. Prevent mixing with foreign matter.

H. Provide equipment and personnel to store products; use methods to prevent soiling, disfigurement, or damage.

I. Arrange storage of products to permit access for inspection. Periodically inspect to verify products are undamaged and are maintained in acceptable condition.

1.5 PRODUCT OPTIONS

A. Products Specified by Reference Standards or by Description Only: Products complying with specified reference standards or description.

B. Products Specified by Naming One or More Manufacturers: Products of one of manufacturers named and complying with Specifications; no options or substitutions allowed.

C. Products Specified by Naming One or More Manufacturers with Provision for Substitutions: Submit Request for Substitution for any manufacturer not named, according to Section 01 25 00 - Substitution Procedures.

PART 2 PRODUCTS – Not Used

PART 3 EXECUTION - Not Used

END OF SECTION

SECTION 01 70 00

EXECUTION AND CLOSEOUT REQUIREMENTS

PART 1 GENERAL

1.1 SECTION INCLUDES

A. Field engineering.

B. Closeout procedures.

C. Project record documents.

D. Maintenance service

E. Warranties

F. Progress Payments.

G. Examination.

H. Preparation.

I. Execution.

J. Cutting and patching.

K. Protecting installed construction.

L. Final cleaning.

1.2 FIELD ENGINEERING

A. Engineer will locate and Contractor shall protect survey control and reference points. Promptly notify Engineer of discrepancies discovered.

B. Control datum for survey is established by Owner-provided survey indicated on Drawings.

C. Prior to beginning Work, verify and establish floor elevations of existing facilities to ensure that new Work will meet existing elevations in smooth and level alignment except where specifically detailed or indicated otherwise.

D. Verify setbacks and easements; confirm Drawing dimensions and elevations.

E. Field engineering services provided by Engineer includes: Establish elevations, lines, and levels using recognized engineering survey practices.

F. Maintain complete and accurate log of control and survey Work as Work progresses.

G. Protect survey control points prior to starting Site Work; preserve permanent reference points during construction.

H. Promptly report to Engineer loss or destruction of reference point or relocation required because of changes in grades or other reasons.

I. Replace dislocated survey control points based on original survey control. Make no changes without prior written notice to Engineer.

1.3 CLOSEOUT PROCEDURES

A. Submit written certification that Contract Documents have been reviewed. Work has been inspected, and that Work is complete in accordance with Contract Documents and ready for Engineer’s inspection.

B. Provide submittals to Engineer that are required by governing or other authorities.\

C. Provide Consent of Surety and all Final Waivers.

1.4 FINAL CLEANING

A. Execute final cleaning prior to final inspection.

B. Remove sediment from storm sewers, and catch basins.

C. Clean site; sweep paved areas, rake clean landscaped surfaces.

D. Remove waste and surplus materials, rubbish, and construction facilities from the site.

E. Landscape areas as required in documents.

F. Restore roads, driveways, parking areas, lawns, drainage, and other items disturbed during construction to original condition or as required by the documents.

1.5 PROJECT RECORD DOCUMENTS

A. Maintain on Site one set of the following record documents; record actual revisions to the Work:
   1. Drawings.
   2. Specifications.
   3. Addenda.
   4. Change Orders and other modifications to the Contract.
   5. Reviewed Shop Drawings, product data, and Samples.
   6. Manufacturer's instruction for assembly, installation, and adjusting.

B. Store record documents separate from documents used for construction.

C. Record information concurrent with construction progress.

D. Specifications: Legibly mark and record, at each product Section, description of actual products installed, including the following:
   1. Manufacturer's name and product model and number.
   2. Product substitutions or alternates used.

3. Changes made by Addenda and modifications.

E. Record Drawings and Shop Drawings: Legibly mark each item to record actual construction as follows:
   1. Include Contract modifications such as Addenda, supplementary instructions, change directives, field orders, minor changes in the Work, and change orders.
   2. Include locations of concealed elements of the Work.
   3. Identify depth of buried utility lines and provide dimensions showing distances from permanent facility components that are parallel to utilities.
   4. Dimension ends, corners, and junctions of buried utilities to permanent facility components using triangulation.
   5. Identify and locate existing buried or concealed items encountered during Project.
   6. Measured horizontal and vertical locations of underground utilities and appurtenances, referenced to permanent surface improvements.
   7. Measured locations of internal utilities and appurtenances concealed in construction, referenced to visible and accessible features of the Work.
   8. Field changes of dimension and detail.
   9. Details not on original Drawings.

F. Submit marked-up paper copy documents to Engineer before Substantial Completion.

1.6 MAINTENANCE SERVICE

A. Furnish service and maintenance of components indicated in Specification Sections for 1 year from date of Substantial Completion.

B. Examine system components at frequency consistent with reliable operation. Clean, adjust, and lubricate as required.

C. Include systematic examination, adjustment, and lubrication of components. Repair or replace parts whenever required. Use parts produced by manufacturer of original component.

D. Do not assign or transfer maintenance service to agent or Subcontractor without prior written consent of Owner.

1.7 WARRANTIES

A. Execute and assemble documents from Sub-contractors, suppliers, and manufacturers.

B. Provide Table of Contents and assemble in three D size ring three ring binder with durable plastic cloth cover.

C. Submit prior to final Application for Payment.

D. Warranty all work for a period of one year from the date of the final progress payment.

1.8 PROGRESS PAYMENTS

A. The Owner may request from the Contractor waivers for proof of payment to all sub-contractors and suppliers utilized on this project prior to issuing payments.

B. The Owner may request from the Contractor a Sworn Statement listing all sub-contractors and suppliers, their involvement with the project, their subcontracted amount, amount paid to date, and balance due prior to issuing payment.

C. Failure to provide this information may result in not receiving payments or payments not being issued in a timely manner.

1.9 CORRECTION PERIOD

A. For the period of one year from the date of final payment, promptly correct work or replace materials that are found to be defective.

PART 2 PRODUCTS - Not Used

PART 3 EXECUTION

3.1 EXAMINATION

A. Verify that existing Site conditions and substrate surfaces are acceptable for subsequent Work. Beginning new Work means acceptance of existing conditions.

B. Verify that existing substrate is capable of structural support or attachment of new Work being applied or attached.

C. Examine and verify specific conditions described in individual Specification Sections.

D. Verify that utility services are available with correct characteristics and in correct locations.

3.2 PREPARATION

A. Clean substrate surfaces prior to applying next material or substance according to manufacturer's instructions.

B. Seal cracks or openings of substrate prior to applying next material or substance.

C. Apply manufacturer-required or -recommended substrate primer, sealer, or conditioner prior to applying new material or substance in contact or bond.

3.3 EXECUTION

A. Comply with manufacturer's installation instructions, performing each step in sequence. Maintain one set of manufacturer's installation instructions at Project Site during installation and until completion of construction.

B. When manufacturer's installation instructions conflict with Contract Documents, request clarification from Engineer before proceeding.

C. Verify that field measurements are as indicated on approved Shop Drawings or as instructed by manufacturer.

D. Secure products in place with positive anchorage devices designed and sized to withstand stresses, vibration, physical distortion, or disfigurement.
   1. Secure Work true to line and level and within specified tolerances, or if not specified, industry-recognized tolerances.
   2. Physically separate products in place, provide electrical insulation, or provide protective coatings to prevent galvanic action or corrosion between dissimilar metals.
   3. Exposed Joints: Provide uniform joint width and arrange to obtain best visual effect. Refer questionable visual-effect choices to Engineer for final decision.

E. Allow for expansion of materials and building movement.

F. Climatic Conditions and Project Status: Install each unit of Work under conditions to ensure best possible results in coordination with entire Project.
   1. Isolate each unit of Work from incompatible Work as necessary to prevent deterioration.
   2. Coordinate enclosure of Work with required inspections and tests to minimize necessity of uncovering Work for those purposes.

G. Mounting Heights: Where not indicated, mount individual units of Work at industry recognized standard mounting heights for particular application indicated.
   1. Refer questionable mounting heights choices to Engineer for final decision.
   2. Elements Identified as Accessible to Handicapped: Comply with applicable codes and regulations.

H. Adjust operating products and equipment to ensure smooth and unhindered operation.

I. Clean and perform maintenance on installed Work as frequently as necessary through remainder of construction period. Lubricate operable components as recommended by manufacturer.

3.4 PROTECTING INSTALLED CONSTRUCTION

A. Protect installed Work and provide special protection where specified in individual Specification Sections.

B. Provide temporary and removable protection for installed products. Control activity in immediate Work area to prevent damage.

C. Provide protective coverings at walls, projections, jambs, sills, and soffits of openings.

D. Use durable sheet materials to protect finished floors, stairs, and other surfaces from traffic, dirt, wear, damage, or movement of heavy objects.

E. Prohibit traffic or storage upon waterproofed or roofed surfaces. When traffic or activity is necessary, obtain recommendations for protection from waterproofing or roofing material manufacturer.

F. Prohibit traffic from landscaped areas.

END OF SECTION

SECTION 02 41 19.13

SELECTIVE BUILDING DEMOLITION

PART 1 - GENERAL

1.1 SUMMARY

A. Section Includes:
   1. Demolishing designated building equipment and fixtures.
   2. Demolishing designated construction.
   3. Cutting and alterations for completion of the Work.
   4. Protecting items designated to remain.
   5. Removing demolished materials.

1.2 SUBMITTALS

A. Section 01 33 00 - Submittal Procedures: Requirements for submittals.

B. Demolition Schedule: Indicate overall schedule and interruptions required for utility and building services.

C. Shop Drawings:
   1. Indicate demolition and removal sequence.
   2. Indicate location and construction of temporary work.

1.3 CLOSEOUT SUBMITTALS

A. Section 01 70 00 - Execution and Closeout Requirements: Requirements for submittals.

B. Project Record Documents: Accurately record actual locations of capped utilities, concealed utilities discovered during demolition.

C. Operation and Maintenance Data: Submit description of system, inspection data, and parts lists.

1.4 QUALITY ASSURANCE

A. Conform to applicable building code for demolition work, dust control, products requiring electrical disconnection and re-connection.

B. Conform to General Specifications for Lead-Based Paint Abatement.

C. Conform to applicable building code for procedures when hazardous or contaminated materials are discovered.

D. Obtain required permits from authorities having jurisdiction.

E. Perform Work in accordance with Municipality standard.

F. Maintain one copy of each document on site.

1.5 SEQUENCING

A. Section 01 10 00 - Summary: Requirements for sequencing.

B. Owner will conduct salvage operations before demolition begins to remove materials Owner chooses to retain.

C. If necessary, the Contractor shall abate all lead-based paint in areas of demolition. See General Specification for Lead-Based Paint Abatement.

1.6 SCHEDULING

A. Section 01 30 00 - Administrative Requirements: Requirements for scheduling.

B. Schedule Work to coincide with new construction.

C. Cooperate with Owner in scheduling noisy operations and waste removal that may impact Owners operation in adjoining spaces.

D. Perform noisy, malodorous, dusty, work:
   1. Between hours of 7:00 A.M. and 5:00 P.M.
   2. On following days: M - F.

E. Coordinate utility and building service interruptions with Owner.
   1. Do not disable or disrupt building fire or life safety systems without three days prior written notice to Owner.
   2. Schedule tie-ins to existing systems to minimize disruption.
   3. Coordinate Work to ensure fire sprinklers, fire alarms, smoke detectors, emergency lighting, exit signs and other life safety systems remain in full operation in occupied areas.

1.7 PROJECT CONDITIONS

A. Conduct demolition to minimize interference with adjacent occupied building areas.

B. Cease operations immediately if structure appears to be in danger and notify Architect/Owner. Do not resume operations until directed.

1.8 GENERAL DEMOLITION

A. Field verify all existing conditions and dimensions. If field conditions are not as shown on the plan, contact the project architect or engineer immediately prior to proceeding with any work.

B. Provide appropriate barricades, signage, and other safety precautions to protect visitors, tradesmen, and existing remaining conditions.

C. Completely remove all work and related work in areas designated on the plan.

D. Disconnect, remove, and cap all existing utilities as indicated and required to permit new work.

E. All work to be completed by appropriate, experienced trades (i.e. electrical demolition by electricians, etc.).

F. Restore existing areas which are damaged during construction. Match existing materials and finishes.

G. Do not use explosives or unsafe demolition methods.

H. Remove all debris from the site. Do not burn refuse on site. Material to be transposed to an approved site. Coordinate salvageable items with the Owner. Store salvageable items within designated areas.

I. The contractor shall provide proper shoring and bracing where needed.

J. All asbestos has to be removed in disturbed areas by a qualified contractor per State of Michigan regulations. All undisturbed areas shall remain and or be sealed off from access.

K. Any portions with lead paint will not be abraded, cut, or ignited to reduce potential harmful impact to workers.

PART 2 - PRODUCTS

2.1 Not Used.

PART 3 - EXECUTION

3.1 PREPARATION

A. Notify affected utility companies before starting work and comply with their requirements.

B. Mark location and termination of utilities.

C. Erect, and maintain temporary barriers and security devices, including warning signs and lights, and similar measures, for protection of the Owner, and existing improvements indicated to remain.

D. Erect and maintain weatherproof closures for exterior openings.

E. Erect and maintain temporary partitions to prevent spread of dust, odors, and noise to permit continued Owner occupancy.

F. Prevent movement of structure; provide temporary bracing and shoring required to ensure safety of existing structure.

G. Provide appropriate temporary signage including signage for exit or building egress.

H. Do not close or obstruct building egress path.

I. Do not disable or disrupt building fire or life safety systems without **3** days prior written notice to Owner.

3.2 SALVAGE REQUIREMENTS

A. Coordinate with Owner to identify building components and equipment required to be removed and delivered to Owner.

B. Tag components and equipment Owner designates for salvage.

C. Protect designated salvage items from demolition operations until items can be removed.

D. Carefully remove building components and equipment indicated to be salvaged.

E. Disassemble as required to permit removal from building.

F. Package small and loose parts to avoid loss.

G. Mark equipment and packaged parts to permit identification and consolidation of components of each salvaged item.

H. Prepare assembly instructions consistent with disassembled parts. Package assembly instructions in protective envelope and securely attach to each disassembled salvaged item.

I. Deliver salvaged items to Owner. Obtain signed receipt from Owner.

3.3 DEMOLITION

A. Only after lead-based paint abatement, shall Contractor begin demolition (if applicable).

B. Conduct demolition to minimize interference with adjacent and occupied building areas.

C. Maintain protected egress from and access to adjacent existing buildings at all times.

D. Do not close or obstruct roadways or sidewalks without permits.

E. Cease operations immediately when structure appears to be in danger and notify Architect/Owner.

F. Disconnect and remove designated utilities within demolition areas.

G. Cap and identify abandoned utilities at termination points when utility is not completely removed. Annotate Record Drawings indicating location and type of service for capped utilities remaining after demolition.

H. Demolish in orderly and careful manner. Protect existing improvements, supporting structural members.

I. Carefully remove building components indicated to be reused.
   1. Disassemble components as required to permit removal.
   2. Package small and loose parts to avoid loss.
   3. Mark components and packaged parts to permit reinstallation.
   4. Store components, protected from construction operations, until reinstalled.

J. Remove demolished materials from site except where specifically noted otherwise. Do not burn or bury materials on site.

K. Remove materials as Work progresses. Upon completion of Work, leave areas in clean condition.

L. Remove temporary Work.

END OF SECTION

SECTION 03 10 00

CONCRETE FORMING AND ACCESSORIES

PART 1 - GENERAL

1.1 SUMMARY

A. Section Includes:
   1. Formwork for cast-in-place concrete.
   2. Shoring, bracing, and anchorage.
   3. Form accessories.
   4. Form stripping.

B. Related Requirements:
   1. Section 03 20 00 - Concrete Reinforcing: Reinforcing steel and required supports for cast-in-place concrete.
   2. Section 03 30 00 - Cast-in-Place Concrete.

1.2 REFERENCE STANDARDS

A. American Concrete Institute:
   1. ACI 117 - Specification for Tolerances for Concrete Construction and Materials.
   2. ACI 301 - Specifications for Structural Concrete.
   3. ACI 318 - Building Code Requirements for Structural Concrete.
   4. ACI 347 - Guide to Formwork for Concrete.

B. American Forest & Paper Association:
   1. AF&PA - National Design Specification (NDS) for Wood Construction.

C. American Society of Mechanical Engineers:
   1. ASME A17.1 - Safety Code for Elevators and Escalators.

D. APA - The Engineered Wood Association:
   1. APA/EWA PS 1 - Voluntary Product Standard - Structural Plywood.

E. ASTM International:
   1. ASTM D1751 - Standard Specification for Preformed Expansion Joint Filler for Concrete Paving and Structural Construction (Nonextruding and Resilient Bituminous Types).
   2. ASTM E96 - Standard Test Methods for Water Vapor Transmission of Materials.

F. West Coast Lumber Inspection Bureau:
   1. WCLIB - Standard No. 17 Grading Rules for West Coast Lumber.

1.3 COORDINATION

A. Section 01 30 00 - Administrative Requirements: Requirements for coordination.

B. Coordinate Work of this Section with other Sections of Work in forming and placing openings, slots, reglets, recesses, sleeves, bolts, anchors, other inserts, and components of other Work.

1.4 SUBMITTALS

A. Section 01 33 00 - Submittal Procedures: Requirements for submittals.

B. Product Data: Submit manufacturer information on void form materials and installation requirements.

C. Shop Drawings:
   1. Indicate:
      a. Formwork, shoring, and reshoring.
      b. Pertinent dimensions, openings, methods of construction, types of connections, materials, joint arrangement and details, ties and shores, location of framing, studding and bracing, and temporary supports.
      c. Means of leakage prevention for concrete exposed to view in finished construction.
      d. Sequence and timing of erection and stripping, assumed compressive strength at time of stripping, height of lift, and height of drop during placement.
      e. Vertical, horizontal, and special loads according to ACI 347, and camber diagrams when applicable.
      f. Notes to formwork erector showing size and location of conduits and piping embedded in concrete according to ACI 318.
      g. Procedure and schedule for removal of shores and installation and removal of reshores.

D. Manufacturer's Certificate: Certify that products meet or exceed specified requirements.

E. Delegated Design Submittals:
   1. Submit signed and sealed Shop Drawings with design calculations and assumptions for formwork, shoring, and reshores.
   2. Indicate loads transferred to structure during process of concreting, shoring, and reshoring.
   3. Include structural calculations to support design.

F. Field Quality-Control Submittals: Indicate results of Contractor-furnished tests and inspections.

G. Qualifications Statement:
   1. Coordinate following Subparagraph with requirements specified in QUALIFICATIONS Article.
   2. Submit qualifications for licensed professional.

1.5 QUALITY ASSURANCE

A. Perform Work according to ACI 347, 301, and 318.

B. For wood products furnished for Work of this Section, comply with AF&PA.

C. Perform Work according to Municipal, State, and Federal standards.

1.6 QUALIFICATIONS

A. Licensed Professional: Professional engineer experienced in design of specified Work and licensed in State of Michigan.

1.7 DELIVERY, STORAGE, AND HANDLING

A. Section 01 60 00 - Product Requirements: Requirements for transporting, handling, storing, and protecting products.

B. Inspection: Accept void forms on Site in manufacturer's original packaging and inspect for damage.

C. Store materials off ground in a ventilated and protected manner to prevent deterioration from moisture.

PART 2 - PRODUCTS

2.1 PERFORMANCE AND DESIGN CRITERIA

A. Design, engineer, and construct formwork, shoring, and bracing according to ACI 318 to conform to design and applicable code requirements to achieve concrete shape, line, and dimension as indicated on Drawings.

2.2 WOOD FORM MATERIALS

A. Form Materials: At discretion of Contractor.

2.3 PREFABRICATED FORMS

A. Manufacturers:
   1. Sonoco Products Co.
   2. Substitutions: As specified in Section 01 60 00 - Product Requirements.

B. Preformed Steel Forms:
   1. Description: Matched, tightly fitted, and stiffened to support weight of concrete without deflection detrimental to tolerances and appearance of finished surfaces.

C. FRP Forms: Matched, tightly fitted, and stiffened to support weight of concrete without deflection detrimental to tolerances and appearance of finished concrete surfaces.

D. Pan:
   1. Material: Steel.
   2. Configuration: Size and profile as required.

E. Tubular Column:
   1. Description: Round spirally wound laminated fiber.
   2. Surface Treatment: Release agent, non-reusable.

3. Sizes: As indicated on Drawings.

F. Steel Forms:
1. Description: Sheet steel, suitably reinforced.
2. Design: For particular use as indicated on Drawings.

G. Form Liners: Smooth, durable, grainless, and non-staining hardboard unless otherwise indicated on Drawings.

H. Framing, Studding, and Bracing: Stud or No. 3 structural light-framing grade.

2.4 FORMWORK ACCESSORIES

A. Form Ties:
1. Type: Removable.
2. Material: Galvanized.
3. Length: Adjustable.
4. Furnish waterproofing washer.
5. Free of defects capable of leaving holes larger than 1 inch in concrete surface.

B. Spreaders:
1. Description: Standard, non-corrosive metal-form clamp assembly, of type acting as spreaders and leaving no metal within 1 inch of concrete face.
2. Wire ties, wood spreaders, or through bolts are not permitted.

C. Form Release Agent:
1. Description: Colorless mineral oil that will not stain concrete or absorb moisture [or impair natural bonding or color characteristics of coating intended for use on concrete].

D. Corners:
1. Type: Chamfer,.
2. Size: 3/4 by 3/4 inches.
3. Lengths: Maximum possible.

E. Dovetail Anchor Slot:
1. Material: Galvanized steel.
2. Thickness: 22 gage.
3. Filling: Foam.
4. Fasten slot to concrete formwork according to manufacturer instructions, and insert foam filler to prevent concrete from entering slot during pour.

F. Flashing Reglets:
1. Material: Galvanized steel.
2. Thickness: 22 gage.
3. Lengths: Maximum possible.
4. Furnish alignment splines for joints.
5. Filling: Foam.
6. Fasten flashing reglet to concrete formwork according to manufacturer instructions, and insert foam to prevent concrete from entering reglet during pour.

G. Vapor Retarder:
   1. Description: Polyethylene sheet.
   2. Thickness: 8 mils.

H. Bituminous Joint Filler: Comply with ASTM D1751.

I. Nails, Spikes, Lag Bolts, Through Bolts, Anchorages: Size, strength, and character to maintain formwork in place while placing concrete.

J. Waterstop:
   1. Description: Flexible strip of bentonite waterproofing compound in coil form for joints in concrete construction.

PART 3 - EXECUTION

3.1 EXAMINATION

A. Section 01 70 00 - Execution and Closeout Requirements: Requirements for installation examination.

B. Verify lines, levels, and centers before proceeding with formwork.

C. Verify that dimensions agree with Shop Drawings.

D. If formwork is placed after reinforcement resulting in insufficient concrete cover over reinforcement, request instructions from Engineer before proceeding.

3.2 INSTALLATION

A. Earth Forms: Not permitted.

B. Formwork:
   1. Provide top form for sloped surfaces steeper than 1.5 horizontal to 1 vertical to hold shape of concrete during placement, unless it can be demonstrated that top forms can be omitted.
   2. Construct forms to correct shape and dimensions, mortar-tight, braced, and of sufficient strength to maintain shape and position under imposed loads from construction operations.
   3. Camber forms where necessary to produce level finished soffits unless indicated otherwise on Drawings.
   4. Positioning:
      a. Carefully verify horizontal and vertical positions of forms.
      b. Correct misaligned or misplaced forms before placing concrete.
   5. Complete wedging and bracing before placing concrete.
   6. Erect formwork, shoring, and bracing to achieve design requirements according to ACI 318.
   7. Stripping:
      a. Arrange and assemble formwork to permit dismantling and stripping.
      b. Do not damage concrete during stripping.
      c. Permit removal of remaining principal shores.

8. Obtain approval of Engineer before framing openings in structural members not indicated on Drawings.
9. Install fillet and chamfer strips on external corners of beams, joists, and columns.
10. Install void forms according to manufacturer instructions.
11. Do not reuse wood formwork more than 2 times for concrete surfaces to be exposed to view.
12. Do not patch formwork.
13. Leave forms in place for minimum number of days according to ACI 347.

C. Form Removal:
1. Do not remove forms or bracing until concrete has gained sufficient strength to carry its own weight and imposed loads, and removal has been approved by Engineer.
2. Loosen forms carefully; do not wedge pry bars, hammers, or tools against finish concrete surfaces scheduled for exposure to view.
3. Store removed forms in manner that surfaces to be in contact with fresh concrete will not be damaged.
4. Discard damaged forms.
5. Form Release Agent:
    a. Apply according to manufacturer instructions.
    b. Apply prior to placement of reinforcing steel, anchoring devices, and embedded items.
    c. Do not apply form release agent if concrete surfaces are indicated to receive special finishes or applied coverings that may be affected by agent.
    d. Soak inside surfaces of untreated forms with clean water, and keep surfaces coated prior to placement of concrete.
6. Form Cleaning:
    a. Clean forms as erection proceeds to remove foreign matter within forms.
    b. Clean formed cavities of debris prior to placing concrete.
    c. Flush with water or use compressed air to remove remaining foreign matter.
    d. Ensure that water and debris drain to exterior through cleanout ports.
    e. Cold Weather:
        1) During cold weather, remove ice and snow from within forms.
        2) Do not use de-icing salts.
        3) Do not use water to clean out forms, unless formwork and concrete construction proceed within heated enclosure; use compressed air or other dry method to remove foreign matter.
7. Reuse and Coating of Forms:
    a. Thoroughly clean forms and reapply form coating before each reuse.
    b. For exposed Work, do not reuse forms with damaged faces or edges.
    c. Apply form coating to forms according to manufacturer instructions.
    d. Do not coat forms for concrete indicated to receive "scored finish."
    e. Apply form coatings before placing reinforcing steel.

D. Forms for Smooth Finish Concrete:
1. Use steel, plywood, or lined-board forms.
2. Use clean and smooth plywood and form liners, uniform in size, and free from surface and edge damage capable of affecting resulting concrete finish.
3. Install form lining with close-fitting square joints between separate sheets without springing into place.
4. Use full-sized sheets of form liners and plywood wherever possible.
5. Tape joints to prevent protrusions in concrete.

6. Apply forming and strip wood forms in a manner to protect corners and edges.
7. Level and continue horizontal joints.
8. Keep wood forms wet until stripped.

E. Architectural Form Liners:
1. Erect architectural side of formwork first.
2. Attach form liner to forms before installing form ties.
3. Install form liners square, with joints and pattern aligned.
4. Seal form liner joints to prevent grout leaks.
5. Dress joints and edges to match form liner pattern and texture.

F. Forms for Surfaces to Receive Membrane Waterproofing:
1. Use plywood or steel forms.
2. After erection of forms, tape form joints to prevent protrusions in concrete.

G. Framing, Studding, and Bracing:
1. Maximum Spacing of Studs:
   a. Boards: Maximum 16 inches o.c.
   b. Plywood: 12 inches o.c.
2. Size framing, bracing, centering, and supporting members for sufficient strength to maintain shape and position under imposed loads from construction operations.
3. Construct beam soffits of material minimum 2 inches thick.
4. Distribute bracing loads over base area on which bracing is erected.
5. When placed on ground, protect against undermining, settlement, and accidental impact.

H. Form Anchors and Hangers:
1. Do not use anchors and hangers leaving exposed metal at concrete surface.
2. Symmetrically arrange hangers supporting forms from structural-steel members to minimize twisting or rotation of member.
3. Penetration of structural-steel members is not permitted.

I. Inserts, Embedded Parts, and Openings:
1. Install formed openings for items to be embedded in or passing through concrete Work.
2. Locate and set in place items required to be cast directly into concrete.
3. Install accessories straight, level, and plumb, and ensure that items are not disturbed during concrete placement.
4. Joints:
   a. Install water-stops continuous without displacing reinforcement.
5. Openings:
   a. Provide temporary ports or openings in formwork as required to facilitate cleaning and inspection.
   b. Locate openings at bottom of forms to allow flushing water to drain.
6. Close temporary openings with tight-fitting panels, flush with inside face of forms, and neatly fitted such that joints will not be apparent in exposed concrete surfaces.

J. Form Ties:
1. Provide sufficient strength and quantity to prevent spreading of forms.
2. Place ties at least 1 inch away from finished surface of concrete.
3. Leave inner rods in concrete when forms are stripped.

4. Space form ties equidistant, symmetrical, and aligned vertically and horizontally unless indicated otherwise on Drawings.

K. Arrange formwork to allow proper erection sequence and to permit form removal without damage to concrete.

L. Construction Joints:
   1. Install surfaced pouring strip where construction joints intersect on exposed surfaces to provide straight line at joints.
   2. Just prior to subsequent concrete placement, remove strip and tighten forms to conceal shrinkage.
   3. Appearance:
      a. Show no overlapping of construction joints.
      b. Construct joints to present same appearance as butted plywood joints.
   4. Arrange joints in continuous line straight, true, and sharp.

M. Embedded Items:
   1. Make provisions for pipes, sleeves, anchors, inserts, reglets, anchor slots, nailers, waterstops, and other features.
   2. Do not embed wood or uncoated aluminum in concrete.
   3. Obtain installation and setting information for embedded items furnished under other Sections.
   4. Securely anchor embedded items in correct location and alignment prior to placing concrete.
   5. Ensure that conduits and pipes, including those made of coated aluminum, meet requirements of ACI 318 regarding size and location limitations.

N. Openings for Items Passing through Concrete:
   1. Frame openings in concrete where indicated on Drawings.
   2. Establish exact locations, sizes, and other conditions required for openings and attachment of Work specified under other Sections.
   3. Coordinate Work to avoid cutting and patching of concrete after placement.
   4. Perform cutting and repairing of concrete required as result of failure to provide required openings.

O. Screeds:
   1. Set screeds and establish levels for tops of and finish on concrete slabs.
   2. Slope slabs to drain where required or as indicated on Drawings.
   3. Before depositing concrete, remove debris from space to be occupied by concrete and thoroughly wet forms; remove freestanding water.

P. Screed Supports:
   1. For concrete over waterproof membranes and vapor retarder membranes, use cradle-, pad-, or base-type screed supports that will not puncture membrane.
   2. Staking through membrane is not permitted.

Q. Cleanouts and Access Panels:
   1. Provide removable cleanout sections or access panels at bottoms of forms to permit inspection and effective cleaning of loose dirt, debris, and waste material.
   2. Clean forms and surfaces against which concrete is to be placed.

3. Remove chips, sawdust, and other debris.
4. Thoroughly blow out forms with compressed air just before concrete is placed.

3.3 TOLERANCES

A. Tolerances: Construct formwork to produce completed concrete surfaces within construction tolerances according to ACI 117.

3.4 FIELD QUALITY CONTROL

A. Section 01 40 00 - Quality Requirements: Requirements for inspecting and testing.

B. Inspection:
1. Inspect erected formwork, shoring, and bracing to ensure that Work complies with formwork design and that supports, fastenings, wedges, ties, and items are secure.
2. Notify Engineer after placement of reinforcing steel in forms but prior to placing concrete.
3. Schedule concrete placement to permit formwork inspection before placing concrete.

END OF SECTION

SECTION 03 20 00

CONCRETE REINFORCING

PART 1 - GENERAL

1.1 SUMMARY

A. Section Includes:
   1. Reinforcing bars.
   2. Welded wire fabric.
   3. Reinforcement accessories.

B. Related Requirements:
   1. Section 03 10 00 - Concrete Forming and Accessories.
   2. Section 03 30 00 - Cast-in-Place Concrete.

1.2 REFERENCE STANDARDS

A. American Concrete Institute:
   1. ACI 301 - Specifications for Structural Concrete.
   2. ACI 318 - Building Code Requirements for Structural Concrete.
   3. ACI 530/530.1 - Building Code Requirements and Specification for Masonry Structures.
   4. ACI SP-66 - ACI Detailing Manual.

B. American Welding Society:

   1. AWS D1.4 - Structural Welding Code - Reinforcing Steel.

C. ASTM International:
   1. ASTM A184 - Standard Specification for Welded Deformed Steel Bar Mats for Concrete Reinforcement.
   2. ASTM A615 - Standard Specification for Deformed and Plain Carbon-Steel Bars for Concrete Reinforcement.
   3. ASTM A704 - Standard Specification for Welded Steel Plain Bar or Rod Mats for Concrete Reinforcement.
   4. ASTM A706 - Standard Specification for Deformed and Plain Low-Alloy Steel Bars for Concrete Reinforcement.
   5. ASTM A767 - Standard Specification for Zinc-Coated (Galvanized) Steel Bars for Concrete Reinforcement.
   6. ASTM A775 - Standard Specification for Epoxy-Coated Steel Reinforcing Bars.
   7. ASTM A884 - Standard Specification for Epoxy-Coated Steel Wire and Welded Wire Reinforcement.
   8. ASTM A934 - Standard Specification for Epoxy-Coated Prefabricated Steel Reinforcing Bars.
   9. ASTM A996 - Standard Specification for Rail-Steel and Axle-Steel Deformed Bars for Concrete Reinforcement.

10. ASTM A1064 - Standard Specification for Carbon-Steel Wire and Welded Wire Reinforcement, Plain and Deformed, for Concrete.

D. Concrete Reinforcing Steel Institute:
   1. CRSI 10-MSP - Manual of Standard Practice.
   2. CRSI 10PLACE - Placing Reinforcing Bars.

1.3 COORDINATION

A. Section 01 30 00 - Administrative Requirements: Requirements for coordination.

B. Coordinate Work of this Section with placement of formwork, formed openings, and other Work.

1.4 SUBMITTALS

A. Section 01 33 00 - Submittal Procedures: Requirements for submittals.

B. Shop Drawings:
   1. Indicate bar sizes, spacings, locations, splice locations, and quantities of reinforcing steel.
   2. Indicate bending and cutting schedules.
   3. Indicate supporting and spacing devices.

C. Manufacturer's Certificate: Certify that products meet or exceed specified requirements.

D. Submit certified copies of mill test report of reinforcement materials analysis.

E. Welder Certificates: Certify welders and welding procedures employed on Work, verifying AWS qualification within previous 12 months.

F. Source Quality-Control Submittals: Indicate results of factory tests and inspections.

G. Field Quality-Control Submittals: Indicate results of Contractor-furnished tests and inspections.

H. Qualifications Statement:
   1. Welders: Qualify procedures and personnel according to AWS D1.1.

1.5 QUALITY ASSURANCE

A. Perform Work according to ACI 301 ACI 318.

B. Prepare Shop Drawings according to ACI SP-66.

C. Perform Work according to Municipal, State, and Federal standards.

1.6 QUALIFICATIONS

A. Welders: AWS qualified within previous 12 months for employed weld types.

1.7 DELIVERY, STORAGE, AND HANDLING

A. Section 01 60 00 - Product Requirements: Requirements for transporting, handling, storing, and protecting products.

B. Inspection: Accept materials on Site in manufacturer's original packaging and inspect for damage.

C. Store materials according to manufacturer instructions.

D. Protection:
   1. Protect materials from moisture by storing in clean, dry location remote from construction operations areas.
   2. Provide additional protection according to manufacturer instructions.

1.8 EXISTING CONDITIONS

A. Field Measurements:
   1. Verify field measurements prior to fabrication.
   2. Indicate field measurements on Shop Drawings.

PART 2 - PRODUCTS

2.1 REINFORCEMENT

A. Reinforcing Steel:
   1. Comply with ASTM A615.
   2. Yield Strength: 60 ksi.
   3. Billet Bars: Deformed.
   4. Finish: Uncoated.

2.2 FABRICATION

A. Fabricate concrete reinforcement according to ACI 318.

B. Form standard hooks for, 90-degree bends, stirrups and tie hooks as indicated on Drawings.

C. Form reinforcement bends with minimum diameters according to ACI 318.

D. Fabricate column reinforcement with offset bends at reinforcement splices.

E. Form ties and stirrups from following:
   1. Bars No. 10 and Smaller: No. 3 deformed bars.
   2. Bars No. 11 and Larger: No. 4 deformed bars.

F. Splicing:
   1. If not indicated on Drawings, locate reinforcement splices at point of minimum stress.
   2. Obtain approval of splice locations from Engineer.

2.3 ACCESSORY MATERIALS

A. Tie Wire:
   1. Minimum 16 gage, annealed type.

B. Chairs, Bolsters, Bar Supports, and Spacers:

C. Size and Shape: To strengthen and support reinforcement during concrete placement conditions.

D. Epoxy Coating Patching Material: Type as recommended by coating manufacturer.

2.4 SOURCE QUALITY CONTROL

A. Provide shop inspection and testing of completed assembly.

B. Section 01 40 00 - Quality Requirements: Requirements for testing, inspection, and analysis.

C. Certificate of Compliance:
   1. If fabricator is approved by authorities having jurisdiction, submit certificate of compliance indicating Work performed at fabricator's facility conforms to Contract Documents.
   2. Specified shop tests are not required for Work performed by approved fabricator.

PART 3 - EXECUTION

3.1 INSTALLATION

A. Place, support, and secure reinforcement against displacement.

B. Do not deviate from required position beyond specified tolerance.

C. Do not weld crossing reinforcement bars for assembly except as permitted by Engineer.

D. Do not displace or damage vapor retarder.

E. Accommodate placement of formed openings.

F. Spacing:
   1. Space reinforcement bars with minimum clear spacing according to ACI 318.
   2. If bars are indicated in multiple layers, place upper bars directly above lower bars.

G. Maintain minimum concrete cover around reinforcement according to ACI 318 or as shown on the plans.

3.2 TOLERANCES

A. Section 01 40 00 - Quality Requirements: Requirements for tolerances.

B. Install reinforcement within following tolerances for flexural members, walls, and compression members:

1. Reinforcement Depth Greater Than 8 Inches:
    a. Depth Tolerance: Plus or Minus 3/8 inch
    b. Minus 3/8 inch
2. Reinforcement Depth Less Than or Equal to 8 Inches:
    a. Depth Tolerance: Plus or Minus 1/2 inch
    b. Minus 1/2 inch

3.3 FIELD QUALITY CONTROL

A. Section 01 70 00 - Execution and Closeout Requirements: Requirements for testing, adjusting, and balancing.

B. Perform field inspection and testing according to ACI 318.

C. Provide unrestricted access to Work and cooperate with appointed inspection and testing firm.

D. Reinforcement Inspection:
1. Placement Acceptance: Inspect specified and ACI 318 material requirements and specified placement tolerances.
2. Welding: Inspect welds according to AWS D1.1.
3. Periodic Placement Inspection: Inspect for correct materials, fabrication, sizes, locations, spacing, concrete cover, and splicing.
4. Weldability Inspection: Inspect for reinforcement weldability if formed from steel other than ASTM A706.
5. Continuous Weld Inspection: Inspect reinforcement according to ACI 318.
6. Periodic Weld Inspection: Inspect other welded connections.

END OF SECTION

SECTION 03 30 00

CAST-IN-PLACE CONCRETE

PART 1 - GENERAL

1.1 SUMMARY

A. Section Includes Cast-in-Place Concrete for Following Items:

1. Foundation walls.
2. Footings.
3. Supported slabs.
4. Slabs on grade.

B. Related Requirements:

1. Section 03 10 00 - Concrete Forming and Accessories.
2. Section 03 20 00 - Concrete Reinforcing.
3. Section 03 39 00 - Concrete Curing.
4. Section 31 23 23 - Fill.

1.2 REFERENCE STANDARDS

A. American Concrete Institute:

1. ACI 301 - Specifications for Structural Concrete.
2. ACI 305R - Guide to Hot Weather Concreting.
3. ACI 306.1 - Standard Specification for Cold Weather Concreting.
4. ACI 308.1 - Specification for Curing Concrete.
5. ACI 318 - Building Code Requirements for Structural Concrete.

B. ASTM International:

1. ASTM B221 - Standard Specification for Aluminum and Aluminum-Alloy Extruded Bars, Rods, Wire, Profiles, and Tubes.
2. ASTM C31 - Standard Practice for Making and Curing Concrete Test Specimens in the Field.
3. ASTM C33 - Standard Specification for Concrete Aggregates.
4. ASTM C39 - Standard Test Method for Compressive Strength of Cylindrical Concrete Specimens.
5. ASTM C42 - Standard Test Method for Obtaining and Testing Drilled Cores and Sawed Beams of Concrete.
6. ASTM C94 - Standard Specification for Ready-Mixed Concrete.
7. ASTM C143 - Standard Test Method for Slump of Hydraulic-Cement Concrete.
8. ASTM C150 - Standard Specification for Portland Cement.
9. ASTM C172 - Standard Practice for Sampling Freshly Mixed Concrete.

10. ASTM C173 - Standard Test Method for Air Content of Freshly Mixed Concrete by the Volumetric Method.
11. ASTM C231 - Standard Test Method for Air Content of Freshly Mixed Concrete by the Pressure Method.
12. ASTM C260 - Standard Specification for Air-Entraining Admixtures for Concrete.
13. ASTM C330 - Standard Specification for Lightweight Aggregates for Structural Concrete.
14. ASTM C494 - Standard Specification for Chemical Admixtures for Concrete.
15. ASTM C595 - Standard Specification for Blended Hydraulic Cements.
16. ASTM C618 - Standard Specification for Coal Fly Ash and Raw or Calcined Natural Pozzolan for Use in Concrete.
17. ASTM C685 - Standard Specification for Concrete Made by Volumetric Batching and Continuous Mixing.
18. ASTM C845 - Standard Specification for Expansive Hydraulic Cement.
19. ASTM C989 - Standard Specification for Slag Cement for Use in Concrete and Mortars.
20. ASTM C1017 - Standard Specification for Chemical Admixtures for Use in Producing Flowing Concrete.
21. ASTM C1064 - Standard Test Method for Temperature of Freshly Mixed Hydraulic-Cement Concrete.
22. ASTM C1107 - Standard Specification for Packaged Dry, Hydraulic-Cement Grout (Nonshrink).
23. ASTM C1116 - Standard Specification for Fiber-Reinforced Concrete.
24. ASTM C1157 - Standard Performance Specification for Hydraulic Cement.
25. ASTM C1218 - Standard Test Method for Water-Soluble Chloride in Mortar and Concrete.
26. ASTM C1240 - Standard Specification for Silica Fume Used in Cementitious Mixtures.
27. ASTM D994 - Standard Specification for Preformed Expansion Joint Filler for Concrete (Bituminous Type).
28. ASTM D1751 - Standard Specification for Preformed Expansion Joint Filler for Concrete Paving and Structural Construction (Nonextruding and Resilient Bituminous Types).
29. ASTM D1752 - Standard Specification for Preformed Sponge Rubber Cork and Recycled PVC Expansion Joint Fillers for Concrete Paving and Structural Construction.
30. ASTM D6690 - Standard Specification for Joint and Crack Sealants, Hot Applied, for Concrete and Asphalt Pavements.
31. ASTM E96 - Standard Test Methods for Water Vapor Transmission of Materials.
32. ASTM E119 - Standard Test Methods for Fire Tests of Building Construction and Materials.
33. ASTM E1643 - Standard Practice for Selection, Design, Installation, and Inspection of Water Vapor Retarders Used in Contact with Earth or Granular Fill Under Concrete Slabs.
34. ASTM E1745 - Standard Specification for Plastic Water Vapor Retarders Used in Contact with Soil or Granular Fill under Concrete Slabs.

1.3 COORDINATION

A. Section 01 30 00 - Administrative Requirements: Requirements for coordination.

B. Coordinate placement of joint devices with erection of concrete formwork and placement of form accessories.

1.4 SUBMITTALS

A. Section 01 33 00 - Submittal Procedures: Requirements for submittals.

B. Product Data: Submit data on joint devices, attachment accessories, admixtures, and mix design.

C. Design Data:

1. Submit concrete mix design for each concrete strength.
2. Submit separate mix designs if admixtures are required for following:
   a. Hot and cold weather concrete Work.
   b. Air entrained concrete Work.
3. Identify mix ingredients and proportions, including admixtures.
4. Identify chloride content of admixtures and whether or not chlorides were added during manufacture.

D. Manufacturer's Certificate: Certify that products meet or exceed specified requirements.

E. Manufacturer Instructions: Submit installation procedures and interfacing required with adjacent Work.

F. Field Quality-Control Submittals: Indicate results of Contractor-furnished tests and inspections.

1.5 CLOSEOUT SUBMITTALS

A. Section 01 70 00 - Execution and Closeout Requirements: Requirements for submittals.

B. Project Record Documents: Record actual locations of embedded utilities and components concealed from view in finished construction.

1.6 QUALITY ASSURANCE

A. Perform Work according to ACI 301.

B. Comply with ACI 305R when pouring concrete during hot weather.

C. Comply with ACI 306.1 when pouring concrete during cold weather.

D. Acquire cement and aggregate from one source for Work.

E. Perform Work according to Municipal, State, and Federal standards.

1.7 AMBIENT CONDITIONS

A. Section 01 50 00 - Temporary Facilities and Controls: Requirements for ambient condition control facilities for product storage and installation.

B. Maintain concrete temperature after installation at minimum 50 degrees F for minimum seven days.

PART 2 - PRODUCTS

2.1 PERFORMANCE AND DESIGN CRITERIA

A. Vapor Retarder Permeance: Maximum 1 perm when tested according to ASTM E96, water method.

2.2 MATERIALS

A. Concrete:

1. Cement:
   a. Comply with ASTM C150, Type IIA - Air Entraining.
   b. Type: Portland.
2. Normal Weight Aggregates:
   a. Comply with ASTM C33.
   b. Coarse Aggregate Maximum Size: According to ACI 301.
3. Water:
   a. Comply with ACI 318.
   b. Potable, without deleterious amounts of chloride ions.

B. Admixtures:

1. Air Entrainment: Comply with ASTM C260.
2. Chemical:
   a. Comply with ASTM C494.
   b. Type A - Water Reducing.
   c. Type B - Retarding.
   d. Type C - Accelerating.
   e. Type D - Water Reducing and Retarding.
   f. Type E - Water Reducing and Accelerating.
   g. Type F - Water Reducing, High Range.
   h. Type G - Water Reducing, High Range, and Retarding.
3. Fly Ash: Comply with ASTM C618, Class F or C.
4. Silica Fume: Comply with ASTM C1240.
5. Slag:
   a. Description: Ground-granulated blast-furnace slag.
   b. Comply with ASTM C989.
   c. Grade 100 or 120.
6. Plasticizing:
   a. Comply with ASTM C1017.
   b. Type II, plasticizing and retarding.

2.3 CONCRETE MIX

A. Select proportions for normal weight concrete according to ACI 301, Method 1.

B. Concrete mixtures, general:

1. Prepare design mixtures for each type and strength of concrete, proportioned on the basis of laboratory trial mixture or field test data, or both.
2. Cementitious Materials: Limit percentage, by weight, of cementitious materials other than Portland cement in concrete as follows:
    a. Fly Ash: 25%
    b. Ground Granulated Blast-Furnace Slag: 50%
    c. Combined Fly Ash and Ground Granulated Blast-Furnace Slag: 50%
    d. Portland cement minimum, with fly ash not exceeding 25%
3. Limit water-soluble, chloride-ion content in hardened concrete to 0.15% by weight of cement.
4. Admixtures: Use admixtures according to manufacturer's written instructions.
    a. Use water-reducing, high-range water-reducing or plasticizing admixture in concrete, as required, for placement and workability.
    b. Use water-reducing and retarding admixture when required by high temperatures, low humidity, or other adverse placement conditions.
    c. Use water-reducing admixture in pumped concrete, concrete for heavy-use industrial slabs and parking structure slabs, concrete required to be watertight, and concrete with a water-cementitious materials ratio below 0.50.
    d. Use air-entraining admixture in exterior exposed concrete unless otherwise indicated. Add air-entraining admixture at manufacturer's prescribed rate to result in concrete at point of placement having a total air content with a tolerance of plus or minus 1-1/2 percent within the following limits:
        1) Concrete structures and slabs exposed to freezing and thawing, deicer chemicals, or hydraulic pressure: 5.0 percent.
        2) Other concrete not exposed to freezing, thawing, or hydraulic pressure, or to receive a surface hardener: 2 to 4 percent.

C. Concrete mixtures for building elements:

1. Class A – Structural Concrete:
    a. Minimum Compressive Strength: 3000 psi at 7 days.
    b. Minimum Compressive Strength: 4000 psi at 28 days.
    c. Slump Limit: 4-1 inches.
2. Class B – Mud Mat Concrete or Slab On Fill Concrete:
    a. Minimum Compressive Strength: 3000 psi at 7 days.
    b. Minimum Compressive Strength: 4000 psi at 28 days.
    c. Slump Limit: 4-1 inches.
3. Class C – Fill or Superstructure Concrete
    a. Minimum Compressive Strength: 3000 psi at 7 days.
    b. Minimum Compressive Strength: 4000 psi at 28 days.
    c. Slump: 4-1 inches.

D. Admixtures:

1. Include admixture types and quantities indicated in concrete mix designs only if approved by Engineer.
2. Cold Weather:
    a. Use accelerating admixtures in cold weather.
    b. Use of admixtures will not relax cold-weather placement requirements.

3. Hot Weather: Use set-retarding admixtures.
4. Use calcium chloride only if approved by Engineer.
5. Add air entrainment admixture to concrete mix for Work exposed to freezing and thawing or deicing chemicals.
6. For concrete exposed to deicing chemicals, limit fly ash, pozzolans, silica fumes, and slag content as required.

E. Average Compressive Strength Reduction: Not permitted.

F. Ready-Mixed Concrete: Mix and deliver concrete according to ASTM C685.

G. Site-Mixed Concrete: Mix concrete according to ACI 318.

2.4 ACCESSORIES

A. Bonding Agent:

1. Description: Two-component modified epoxy resin.

B. Non-shrink Grout:

1. Description: Premixed compound consisting of non-metallic aggregate, cement, and water-reducing and plasticizing agents.
2. Comply with ASTM C1107.
3. Minimum Compressive Strength: 2,400 psi.

C. Bentonite Waterstops: Continuous 1 inch x ¾ inch strips, containing 75% bentonite by weight. Proper care and construction procedures shall be used to avoid damaging or displacing the strip while placing concrete. If the material exhibits considerable swelling prior to confinement in the joint, it must be replaced as directed by the Engineer. Joint shall be cleaned from debris and dry prior to replacement. Install per manufacturer's instructions as approved by the Engineer.

D. Wall Sleeves: HDPE thermoplastic sleeves, "CS" model, used for non-concrete pipe penetrations requiring "Link-seals".

E. Expansion Joints: ANSI/ASTM D1751, fiber type; 1/4 inch to 1 inch thick.

F. Form Release Agent: Colorless material which will not stain concrete, absorb moisture or impair natural bonding or color characteristics of coating intended for use on concrete.

G. Corners: Chamfered, wood strip type 3/4" x 3/4" size.

H. Vapor Retarder: Clear polyethylene film, 6 mils thick, with joint tape. Joint tape as recommended by manufacturer.

PART 3 - EXECUTION

3.1 EXAMINATION

A. Section 01 70 00 - Execution and Closeout Requirements: Requirements for installation examination.

B. Verify requirements for concrete cover over reinforcement.

C. Verify that anchors, seats, plates, reinforcement, and other items to be cast into concrete are accurately placed, positioned securely, and will not interfere with placing concrete.

3.2 PREPARATION

A. Section 01 70 00 - Execution and Closeout Requirements: Requirements for installation preparation.

B. Previously Placed Concrete:

1. Prepare previously placed concrete by cleaning with steel brush and applying bonding agent.
2. Remove laitance, coatings, and unsound materials.

C. In locations where new concrete is doweled to existing work, drill holes in existing concrete, insert steel dowels, and pack solid with non-shrink grout.

D. Remove debris and ice from formwork, reinforcement, and concrete substrates.

E. Remove water from areas receiving concrete before concrete is placed.

3.3 INSTALLATION

A. Placing Concrete:

1. Place concrete according to ACI 301.
2. Notify testing laboratory and Engineer minimum 48 hours prior to commencement of operations.
3. Ensure that reinforcement, inserts, embedded parts, formed expansion and contraction joints, and existing utilities are not disturbed during concrete placement.
4. Install vapor retarder under interior slabs on grade according to ASTM E1643.
5. Lap joints minimum 6 inches and seal watertight by taping edges and ends.
6. Repairs:
    a. Repair vapor retarder damaged during placement of concrete reinforcement.
    b. Using vapor retarder material, lap over damaged areas minimum 6 inches and seal watertight.
7. Joint Filler:
    a. Separate slabs on grade from vertical surfaces with joint filler.
    b. Place joint filler in floor slab pattern placement sequence; set top to required elevations; secure to resist movement by wet concrete.
    c. Extend joint filler from bottom of slab to within 1/2 inch of finished slab surface.

8. Joint Devices:
    a. Coordination: Install construction joint devices in coordination with floor slab pattern placement sequence; set top to required elevations; secure to resist movement by wet concrete.
    b. Install joint device anchors, maintaining correct position to allow joint cover to be flush with floor and wall finish.
    c. Install joint covers in longest practical length when adjacent construction activity is complete.
9. Deposit concrete at final position, preventing segregation of mix.
10. Place concrete in continuous operation for each panel or section as determined by predetermined joints.
11. Consolidate concrete.
12. Maintain records of concrete placement, including date, location, quantity, air temperature, and test samples taken.
13. Place concrete continuously between predetermined expansion, control, and construction joints.
14. Do not interrupt successive placement and do not permit cold joints to occur.
15. Place floor slabs in indicated checkerboard or saw-cut pattern.
16. Saw-Cut Joints:
    a. Saw-cut joints within 12 hours after placing.
    b. Use 3/16 inch thick blade.
    c. Cut into 1/4 depth of slab thickness.
17. Screeding:
    a. Screed floors and slabs on grade level.
    b. Surface Flatness: maximum 1/4 inch in 10 feet.

B. Separate Floor Toppings:

1. Prior to placing floor topping, remove deleterious material, roughen substrate concrete surface, and broom and vacuum clean.
2. Place required dividers and reinforcement and other items to be cast in concrete.
3. Apply bonding agent to substrate.

C. Concrete Finishing:

1. Provide formed concrete surfaces to be left exposed with smooth finish.

D. Curing and Protection:

1. Immediately after placement, protect concrete from premature drying, excessively hot or cold temperatures, and mechanical injury.
2. Protect concrete footings from freezing for minimum of five days.
3. Maintain concrete with minimal moisture loss at relatively constant temperature for period as necessary for hydration of cement and hardening of concrete.

3.4 FIELD QUALITY CONTROL

A. Section 01 40 00 - Quality Requirements: Requirements for inspecting and testing.

B. Inspection and Testing: Performed by Owner's testing laboratory according to ACI 318.

C. Provide unrestricted access to Work and cooperate with appointed testing and inspection firm.

D. Submit proposed mix design of each class of concrete to inspection and testing firm for review prior to commencement of Work.

E. Concrete Inspections:

1. Continuous Placement Inspection: Inspect for proper installation procedures.
2. Periodic Curing Inspection: Inspect for specified curing temperature and procedures.

F. Strength Test Samples:

1. Sampling Procedures: Comply with ASTM C172.
2. Cylinder Molding and Curing Procedures:
   a. Comply with ASTM C31.
   b. Cylinder Specimens: Field cured.
3. Sample concrete and make one set of three cylinders for every 75 cu. yd. or less of each class of concrete placed each day, and for every 5,000 sq. ft. of surface area for slabs and walls.
4. If volume of concrete for a class of concrete would provide less than five sets of cylinders, take samples from five randomly selected batches, or from every batch if less than five batches are used.
5. Make one additional cylinder during cold weather concreting and field cure.

G. Field Testing:

1. Slump Test Method: Comply with ASTM C143.
2. Air Content Test Method: Comply with ASTM C173.
3. Temperature Test Method: Comply with ASTM C1064.
4. Compressive Strength Concrete:
   a. Measure slump and temperature for each sample.
   b. Measure air content in air-entrained concrete for each sample.

H. Cylinder Compressive Strength Testing:

1. Test Method: Comply with ASTM C39.
2. Test Acceptance: According to ACI 318.
3. Test one cylinder at seven days.
4. Test one cylinder at 28 days.
5. Retain one cylinder for 30 days for testing when requested by Engineer.
6. Dispose of remaining cylinders if testing is not required.

I. Core Compressive Strength Testing:

1. Sampling and Testing Procedures: Comply with ASTM C42.
2. Test Acceptance: According to ACI 318.
3. Drill three cores for each failed strength test from failed concrete.

J. Patching:

1. Allow Engineer to inspect concrete surfaces immediately upon removal of forms.
2. Honeycombing or Embedded Debris in Concrete:
   a. Not acceptable.
   b. Notify Engineer upon discovery.
3. Patch imperfections according to ACI 301.

K. Defective Concrete:

1. Description: Concrete not conforming to required lines, details, dimensions, tolerances, or specified requirements.
2. Repair or replacement of defective concrete will be determined by Engineer.
3. Do not patch, fill, touch up, repair, or replace exposed concrete except upon express direction of Engineer for each individual area.

END OF SECTION

SECTION 03 39 00

CONCRETE CURING

1. PART 1 GENERAL

1.1 SECTION INCLUDES

A. Initial and final curing of horizontal concrete surfaces.

1.2 RELATED SECTIONS

A. Section 033000 - Cast-In-Place Concrete.

1.3 REFERENCES

A. ACI 301 – Structural Concrete for Buildings.

B. ACI 302 - Recommended Practice for Concrete Floor and Slab Construction.

C. ACI 308 - Standard Practice for Curing Concrete.

D. ASTM C171 - Sheet Materials for Curing Concrete.

E. ASTM C309 - Liquid Membrane-Forming Compounds for Curing Concrete.

1.4 SUBMITTALS

A. Submit under provisions of Section 013300.

B. Product Data: Provide data on curing compounds, product characteristics, compatibility and limitations.

C. Manufacturer's Installation Instructions: Indicate criteria for preparation and application.

1.5 QUALITY ASSURANCE

A. Perform Work in accordance with ACI 301 and 308.

B. Maintain one copy of document on site.

1.6 DELIVERY, STORAGE, AND HANDLING

A. Deliver, store, protect and handle products under provisions of Section 016000.

B. Deliver curing materials in manufacturer's packaging including application instructions.

2. PART 2 PRODUCTS

2.1 MATERIALS

A. Liquid Membrane Forming Curing Compound ASTM C309 Type 1 Class B, liquid acrylate type, clear, without fugitive dye; curing compounds shall not contain ingredients which might stain through, injure the concrete or prevent a good bond for subsequent coatings or finishes; manufactured by Sonneborn Building Products or equal.

B. Absorptive Mats ASTM C171, cotton fabric or burlap-polyethylene, minimum 8 oz/sq yd. bonded to prevent separation during handling and placing.

C. Water: Potable and not detrimental to concrete.

3. PART 3 EXECUTION

3.1 EXAMINATION

A. Section 017000 – Execution and closeout requirements for application examination.

B. Verify that substrate surfaces are ready to be cured.

3.2 EXECUTION - HORIZONTAL SURFACES

A. Cure slabs in accordance with ACI 308.

B. Spraying: Spray water over floor slab areas and maintain wet for 7 days.

C. Membrane Curing Compound: Apply curing compound in accordance with manufacturer's instructions.

3.3 EXECUTION - VERTICAL SURFACES

A. Cure surfaces in accordance with ACI 308.

B. Spraying: Spray water over surfaces and maintain wet for 7 days.

C. Membrane Curing Compound: Apply curing compound in accordance with manufacturer's instructions.

3.4 PROTECTION OF FINISHED WORK

A. Protect finished Work under provisions of Section 015000.

END OF SECTION

SECTION 05 12 00

STRUCTURAL STEEL FRAMING

PART 1 - GENERAL

1.1 RELATED DOCUMENTS

A. Drawings and general provisions of the Contract, including General and Supplementary Conditions and Division 1 Specification Sections, apply to this Section.

1.2 SUMMARY

A. This Section includes structural steel.

B. This Section includes structural steel and architecturally exposed structural steel.

C. Related Sections: The following Sections contain requirements that relate to this Section:

1. Division 1 Section "Quality Control" for independent testing agency procedures and administrative requirements.
2. Division 5 Section "Metal Fabrications" for loose steel bearing plates and miscellaneous steel framing.
3. Division 9 Section "Special Coatings" for surface preparation and priming requirements.
4. Division 9 Section "Painting" for surface preparation and priming requirements.

1.3 PERFORMANCE REQUIREMENTS

A. Structural Performance: Engineer structural steel connections required by the Contract Documents to be selected or completed by the fabricator to withstand design loadings indicated.

B. Engineering Responsibility: Engage a fabricator who utilizes a qualified professional engineer to prepare calculations, and other structural data for structural steel connections.

1.4 QUALITY ASSURANCE

A. Installer Qualifications: Engage an experienced Installer who has completed structural steel work similar in material, design, and extent to that indicated for this Project and with a record of successful in-service performance.

B. Fabricator Qualifications: Engage a firm experienced in fabricating structural steel similar to that indicated for this Project and with a record of successful in-service performance, as well as sufficient production capacity to fabricate structural steel without delaying the Work.

1. Fabricator must participate in the AISC Quality Certification Program and be designated an AISC-Certified Plant as follows:

a. Category: Category I, conventional steel structures.
b. Category: Category II, complex steel building structures.
c. Fabricator shall be registered with and approved by authorities having jurisdiction.

C. Comply with applicable provisions of the following specifications and documents:

1. AISC's "Specification for Structural Steel Buildings--Allowable Stress Design and Plastic Design."
2. AISC's "Load and Resistance Factor Design (LFRD) Specification for Structural Steel Buildings."
3. AISC's "Specification for Allowable Stress Design of Single-Angle Members."
4. AISC's "Specification for Load and Resistance Factor Design of Single-Angle Members."
5. AISC's "Seismic Provisions for Structural Steel Buildings."
6. ASTM A 6 (ASTM A 6M) "Specification for General Requirements for Rolled Steel Plates, Shapes, Sheet Piling, and Bars for Structural Use."
7. Research Council on Structural Connections' (RCSC) "Specification for Structural Joints Using ASTM A 325 or A 490 Bolts."
8. Research Council on Structural Connections' (RCSC) "Load and Resistance Factor Design Specification for Structural Joints Using ASTM A 325 or A 490 Bolts."

D. Professional Engineer Qualifications: A professional engineer who is legally authorized to practice in the jurisdiction where Project is located and who is experienced in providing engineering services of the kind indicated. Engineering services are defined as those performed for projects with structural steel framing that are similar to that indicated for this Project in material, design, and extent.

E. Welding Standards: Comply with applicable provisions of AWS D1.1 "Structural Welding Code--Steel."

1. Present evidence that each welder has satisfactorily passed AWS qualification tests for welding processes involved and, if pertinent, has undergone recertification.

1.5 DELIVERY, STORAGE, AND HANDLING

A. Deliver structural steel to Project site in such quantities and at such times to ensure continuity of installation.

B. Store materials to permit easy access for inspection and identification. Keep steel members off the ground by using pallets, platforms, or other supports. Protect steel members and packaged materials from erosion and deterioration.

1. Store fasteners in a protected place. Clean and re-lubricate bolts and nuts that become dry or rusty before use.
2. Do not store materials on structure in a manner that might cause distortion or damage to members or supporting structures. Repair or replace damaged materials or structures as directed.

1.6 SEQUENCING

A. Supply anchorage items to be embedded in or attached to other construction without delaying the Work. Provide setting diagrams, templates, instructions, and directions, as required, for installation.

PART 2 - PRODUCTS

2.1 MATERIALS

A. Structural Steel Shapes, Plates, and Bars: As follows:

1. Carbon Steel: ASTM A 36 (ASTM A 36M).
2. High-Strength, Low-Alloy Columbium-Vanadium Steel: ASTM A 572 (ASTM A 572M), Grade 50.
3. High-Strength, Low-Alloy Structural Steel: ASTM A 588 (ASTM A 588M), Grade 50, corrosion resistant.

B. Cold-Formed Structural Steel Tubing: ASTM A 500, Grade B.

C. Hot-Formed Structural Steel Tubing: ASTM A 501.

D. Steel Pipe: ASTM A 53, Type E or S, Grade B.

1. Weight Class: Standard.
2. Weight Class: Extra strong.
3. Weight Class: Double-extra strong.
4. Finish: Black.
5. Finish: Galvanized.
6. Finish: Black, except where indicated to be galvanized.

E. Carbon-Steel Castings: ASTM A 27, Grade 65-35 (ASTM A 27M, Grade 450-240), medium-strength carbon steel.

F. High-Strength Steel Castings: ASTM A 148, Grade 80-50 (ASTM A 148M, (Grade 550-345).

G. Shear Connectors: ASTM A 108, Grade 1015 through 1020, headed-stud type, cold-finished carbon steel, AWS D1.1, Type B.

H. Anchor Rods, Bolts, Nuts, and Washers: As follows:

1. Unheaded Rods: ASTM A 36 (ASTM A 36M).
2. Unheaded Rods: ASTM A 572, Grade 50 (ASTM A 572M, Grade 345).
3. Unheaded Bolts: ASTM A 687, high strength.
4. Headed Bolts: ASTM A 307, Grade A (ASTM F 568, Property Class 4.6); carbon-steel, hex-head bolts; and carbon-steel nuts.
5. Headed Bolts: ASTM A 325 (ASTM A 325M), Type 1, heavy hex steel structural bolts and heavy hex carbon-steel nuts.

6. Headed Bolts: ASTM A 490 (ASTM A 490M), Type 1, heavy hex steel structural bolts and heavy hex carbon-steel nuts.
7. Washers: ASTM A 36 (ASTM A 36M).

I. Nonhigh-Strength Bolts, Nuts, and Washers: ASTM A 307, Grade A (ASTM F 568, Property Class 4.6); carbon-steel, hex-head bolts; carbon-steel nuts; and flat, unhardened steel washers.

1. Finish: Plain, uncoated.
2. Finish: Hot-dip zinc-coating, ASTM A 153, Class C.
3. Finish: Mechanically deposited zinc-coating, ASTM B 695, Class 50.

J. High-Strength Bolts, Nuts, and Washers: ASTM A 325 (ASTM A 325M), Type 1, heavy hex steel structural bolts, heavy hex carbon-steel nuts, and hardened carbon-steel washers.

1. Finish: Plain, uncoated.
2. Finish: Hot-dip zinc-coating, ASTM A 153, Class C.
3. Finish: Mechanically deposited zinc-coating, ASTM B 695, Class 50.
4. Direct-Tension Indicators: ASTM F 959, Type 325.
   a. Finish: Plain, uncoated.
   b. Finish: Mechanically deposited zinc-coating, ASTM B 695, Class 50.
   c. Finish: Mechanically deposited zinc-coating, ASTM B 695, Class 50, epoxy coated.

K. High-Strength Bolts, Nuts, and Washers: ASTM A 490 (ASTM A 490M), Type 1, heavy hex steel structural bolts, heavy hex carbon-steel nuts, and hardened carbon-steel washers, uncoated.

1. Direct-Tension Indicators: ASTM F 959, Type 490, uncoated.

L. Welding Electrodes: Comply with AWS requirements.

2.2 PRIMER

A. Primer: Fast-curing, lead- and chromate-free, universal modified-alkyd primer with good resistance to normal atmospheric corrosion, complying with performance requirements of FS TT-P-664.

B. Primer: SSPC-Paint 25; red iron oxide, zinc oxide, raw linseed oil and alkyd primer.

C. Primer: SSPC-Paint 23, latex primer.

D. Primer: SSPC-Paint 15, Type I, red oxide.

E. Primer: Fabricator's standard lead- and chromate-free, nonasphaltic, rust-inhibiting primer.

F. Primer: Nonasphaltic primer complying with SSPC's "Painting System Guide No. 7.00."

G. Galvanizing Repair Paint: High-zinc-dust-content paint for regalvanizing welds and repair painting galvanized steel, with dry film containing not less than 93 percent zinc dust by weight, and complying with DOD-P-21035A or SSPC-Paint 20.

2.3 GROUT

A. Cement Grout: Portland cement, ASTM C 150, Type I; and clean, natural sand, ASTM C 404, Size No. 2. Mix at ratio of 1 part cement to 2-1/2 parts sand, by volume, with minimum water required for placement and hydration.

B. Metallic, Shrinkage-Resistant Grout: Premixed, factory-packaged, ferrous aggregate grout, complying with ASTM C 1107, of consistency suitable for application, and a 30-minute working time.

C. Nonmetallic, Shrinkage-Resistant Grout: Premixed, nonmetallic, noncorrosive, nonstaining grout containing selected silica sands, portland cement, shrinkage compensating agents, plasticizing and water-reducing agents, complying with ASTM C 1107, of consistency suitable for application, and a 30-minute working time.

2.4 FABRICATION

A. Fabricate and assemble structural steel in shop to greatest extent possible. Fabricate structural steel according to AISC specifications referenced in this Section and in Shop Drawings.

1. Camber structural steel members where indicated.
2. Identify high-strength structural steel according to ASTM A 6 (ASTM A 6M) and maintain markings until steel has been erected.
3. Mark and match-mark materials for field assembly.
4. Fabricate for delivery a sequence that will expedite erection and minimize field handling of structural steel.
5. Complete structural steel assemblies, including welding of units, before starting shop-priming operations.
6. Comply with fabrication tolerance limits of AISC's "Code of Standard Practice for Steel Buildings and Bridges" for structural steel.

B. Fabricate architecturally exposed structural steel with exposed surfaces smooth, square, and free of surface blemishes, including pitting, rust and scale seam marks, roller marks, rolled trade names, and roughness.

1. Remove blemishes by filling, grinding, or by welding and grinding, prior to cleaning, treating, and shop priming.
2. Comply with fabrication requirements, including tolerance limits, of AISC's "Code of Standard Practice for Steel Buildings and Bridges" for architecturally exposed structural steel.

C. Thermal Cutting: Perform thermal cutting by machine to greatest extent possible.

1. Plane thermally cut edges to be welded.

D. Finishing: Accurately mill ends of columns and other members transmitting loads in bearing.

E. Shear Connectors: Prepare steel surfaces as recommended by manufacturer of shear connectors. Use automatic end welding of headed-stud shear connectors according to AWS D1.1 and manufacturer's printed instructions.

F. Steel Wall Framing: Select true and straight members for fabricating steel wall framing to be attached to structural steel framing. Straighten as required to provide uniform, square, and true members in completed wall framing.

G. Welded Door Frames: Build up welded door frames attached to structural steel framing. Weld exposed joints continuously and grind smooth. Plug-weld fixed steel bar stops to frames. Secure removable stops to frames with countersunk, cross-recessed head machine screws, uniformly spaced not more than 10 inches (250 mm) o.c., unless otherwise indicated.

H. Holes: Provide holes required for securing other work to structural steel framing and for passage of other work through steel framing members, as shown on Shop Drawings.

1. Cut, drill, or punch holes perpendicular to metal surfaces. Do not flame-cut holes or enlarge holes by burning. Drill holes in bearing plates.
2. Weld threaded nuts to framing and other specialty items as indicated to receive other work.

2.5 SHOP CONNECTIONS

A. Shop install and tighten nonhigh-strength bolts, except where high-strength bolts are indicated.

B. Shop install and tighten high-strength bolts according to RCSC's "Specification for Structural Joints Using ASTM A 325 or A 490 Bolts."

C. Shop install and tighten high-strength bolts according to RCSC's "Load and Resistance Factor Design Specification for Structural Joints Using ASTM A 325 or A 490 Bolts."

1. Bolts: ASTM A 325 (ASTM A 325M) high-strength bolts, unless otherwise indicated.
2. Bolts: ASTM A 490 (ASTM A 490M) high-strength bolts, unless otherwise indicated.
3. Connection Type: Snug tightened, unless indicated as slip-critical, direct-tension, or tensioned shear/bearing connections.
4. Connection Type: Slip-critical, direct-tension, or tensioned shear/bearing connections as indicated.

D. Weld Connections: Comply with AWS D1.1 for procedures, appearance and quality of welds, and methods used in correcting welding work.

1. Assemble and weld built-up sections by methods that will maintain true alignment of axes without warp.
2. Verify that weld sizes, fabrication sequence, and equipment used for architecturally exposed structural steel will limit distortions to allowable tolerances. Prevent surface bleeding of back-side welding on exposed steel surfaces. Grind smooth exposed fillet welds 1/2 inch (13 mm) and larger. Grind flush butt welds. Dress exposed welds.

2.6 SHOP PRIMING

A. Shop prime steel surfaces, except the following:

1. Surfaces embedded in concrete or mortar. Extend priming of partially embedded members to a depth of 2 inches (50 mm).
2. Surfaces to be field welded.
3. Surfaces to be high-strength bolted with slip-critical connections.
4. Surfaces to receive sprayed-on fireproofing.
5. Galvanized surfaces.

B. Surface Preparation: Clean surfaces to be painted. Remove loose rust, loose mill scale, and spatter, slag, or flux deposits. Prepare surfaces according to SSPC specifications as follows:

1. SSPC-SP 2 "Hand Tool Cleaning."
2. SSPC-SP 3 "Power Tool Cleaning."
3. SSPC-SP 5 "White Metal Blast Cleaning."
4. SSPC-SP 6 "Commercial Blast Cleaning."
5. SSPC-SP 7 "Brush-Off Blast Cleaning."
6. SSPC-SP 8 "Pickling."
7. SSPC-SP 10 "Near-White Blast Cleaning."
8. SSPC-SP 11 "Power Tool Cleaning to Bare Metal."

C. Priming: Immediately after surface preparation, apply primer according to manufacturer's instructions and at rate recommended by SSPC to provide a dry film thickness of not less than 1.5 mils (0.038 mm). Use priming methods that result in full coverage of joints, corners, edges, and exposed surfaces.

1. Stripe paint corners, crevices, bolts, welds, and sharp edges.
2. Apply 2 coats of shop paint to inaccessible surfaces after assembly or erection. Change color of second coat to distinguish it from first.

D. Painting: Apply a 1-coat, nonasphaltic primer complying with SSPC's "Painting System Guide No. 7.00" to provide a dry film thickness of not less than 1.5 mils (0.038 mm).

2.7 GALVANIZING

A. Hot-Dip Galvanized Finish: Apply zinc coating by the hot-dip process to structural steel indicated for galvanizing according to ASTM A 123.

2.8 SOURCE QUALITY CONTROL

A. Correct deficiencies in or remove and replace structural steel that inspections and test reports indicate do not comply with specified requirements.

B. Additional testing, at Contractor's expense, will be performed to determine compliance of corrected Work with specified requirements.

C. Shop-bolted connections will be tested and inspected according to RCSC's "Specification for Structural Joints Using ASTM A 325 or A 490 Bolts."

D. Shop-bolted connections will be tested and inspected according to RCSC's "Load and Resistance Factor Design Specification for Structural Joints Using ASTM A 325 or A 490 Bolts."

1. Direct-tension indicator gaps will be verified to comply with ASTM F 959, Table 2.

E. In addition to visual inspection, shop-welded connections will be inspected and tested according to AWS D1.1 and the inspection procedures listed below, at testing agency's option.

1. Liquid Penetrant Inspection: ASTM E 165.
2. Magnetic Particle Inspection: ASTM E 709; performed on root pass and on finished weld. Cracks or zones of incomplete fusion or penetration will not be accepted.
3. Radiographic Inspection: ASTM E 94 and ASTM E 142; minimum quality level "2-2T."
4. Ultrasonic Inspection: ASTM E 164.

F. In addition to visual inspection, shop-welded shear connectors will be inspected and tested according to requirements of AWS D1.1 for stud welding and as follows:

1. Bend tests will be performed when visual inspections reveal either less than a continuous 360-degree flash or welding repairs to any shear connector.
2. Tests will be conducted on additional shear connectors when weld fracture occurs on shear connectors already tested, according to requirements of AWS D1.1.

PART 3 - EXECUTION

3.1 EXAMINATION

A. Before erection proceeds, and with the steel erector present, verify elevations of concrete and masonry bearing surfaces and locations of anchorages for compliance with requirements.

B. Do not proceed with erection until unsatisfactory conditions have been corrected.

3.2 PREPARATION

A. Provide temporary shores, guys, braces, and other supports during erection to keep structural steel secure, plumb, and in alignment against temporary construction loads and loads equal in intensity to design loads. Remove temporary supports when permanent structural steel, connections, and bracing are in place, unless otherwise indicated.

1. Do not remove temporary shoring supporting composite deck construction until cast-in-place concrete has attained its design compressive strength.

3.3 ERECTION

A. Set structural steel accurately in locations and to elevations indicated and according to AISC specifications referenced in this Section.

B. Base and Bearing Plates: Clean concrete and masonry bearing surfaces of bond-reducing materials and roughen surfaces prior to setting base and bearing plates. Clean bottom surface of base and bearing plates.

1. Set base and bearing plates for structural members on wedges, shims, or setting nuts as required.
2. Tighten anchor bolts after supported members have been positioned and plumbed. Do not remove wedges or shims but, if protruding, cut off flush with edge of base or bearing plate prior to packing with grout.
3. Pack grout solidly between bearing surfaces and plates so no voids remain. Finish exposed surfaces, protect installed materials, and allow to cure.
   a. Comply with manufacturer's instructions for proprietary grout materials.

C. Maintain erection tolerances of structural steel within AISC's "Code of Standard Practice for Steel Buildings and Bridges."

1. Maintain erection tolerances of architecturally exposed structural steel within AISC's "Code of Standard Practice for Steel Buildings and Bridges."

D. Align and adjust various members forming part of complete frame or structure before permanently fastening. Before assembly, clean bearing surfaces and other surfaces that will be in permanent contact. Perform necessary adjustments to compensate for discrepancies in elevations and alignment.

1. Level and plumb individual members of structure.
2. Establish required leveling and plumbing measurements on mean operating temperature of structure. Make allowances for difference between temperature at time of erection and mean temperature at which structure will be when completed and in service.

E. Splice members only where indicated.

F. Remove erection bolts on welded, architecturally exposed structural steel; fill holes with plug welds; and grind smooth at exposed surfaces.

G. Do not use thermal cutting during erection.

H. Finish sections thermally cut during erection equal to a sheared appearance.

I. Do not enlarge unfair holes in members by burning or by using drift pins. Ream holes that must be enlarged to admit bolts.

3.4 FIELD CONNECTIONS

A. Install and tighten nonhigh-strength bolts, except where high-strength bolts are indicated.

B. Install and tighten high-strength bolts according to RCSC's "Specification for Structural Joints Using ASTM A 325 or A 490 Bolts."

C. Install and tighten high-strength bolts according to RCSC's "Load and Resistance Factor Design Specification for Structural Joints Using ASTM A 325 or A 490 Bolts."

1. Bolts: ASTM A 325 (ASTM A 325M) high-strength bolts, unless otherwise indicated.
2. Bolts: ASTM A 490 (ASTM A 490M) high-strength bolts, unless otherwise indicated.
3. Connection Type: Snug tightened, unless indicated as slip-critical, direct-tension, or tensioned shear/bearing connections.
4. Connection Type: Slip-critical, direct-tension, or tensioned shear/bearing connections as indicated.

D. Weld Connections: Comply with AWS D1.1 for procedures, appearance and quality of welds, and methods used in correcting welding work.

1. Comply with AISC specifications referenced in this Section for bearing, adequacy of temporary connections, alignment, and removal of paint on surfaces adjacent to field welds.
2. Assemble and weld built-up sections by methods that will maintain true alignment of axes without warp.
3. Verify that weld sizes, fabrication sequence, and equipment used for architecturally exposed structural steel will limit distortions to allowable tolerances. Prevent surface bleeding of back-side welding on exposed steel surfaces. Grind smooth exposed fillet welds 1/2 inch (13 mm) and larger. Grind flush butt welds. Dress exposed welds.

3.5 FIELD QUALITY CONTROL

A. Owner will engage an independent testing and inspecting agency to perform field inspections and tests and to prepare test reports.

1. Testing agency will conduct and interpret tests and state in each report whether tested Work complies with or deviates from requirements.

B. Correct deficiencies in or remove and replace structural steel that inspections and test reports indicate do not comply with specified requirements.

C. Additional testing, at Contractor's expense, will be performed to determine compliance of corrected Work with specified requirements.

D. Field-bolted connections will be tested and inspected according to RCSC's "Specification for Structural Joints Using ASTM A 325 or A 490 Bolts."

E. Field-bolted connections will be tested and inspected according to RCSC's "Load and Resistance Factor Design Specification for Structural Joints Using ASTM A 325 or A 490 Bolts."

1. Direct-tension indicator gaps will be verified to comply with ASTM F 959, Table 2.

F. In addition to visual inspection, field-welded connections will be inspected and tested according to AWS D1.1 and the inspection procedures listed below, at testing agency's option.

1. Liquid Penetrant Inspection: ASTM E 165.

2. Magnetic Particle Inspection: ASTM E 709; performed on root pass and on finished weld. Cracks or zones of incomplete fusion or penetration will not be accepted.
3. Radiographic Inspection: ASTM E 94 and ASTM E 142; minimum quality level "2-2T."
4. Ultrasonic Inspection: ASTM E 164.
5. In addition to visual inspection, field-welded shear connectors will be inspected and tested according to requirements of AWS D1.1 for stud welding and as follows:
6. Bend tests will be performed when visual inspections reveal either less than a continuous 360-degree flash or welding repairs to any shear connector.
7. Tests will be conducted on additional shear connectors when weld fracture occurs on shear connectors already tested, according to requirements of AWS D1.1.

3.6 CLEANING

A. Touchup Painting: Immediately after erection, clean field welds, bolted connections, and abraded areas of shop paint. Apply paint to exposed areas using same material as used for shop painting.

1. Apply by brush or spray to provide a minimum dry film thickness of 1.5 mils (0.038 mm).

B. Touchup Painting: Cleaning and touchup painting of field welds, bolted connections, and abraded areas of shop paint on structural steel are included in Division 9 Section "Painting."

C. Galvanized Surfaces: Clean field welds, bolted connections, and abraded areas and apply galvanizing repair paint according to ASTM A 780.

END OF SECTION

SECTION 06100

ROUGH CARPENTRY

1. PART 1 GENERAL

1.1 RELATED DOCUMENTS

A. Drawings and general provisions of the Contract, including General and Supplementary Conditions and Division 1 Specification Sections, apply to this Section.

1.2 SUMMARY

A. This Section includes the following:

1. Framing with dimension lumber.
2. Framing with engineered wood products.
3. Wood furring, grounds, nailers, and blocking.
4. Sheathing.

B. Related Sections: The following Sections contain requirements that relate to this Section:

1. Section 073113 - Asphalt Shingle Roofing Systems

1.3 DEFINITIONS

A. Rough Carpentry: Carpentry work not specified in other Sections and not exposed, unless otherwise specified.

B. Exposed Framing: Dimension lumber not concealed by other construction and indicated to receive a stained or natural finish.

1.4 DELIVERY, STORAGE, AND HANDLING

A. Keep materials under cover and dry. Protect from weather and contact with damp or wet surfaces. Stack lumber, plywood, and other panels. Provide for air circulation within and around stacks and under temporary coverings.
1. For lumber and plywood pressure treated with waterborne chemicals, place spacers between each bundle to provide air circulation.

2. PART 2 PRODUCTS

2.1 LUMBER, GENERAL

A. Lumber Standards: Comply with DOC PS 20, "American Softwood Lumber Standard," and with applicable grading rules of inspection agencies certified by ALSC's Board of Review.

B. Inspection Agencies: Inspection agencies, and the abbreviations used to reference them, include the following:

1. NELMA - Northeastern Lumber Manufacturers Association.
2. NLGA - National Lumber Grades Authority (Canadian).
3. RIS - Redwood Inspection Service.
4. SPIB - Southern Pine Inspection Bureau.
5. WCLIB - West Coast Lumber Inspection Bureau.
6. WWPA - Western Wood Products Association.

C. Grade Stamps: Provide lumber with each piece factory marked with grade stamp of inspection agency evidencing compliance with grading rule requirements and identifying grading agency, grade, species, moisture content at time of surfacing, and mill.

1. For exposed lumber, furnish pieces with grade stamps applied to ends or back of each piece, or omit grade stamps and provide grade-compliance certificates issued by inspection agency.

2.2 DIMENSION LUMBER

A. General: Provide dimension lumber of grades indicated according to the ALSC National Grading Rule (NGR) provisions of the inspection agency indicated.

B. Framing Other than Non-Load-Bearing Partitions: Provide framing of the following grade and species:

1. Grade: No. 2 or better.
2. Species and Grade: Any species of machine stress-rated (MSR) dimension lumber with a grade of 1800f-1.6E.

2.3 MISCELLANEOUS LUMBER

A. General: Provide lumber for support or attachment of other construction, including rooftop equipment curbs and support bases, cant strips, bucks, nailers, blocking, furring, grounds, stripping, and similar members.

B. Fabricate miscellaneous lumber from dimension lumber of sizes indicated and into shapes shown.

C. Moisture Content: 19 percent maximum for lumber items not specified to receive wood preservative treatment.

D. Grade: For dimension lumber sizes, provide No. 3 or Standard grade lumber per ALSC's NGRs of any species. For board-size lumber, provide No. 3 Common grade per NELMA, NLGA, or WWPA; No. 2 grade per SPIB; or Standard grade per NLGA, WCLIB or WWPA of any species.

2.4 ENGINEERED WOOD PRODUCTS

A. General: Provide engineered wood products acceptable to authorities having jurisdiction and for which current model code research or evaluation reports exist that evidence compliance with building code in effect for Project.

1. Allowable Design Stresses: Provide engineered wood products with allowable design stresses, as published by manufacturer, that meet or exceed those indicated. Manufacturer's published values shall be determined from empirical data or by rational engineering analysis, and demonstrated by comprehensive testing performed by a qualified independent testing agency.

B. Laminated-Veneer Lumber: Lumber manufactured by laminating wood veneers in a continuous press using an exterior-type adhesive complying with ASTM D 2559 to produce members with grain of veneers parallel to their lengths and complying with the following requirements:

1. Extreme Fiber Stress in Bending: 2500 psi (17 MPa) for 12-inch nominal-(286-mm actual-) depth members.
2. Modulus of Elasticity: 2,000,000 psi (13 800 MPa).
3. Tension Parallel to Grain: 1850 psi (13 MPa).
4. Compression Parallel to Grain: 2800 psi (19 MPa).
5. Compression Perpendicular to Grain: 400 psi (3 MPa) perpendicular to and 500 psi (3.5 MPa) and parallel to glue line.
6. Horizontal Shear: 285 psi (2 MPa) perpendicular to and 190 psi (1.3 MPa) parallel to glue line.

C. Parallel-Strand Lumber: Lumber manufactured by laying up wood strands using an exterior-type adhesive complying with ASTM D 2559, and cured under pressure to produce members with grain of strands parallel to their lengths and complying with the following requirements:

1. Extreme Fiber Stress in Bending: 2900 psi (20 MPa) for 12-inch nominal-(286-mm actual-) depth members.
2. Modulus of Elasticity: 2,000,000 psi (13 800 MPa).
3. Tension Parallel to Grain: 2400 psi (16.5 MPa).
4. Compression Parallel to Grain: 2900 psi (20 MPa).
5. Compression Perpendicular to Grain: 400 psi (3 MPa) perpendicular to and 600 psi (4.1 MPa) and parallel to wide face of strands.
6. Horizontal Shear: 210 psi (1.4 MPa) perpendicular to and 290 psi (2 MPa) and parallel to wide face of strands.

2.5 AIR-INFILTRATION BARRIER

A. Asphalt-saturated organic felt complying with ASTM D 226, Type I (No. 15 asphalt felt), unperforated.

B. Air retarder complying with ASTM E 1677; made from polyolefins; either cross-laminated films, woven strands, or spunbonded fibers; coated or uncoated; with or without perforations to transmit water vapor but not liquid water; and as follows:

1. Minimum Thickness: 3 mils (0.08 mm).
2. Minimum Water-Vapor Transmission: 10 perms (575 ng/Pa x s x sq. m)

when tested according to ASTM E 96, Procedure A.

3. Maximum Flame Spread: 25 per ASTM E 84.
4. Minimum Allowable Exposure Time: 3 months.

2.6 FASTENERS

A. General: Provide fasteners of size and type indicated that comply with requirements specified in this Article for material and manufacturer.

1. Where rough carpentry is exposed to weather, in ground contact, or in area of high relative humidity, provide fasteners with a hot-dip zinc coating per ASTM A 153 or of Type 304 stainless steel.

B. Nails, Wire, Brads, and Staples: FS FF-N-105.

C. Power-Driven Fasteners: CABO NER-272.

D. Wood Screws: ASME B18.6.1.

E. Lag Bolts: ASME B18.2.1. (ASME B18.2.3.8M)

F. Bolts: Steel bolts complying with ASTM A 307, Grade A (ASTM F 568, Property Class 4.6); with ASTM A 563 (ASTM A 563M) hex nuts and, where indicated, flat washers.

3. PART 3 EXECUTION

3.1 INSTALLATION, GENERAL

A. Discard units of material with defects that impair quality of rough carpentry and that are too small to use with minimum number of joints or optimum joint arrangement.

B. Set rough carpentry to required levels and lines, with members plumb, true to line, cut, and fitted.

C. Fit rough carpentry to other construction; scribe and cope as required for accurate fit. Correlate location of furring, nailers, blocking, grounds, and similar supports to allow attachment of other construction.

D. Apply field treatment complying with AWPA M4 to cut surfaces of preservative-treated lumber and plywood.

E. Securely attach rough carpentry work to substrate by anchoring and fastening as indicated, complying with the following:

1. CABO NER-272 for power-driven staples, P-nails, and allied fasteners.
2. Published requirements of metal framing anchor manufacturer.
3. "Recommended Nailing Schedule" of referenced framing standard and with AFPA's "National Design Specifications for Wood Construction."
4. "Table 23-I-Q--Nailing Schedule" of the Uniform Building Code.

5. "Table 2305.2--Fastening Schedule" of the BOCA National Building Code.
6. "Table 1705.1--Fastening Schedule," of the Standard Building Code.

F. Use common wire nails, unless otherwise indicated. Use finishing nails for finish work. Select fasteners of size that will not fully penetrate members where opposite side will be exposed to view or will receive finish materials. Make tight connections between members. Install fasteners without splitting wood; predrill as required.

G. Use hot-dip galvanized or stainless-steel nails where rough carpentry is exposed to weather, in ground contact, or in area of high relative humidity.

H. Countersink nail heads on exposed carpentry work and fill holes with wood filler.

3.2 WOOD GROUNDS, NAILERS, BLOCKING, AND SLEEPERS

A. Install wood grounds, nailers, blocking, and sleepers where shown and where required for screeding or attaching other work. Form to shapes shown and cut as required for true line and level of attached work. Coordinate locations with other work involved.

B. Attach to substrates to support applied loading. Recess bolts and nuts flush with surfaces, unless otherwise indicated. Build into masonry during installation of masonry work. Where possible, anchor to formwork before concrete placement.

C. Install permanent grounds of dressed, preservative-treated, key-beveled lumber not less than 1-1/2 inches (38 mm) wide and of thickness required to bring face of ground to exact thickness of finish material. Remove temporary grounds when no longer required.

3.3 WOOD FRAMING, GENERAL

A. Framing Standard: Comply with AFPA's "Manual for Wood Frame Construction," unless otherwise indicated.

B. Framing with Engineered Wood Products: Install engineered wood products to comply with manufacturer's written instructions.

C. Install framing members of size and at spacing indicated.

D. Do not splice structural members between supports.

E. Firestop concealed spaces of wood-framed walls and partitions at each floor level and at ceiling line of top story. Where firestopping is not inherent in framing system used, provide closely fitted wood blocks of 2-inch nominal- (38-mm actual-) thickness lumber of same width as framing members.

END OF SECTION

SECTION 07 31 13

ASPHALT SHINGLES

PART 1 - GENERAL

1.1 SECTION INCLUDES

A. Asphalt shingles and accessories for structures with attic spaces.

1.2 RELATED SECTIONS

A. Section 07 05 00 - Common Work Results for Thermal and Moisture Protection.

B. Section 07 62 00 - Sheet Metal Flashing and Trim.

C. Section 07 71 23 - Manufactured Gutters and Downspouts.

1.3 REFERENCES

A. Reference Standards are latest editions, unless noted otherwise.

B. Flashing, ASTM International (ASTM):
1. ASTM A653/A653M - Standard Specification for Steel Sheet, Zinc Coated (Galvanized) or Zinc-Iron Alloy-Coated (Galvannealed) by the Hot-Dip Process.
2. ASTM B209 - Standard Specification for Aluminum and Aluminum-Alloy Sheet and Plate.
3. ASTM B370 - Standard Specification for Copper Sheet and Strip for Building Construction.

C. Roofing Cement, ASTM International (ASTM):
1. ASTM D4586 - Standard Specification for Asphalt Roof Cement, Asbestos-Free.
2. CAN/CGSB 37.4 - Fibrated, Cutback Asphalt, Lap Cement for Asphalt Roofing.
3. CAN/CGSB 37.5 - Cutback Asphalt Plastic Cement.
4. ASTM D3019 - Standard Specification for Lap Cement, Asbestos-Free.
5. ASTM D2822 - Standard Specification for Asphalt Roof Cement.

D. Fasteners, ASTM International (ASTM):
1. ASTM F1667 - Specification for Driven Fasteners, Nails, Spikes and Staples, Type I, Style 20.
2. CSA B 111 - Wire Nails, Spikes, and Staples.

E. Shingles, ASTM International (ASTM):
1. ASTM D226 / D226M - 09 Standard Specification for Asphalt Saturated Organic Felt Used in Roofing and Waterproofing.
2. ASTM D1970 - Standard Specification for Self-Adhering Polymer Modified Bituminous Sheet Materials used as Steep Roofing Underlayment for Ice Dam Protection.
3. ASTM C1549 - Standard Test Method for Determination of Solar Reflectance Near Ambient Temperature Using a Portable Solar Reflectometer.
4. ASTM D1970 - Standard Specification for Self-Adhering Polymer Modified Bituminous Sheet Materials Used as Steep Roofing Underlayment for Ice Dam Protection.

5. ASTM D3018 - Standard Specification for Class A Asphalt Shingles Surfaced with Mineral Granules.
6. ASTM D3161 - Standard Test Method for Wind-Resistance of Asphalt Shingles (Fan-Induced Method).
7. ASTM D4601/D4601M - Standard Specification for Asphalt-Coated Glass Fiber Base Sheet Used in Roofing.
8. ASTM D7158/D7158M-11 - Standard Test Method for Wind Resistance of Asphalt Shingles (Uplift Force/Uplift Resistance Method).
9. ASTM D3462 - Standard Specification for Asphalt Shingles Made From Glass Felt and Surfaced with Mineral Granules.
10. ASTM D4869 / D4869M - 05(2011) - Standard Specification for Asphalt Saturated Organic Felt Underlayment Used in Steep Slope Roofing.
11. ASTM E108 - 11 - Standard Test Methods for Fire Tests of Roof Coverings (ULC S107).
12. ASTM E903 - Standard Test Method for Solar Absorptance, Reflectance, and Transmission of Materials Using Integrating Spheres.

F. Asphalt Roofing Manufacturers Association (ARMA).

G. Canadian Asphalt Shingle Manufacturers' Association (CASMA):
1. CAN/CSA A123.16 - Asphalt-Coated Glass-Base Sheet.
2. CSA A 123.2 Asphalt Coated Roofing Sheets.
3. CSA A 123.3-05 (R2010) Asphalt Saturated Organic Roofing Felt.
4. CSA A 123.3-22-08 - Self-Adhering Polymer Modified Bituminous Sheet Materials Used As Steep Roofing Underlayment For Ice Dam Protection.
5. CAN/CSA A 123.5-05 (R2010) Asphalt Shingles Made From Glass Felt and Surfaced with Mineral Granule.
6. CAN2 51.32 Sheathing, Membrane, Breather Type Paper.
7. CAN3 A 123.51 -M85 (R2011) Asphalt Shingle Application on Roof Slopes 1:3 and Steeper.
8. CAN3 A 123.52 Asphalt Shingle Application on Roof Slopes 1:6 to Less than 1:3.

H. Canadian Roofing Contractors Association (CRCA):

I. FM Class Number 4473 Specification Test Standard for Impact Resistance Testing of Rigid Roofing Materials by Impacting with Freezer Ice Balls.

J. International Building Code (IBC).

K. National Roofing Contractors Association (NRCA).

L. Underwriters Laboratories (UL):
1. UL 2218 - Standard for Impact Resistance of Prepared Roof Covering Materials.

1.4 SUBMITTALS

A. Submit under provisions of Section 01 30 00 - Administrative Requirements.

B. Product Data: Manufacturer's data sheets, including product characteristics, performance criteria, on each product to be used, including:
1. Preparation instructions and recommendations.
2. Storage and handling requirements and recommendations.
3. Installation methods.

C. Shop Drawings: Indicate specially configured metal flashing, jointing methods and locations, fastening methods and locations, and installation details as required by Project conditions.

D. Certificate of Compliance: Provide Certificate of Compliance from the manufacturer or an independent laboratory indicating that the asphalt fiberglass shingles made in normal production meet or exceed the requirements of the following:
   1. ASTM E108 indicating Class A Fire Resistance.
   2. ASTM D3161/D7158 indicating class of Wind Resistance.
   3. ASTM D3462/CSA A 123.5-05 indicating product properties.
   4. FM Class Number 4473 indicating Class 4 Impact Resistance when applicable.
   5. State of Florida Approval where applicable.

E. Selection Samples: For each finish product specified, two complete sets of color chips representing manufacturer's full range of available colors and patterns.
   1. Submit duplicate samples of full-sized shingles to match finish and profile for each type of roofing shingle to be used on the Project.

F. Verification Samples: For each finish product specified, two samples, minimum size 6 inches (150 mm) square representing actual product, color, and patterns.
   1. Submit duplicate samples of full-sized shingles to match finish and profile for each type of roofing shingle to be used on the Project.

1.5 REGULATORY REQUIREMENTS

A. Provide a roofing system achieving an ASTM E108 Class A fire classification.

B. Provide a roofing system achieving an ENERGY STAR rating.

C. Ensure that materials and fastening methods meet requirements of jurisdictional authorities. The Installer shall be licensed or otherwise authorized to install roofing in the jurisdiction the work is to be performed in.

D. Install all roofing products in accordance with all Federal, Provincial, State and local building codes.

E. All work shall be performed in a manner consistent with current OSHA guidelines.

1.6 QUALITY ASSURANCE

A. Manufacturer Qualifications: Minimum 5 year experience manufacturing similar products.

B. Provide all primary roofing products including shingles, underlayment, and leak barrier by a single manufacturer.

C. Installer Qualifications: Where required for extended limited warranty coverage, the installer shall be approved or otherwise authorized by IKO to install all roofing products to be installed on this project. Work is to be executed only by those skilled to perform it expeditiously and who has been responsible for satisfactory installations similar to that specified during a period of at least the immediate past three years.

D. Mock-Up: Provide a mock-up for evaluation of surface preparation techniques and application for installation of system to be installed.
   1. Do not proceed with remaining work until workmanship and pattern are approved by Architect or equivalent.

2. Rework Mock-Up area as required to produce acceptable work.

E. Source: Primary roofing products, including shingles, underlayment, and ice and dam protection shall be supplied by a single manufacturer.

1.7 PRE-INSTALLATION MEETINGS

A. General: For all projects in excess of 250 squares of roofing being installed by a ROOFPRO Credentialed installer, a pre-installation meeting is strongly recommended.

B. Timing: The meeting shall take place prior to the start of the roofing installation.

C. Topics: The ROOFPRO Credentialed installer and Owner's representative shall review all pertinent requirements for the project, including but not limited to, scheduling, weather considerations, project duration, product availability, and requirements for the specified warranty.

D. Agenda will include:
1. Installation procedures and manufacturer's recommendations.
2. Safety procedures.
3. Coordination with installation of other work.
4. Availability of roofing materials.
5. Preparation and approval of substrate and penetrations through roof.
6. Other items related to successful execution of work.

1.8 DELIVERY, STORAGE, AND HANDLING

A. All materials shall arrive on site with their original containers or wrappings carrying the manufacturer's seals and labels intact. Store materials at least 100 mm (4 inches) off the ground or roof deck and be contained in the manufacturer's unopened and labeled packaging until they are ready for installation. Packing is to have the manufacture's name, product brand name, and standards pertaining thereof.

B. Store products in a covered, ventilated area.

C. Store bundles on a flat surface. Maximum stacking height shall not exceed manufacturer's recommendations. Store all rolls on end.

1.9 PROJECT CONDITIONS

A. Apply each part of the roofing system only when surfaces are clean and dry.

B. Cover walls and other surfaces in the vicinity of hoisting apparatus (when used) with heavy canvas or other suitable protective material. Any damage caused shall be repaired to match the original materials and appearance at no cost to the Owner.

C. Conduct operations to leave deck exposed for the minimum period of time. Protect the work area as required to prevent water infiltration or environmental damage to building interior.

D. Material shall be neatly stored, elevated, and protected from damage due to wetness or freezing.

E. Maintain all site equipment in good working order.

F. Maintain one copy of manufacturers' application instructions at the Project site.

G. Weather Conditions:
   1. Proceed with work only when existing and forecasted weather conditions will permit work to be performed as recommended by manufacturer.
   2. When application conditions might limit the effectiveness of the sealing strip, such as in cool weather or in areas subject to high winds or blowing dust, shingle adherence shall be ensured through manual sealing.

1.10 SEQUENCING

A. Ensure that products of this section are supplied to affected trades in time to prevent interruption of construction progress.

1.11 WARRANTY SUPPLEMENT

A. In addition to manufacturer's standard warranty the following supplements modify the warranty provisions.

B. Provide manufacturer's supplemental warranty to cover labor and materials in the event of a material defect for the following period after completion of application of shingles:
   1. First 15 Years (Limited Lifetime Warranty) for selected products; First 5 Years for 3-Tab/Strip Shingle products.
   2. Extended Warranty Protection (Installed by an IKO ROOFPRO Credentialed Installer).
   3. Upgraded Wind Warranty from 110 to 130 mph (by complying with all manufacturers' conditions and instructions).
   4. Warranty Transferability Clause: Make available to the Owner, manufacturer's standard supplemental warranty for transferring warranty to a new owner.

PART 2 - PRODUCTS

2.1 MANUFACTURERS

A. Acceptable Manufacturer: IKO
   1. Technical inquiries for Canada 1-888-766-2468 or https://www.iko.com/na/residential-product-concerns-and-technical-inquiries-canada/
   2. Technical inquiries for USA 1-888-456-7663 or https://www.iko.com/na/residential-product-concerns-us/
   3. Web: www.iko.com.

B. Substitutions: Not permitted.

C. Requests for substitutions will be considered in accordance with provisions of Section 01 60 00 - Product Requirements.

2.2 SHINGLES

A. Shingles: Crowne Slate as manufactured by IKO.
   1. Type: Architectural Slate or Tile.
   2. Exposure: 10 inches (254 mm).
   3. IKO Iron Clad Protection Period: 15 years.
   4. Limited 10-Year Algae Resistant Warranty.
   5. Limited wind warranty coverage up to: 110 mph (177 kph).
   6. High Wind warranty upgrade to 130 mph (209 kph) available.
   7. Color: As selected by Architect from manufacturer's color range available in the location of

the Project.

B. Shingles: ArmourShake as manufactured by IKO.
   1. Type: Dimensional.
   2. Exposure: 5-1/2 inches (140 mm).
   3. IKO Iron Clad Protection Period: 15 years.
   4. Limited 10-Year Algae Resistant Warranty.
   5. Limited wind warranty coverage up to: 110 mph (177 kph).
   6. High Wind warranty upgrade to 130 mph (209 kph) available.
   7. ICC ER - 3532 Listed.
   8. Color: As selected by Architect from manufacturer's color range available in the location of the Project.

C. Shingles: Royal Estate as manufactured by IKO.
   1. Type: Architectural
   2. Exposure: 5-5/8 inches (143 mm).
   3. IKO Iron Clad Protection Period: 15 years.
   4. Limited 10-Year Algae Resistant Warranty.
   5. Limited wind warranty coverage up to: 110 mph (177 kph).
   6. High Wind warranty upgrade to 130 mph (209 kph) available.
   7. Color: As selected by Architect from manufacturer's color range available in the location of the Project.

D. Shingles: Cambridge installed in the United States of America as manufactured by IKO.
   1. Type: Architectural
   2. Exposure: 5-7/8 inches (149 mm).
   3. IKO Iron Clad Protection Period: 10 years on SFD/MFD/Commercial Steep Slope.
   4. Limited 10-Year Algae Resistant Warranty.
   5. Limited wind warranty coverage up to: 110 mph (177 kph).
   6. High Wind warranty upgrade to 130 mph (210 kph).
   7. ICC ER - 3532 Listed. (Sumas only).
   8. Color: As selected by Architect from manufacturer's color range available in the location of the Project.

E. Shingles: Cambridge installed in Canada as manufactured by IKO.
   1. Type: Architectural.
   2. Exposure: 5-7/8 inches (149 mm).
   3. IKO Iron Clad Protection Period: 15 years on SFD/MFD/Commercial Steep Slope.
   4. Limited 10-Year Algae Resistant Warranty.
   5. Limited wind warranty coverage up to: 110 mph (177 kph).
   6. High Wind warranty upgrade to 130 mph (210 kph).
   7. ICC ER - 3532 Listed. (Sumas only).
   8. Color: As selected by Architect from manufacturer's color range available in the location of the Project.

F. Shingles: Cambridge Cool Colors as manufactured by IKO.
   1. Type: Architectural
   2. Exposure: 5-7/8 inches (152 mm).
   3. IKO Iron Clad Protection Period: 10 years.
   4. Limited 10-Year Algae Resistant Warranty.
   5. Limited wind warranty coverage up to: 110 mph (177 kph).
   6. High Wind warranty upgrade to 130 mph (209 kph) available.

7. Blue-Green Algae Resistant; Dual Grey Only.
8. CRRC-1 SRI: 16 or greater.
9. CRRC-1 SRI: 20 or greater.
10. Color: As selected by Architect from manufacturer's color range available in the location of the Project.

G. Shingles: Dynasty as manufactured by IKO.
1. Type: Architectural.
2. Exposure: 5-7/8 inches (152 mm).
3. IKO Iron Clad Protection Period: 15 years.
4. Limited 10-Year Algae Resistant Warranty.
5. Limited wind warranty coverage up to: 130 mph (209 kph).
6. Color: As selected by Architect from manufacturer's color range available in the location of the Project.

H. Shingles: Marathon Plus AR as manufactured by IKO.
1. Type: 3-tab.
2. Exposure: 5-5/8 inches (143 mm).
3. IKO Iron Clad Protection Period: 5 years.
4. Limited 5-Year Algae Resistant Warranty. (AR only).
5. Limited wind warranty coverage up to: 60 mph (97 kph).
6. ICC ER - 3532 Listed.(Sumas only)
7. Color: As selected by Architect from manufacturer's color range available in the location of the Project.

I. Shingles: Nordic as manufactured by IKO.
1. Type: Architectural Polymer - Modified Asphalt
2. Exposure: 5-7/8 inches (152 mm).
3. FM Class No. 4473, Class 4.
4. IKO Iron Clad Protection Period: 15 years.
5. Limited 10-Year Algae Resistant Warranty.
6. High Wind warranty up to 130 mph (209 kph) available.
7. Color: As selected by Architect from manufacturer's color range available in the location of the Project.

J. Shingles shall comply with the following performance standards and ratings.
1. Complies with ASTM D3462.
2. Complies with ASTM D3018.
3. Complies with ASTM D3161 (Wind); Class F.
4. Complies with ASTM D7158 (Wind); Class H.
5. Complies with Fire Resistance Rating ASTM E108 (Fire) - Class A.
6. Complies with CSA A123.5.
7. Complies with IRC Wind Code Requirements.
8. Color: As selected by Architect from manufacturer's color range available in the location of the Project.

K. To ensure coverage under the High Wind Application Limited Wind Resistance Warranty; the shingles shall be installed with additional nails, the shingles shall have an opportunity to seal or be manually sealed and starter strip shingles shall be used at all eaves and rakes.

2.3 HIP AND RIDGE SHINGLES

A. Product: Hip and Ridge 12 Ridge Cap Shingles: A high profile self-sealing hip and ridge cap shingle matching the color of selected roof shingle. Each bundle covers approximately 33 lineal feet (10 linear meters).

B. Product: Hip and Ridge Plus: IKO Hip and Ridge Plus Shingles are precut and include pre-tapered headlaps. Each Bundle covers 29.5 linear ft (9 linear meters). Meets ASTM D3161 Class F, ASTM D3462, ASTM E108, and CSA A123.5.

C. Product: Ultra HP High Profile Ridge Cap Shingles: A high profile self-sealing hip and ridge cap shingle matching the color of selected roof shingle. Each bundle covers approximately 20 lineal feet (6.1 linear meters).

D. Product: Ultra HP IR High Profile Ridge Cap Shingles: A high profile self-sealing hip and ridge cap shingle matching the color of selected roof shingle. Each bundle covers approximately 20 lineal feet (6.1 linear meters). Meets UL 2218 Class 4 impact resistance.

E. Product: Marathon Series 3Tab: For use as a field fabricated ridge cap shingle and is to be from shingles matching the color of the selected roof shingle. Each bundle covers approximately 29.5 linear feet (9 linear meters).

2.4 ICE AND WATER PROTECTOR

A. Product: GoldShield: Self-adhering, self-sealing, bituminous sheet with advanced flexibility, slip resistant surface meeting ASTM D1970. Each roll contains approx. 200 sq ft (36 inches x 66.7 feet) (18.6 sq m) (914 mm x 20.3 m). Each roll is backed by a silicone treated release film for easier installation.

B. Product: ArmourGard: Self-adhering, self-sealing, bituminous sheet with advanced flexibility and a slip-resistant surface meeting ASTM D1970. Each roll contains approx. 195 sq ft (36 inches x 65 feet) (18.2 sq m) (914 mm x 19.8 meters). Each roll is backed by a silicone treated release film for easier installation.

C. Product: StormShield: Self-adhering, self-sealing, bituminous sheet surfaced with a sand-fines surface. Each roll contains approx. 195 sq ft (36 inches x 65 feet) (18.1 sq m) (914 mm x 19.8 m). Each roll is backed by a silicone treated release film for easier installation.

2.5 SHINGLE UNDERLAYMENT

A. Product: IKO Stormtite Synthetic Underlayment.

B. Product: RoofGard-Cool Grey Synthetic Underlayment.

C. Product: IKO SBS DeckBase 44. Inorganic, reinforcing mat made of, non-woven glass fibers, heavily coated and impregnated with SBS modified asphalt.
   1. Standards Compliance:
      a. CAN/CSA-A123.16 Asphalt coated base sheet. Type 1.
      b. ASTM D4601, Type 1 specification in all respects
      c. IBC Clause 9.26.5.2.(c).

D. Product: Water repellent, breather type cellulose fiber building paper meeting or exceeding the requirements of ASTM D 226 Type I / CSA 123.3-M, No. 15 Roofing Underlayment.

E. Product: Water repellent breather type sheathing cellulose fiber building paper meeting or exceeding the requirements of ASTM D226 Type II and/or CAN 2-51.32 No. 30 Roofing Underlayment.

F. Product: Type I-No. 8 Underlayment: Water repellent breather type cellulose fiber building paper meeting or exceeding the requirements of ASTM D4869 Type I.

G. Product: Type II-No. 13 Underlayment: Water repellent breather type cellulose fiber building paper meeting or exceeding the requirements of ASTM D4869 Type II.

H. Underlayment Accessories:
   1. Product: EdgeSeal. Double-sided, extra-tacky adhesive creates a super strong bond to seal the drip-edge below to the shingle above to ensure the roof perimeter is securely fastened down.
      a. Standards Compliance: ASTM D1970
      b. Size: 1 Roll: 67.3 ft (20.5 m) x 8.75 inch (222 mm) wide.
   2. Product: GoldSeam. The IKO GoldSeam tape can be applied over plywood or OSB seams as well as to cover gaps near fascia - near the eave.
      a. Standards Compliance: D1970, CSA A123.22-08
      b. Size: 1 Roll: 67.7 ft (20.6 m) x 4.25 inch (108 mm) wide.

2.6 ROOFING CEMENT

A. Product: Asphalt Plastic Roofing Cement meeting the requirements of ASTM D 4586, Type I or II or CAN/CGSB-37.5.

B. Product: Lap Cement meeting the requirements of ASTM D3019, Non-Asbestos-Fibered, Type III or CAN/CGSB-37.4.

C. Product: ASTM D2822, Standard Specification for Asphalt Roof Cement.

2.7 ATTIC VENTILATION

A. Ridge ventilator designed to allow the passage of air out of attics. For use in conjunction with eave/ soffit intake ventilation products. Roof ventilation shall be installed as to meet building codes and as instructed from the architectural drawings.

B. Passive Ventilation (roof louvers or equal), shall be used only as additional exhaust ventilation, or when ridge vents cannot be installed due to architecture. Install in accordance with local building codes. When local codes and application instructions are in conflict, the more stringent requirements shall take precedence.

C. Power Ventilation (power ventilation fans or equal), shall be used only when ridge vents cannot be installed due to architecture. Install in accordance with local building codes. When local codes and application instructions are in conflict, the more stringent requirements shall take precedence.

2.8 NAILS/FASTENERS

A. Product: Standard round wire, zinc-coated steel or aluminum complying with CSB B 111 and meeting local building codes.

B. Product: ASTM F1667 Specification for Driven Fasteners, Nails, Spikes and Staples and meeting local building codes.

2.9 METAL FLASHING

A. Product: Hot-dip galvanized steel sheet, complying with ASTM A653/A653M and meeting local building codes.

B. Product: Copper sheet, complying with ASTM B370 and meeting local building codes

C. Product: Aluminum sheet, complying with ASTM B209 and meeting local building codes.

PART 3 - EXECUTION

3.1 EXAMINATION

A. Do not begin installation until the roof deck has been properly prepared.

B. If roof deck preparation is the responsibility of another installer, notify the architect or building Owner of unsatisfactory preparation before proceeding.

C. The roof deck shall be smooth, firm, dry, and securely nailed. Plywood shall be exterior grade, conforming to building code requirements. 1/2 inch (13 mm) plywood is recommended for best deck performance.

D. The installation of asphalt shingles on dimensional lumber (including shiplap/board decks) is not recommended as it may potentially cause buckling problems. Buckling will not be covered by the Limited Material Warranty.

E. Roof slope shall be 1:3 or steeper. For slopes 1:3 to 1:6, provide special underlayment requirements. Follow the more stringent of the CAN3 A 123.52 Asphalt Shingle Application on Roof Slopes 1:6 to Less than 1:3 instructions or those of the local building code.

F. Never apply asphalt shingles to roof slopes less than 2:12.

G. Reroofing: Split and re-nail curled or buckled shingles, replace any missing shingles, remove loose or protruding nails, and sweep surface clean.

3.2 APPLICATION

A. Follow manufacturer's application instructions in conjunction with manufacturer's reference standards and in accordance with local building codes. When local codes and application instructions are in conflict, the more stringent requirements shall take precedence.

B. Install asphalt shingles on roof slopes in accordance with CAN3 A 123.51-M85 and per manufacture instructions. Follow whichever method is the more stringent.

C. Install ice dam protection underlayment directly on plywood at all eaves and roof edges as well as at all penetrations, abutments, and to vertical walls as instructed. Apply 1-ply of underlayment over the entire deck surface, except where Ice and Water protector membrane has been installed.

3.3 PREPARATION

A. Remove all existing roofing down to the roof deck.

B. Verify that the deck is dry, sound, clean, and smooth. It shall be free of any depressions, waves, and/or projections. Cover with sheet metal, all holes over 25 mm (1 inch) in diameter, cracks

over 12 mm (1/2 inch) in width, loose knots, and excessively resinous areas.

C. Replace damaged deck with new materials.

D. Clean deck surfaces thoroughly prior to installation of Ice and Water protector membranes used for eaves protection and before installation of underlayment.

3.4 PREPARATION

A. Clean deck surfaces thoroughly prior to installation of IKO's Ice and Water protector membranes used for eaves protection and before installation of underlayment.

B. At areas that receive Ice and Water protector membrane, fill knotholes and cracks with latex filler.

C. Install crickets on any chimney wider than 600 mm (24 inches), on the upslope side of all chimneys and penetrations, on all roofs steeper than 6:12, and where required by code.

3.5 PREPARATION

A. Verify that the deck is structurally sound and free of deteriorated decking. All deteriorated decking shall be removed and replaced with new materials.

B. Verify that the existing shingles are dry, sound, clean, and smooth. All curled, buckled, or loose tabs shall be nailed down or removed.

C. Clean deck surfaces thoroughly prior to installation of Ice and Water protector membranes used for eaves protection and before installation of underlayment.

3.6 INSTALLATION OF UNDERLAYMENTS

A. General:
   1. Install using methods recommended and in accordance with local building codes. When local codes and application instructions are in conflict, the more stringent requirements shall take precedence.
   2. Install an ice dam protection underlayment of self-adhesive membrane directly on to the plywood at all eaves and roof edges as well as at all penetrations, abutments, and to vertical walls. Add one ply of underlayment over the entire deck surface, except where Ice and Water protector membrane has been installed.
   3. Install underlayment accessories; EdgeSeal, and GoldSeam as required and in accordance with application instructions.

B. Eaves:
   1. Install eave protection using methods recommended and in accordance with local building codes. When local codes and application instructions are in conflict, the more stringent requirements shall take precedence.
   2. Install eaves edge metal flashing tight with fascia boards; lap joints 51 mm (2 inches) and seal with plastic cement; nail at the top of the flange.
   3. Base flashing shall be in place before shingles are applied. Cap flashings of sheet metal and base flashing of metal or mineral surfaced roofing shall be used at chimneys, skylights, vents, walls and other vertical surfaces and sealed with asphalt plastic cement. Flashing shall conform to the requirements of applicable building codes and good roofing practice.
   4. Overhang eaves with underlayment by a nominal 6 mm (1/4 inch) minimum and extending

up the roof at least 600 mm (24 inches) beyond the interior wall line.

5. In colder climates where required by codes, and on all roofs with slopes between 2:12 and 4:12 (low slopes), install eaves protection using an Ice and Water protector membrane product, up the slope from eaves edge a full 914 mm (36 inches) or to at least 610 mm (24 inches) beyond the interior "warm wall". Lap ends 152 mm (6 inches) and bond.
6. Contractor Option: Use 2 layers of asphalt saturated felt (or equivalent), the first sheet overlapping the eave protection by 480 mm (19 inches), followed by full 914 mm (36 inches) widths overlapping each preceding course by 480 mm (19 inches). For areas where the roof slope is 150 mm per 300 mm down to 100 mm per 300 mm (6 inches per foot down to 4 inches per foot), it is strongly recommended to cover the remainder of the deck with one ply asphalt saturated felt (or equivalent) laid parallel to the eaves, with 51 mm (2 inches) horizontal laps and 104 mm (4 inches) end laps. Apply metal drip edges on top of any underlay along rake edges and directly to the deck along eaves.

C. Valleys:
   1. Install eaves protection at least 914 mm (36 inches) wide and centered on the valley. Lap ends 152 mm (6 inches) and seal.
   2. Where valleys are indicated to be "open valleys", install metal flashing over Ice and Water protector membrane before roof deck underlayment is installed; DO NOT nail through the flashing. Secure the flashing by nailing at 450 mm (18 inches) on center just beyond edge of flashing so that nail heads hold down the edge of the flashing.

D. Roof Deck:
   1. Install one layer of roof deck underlayment over the entire area not protected by Ice and Water protector membrane. Install sheets horizontally so water sheds.
   2. On roofs sloped at more 4:12, lap horizontal edges at least 51 mm (2 inches) and at least 51 mm (2 inches) over eaves protection membrane.
   3. On roofs sloped between 2:12 and 4:12, lap horizontal edges at least 480 mm (19 inches) and at least 480 mm (19 inches) over eaves protection membrane.
   4. Lap ends at least 102 mm (4 inches). Stagger end laps of each layer at least 914 mm (36 inches).
   5. Lap underlayment over valley protection at least 152 mm (6 inches).

E. Penetrations:
   1. Vent pipes: Install a 600 mm (24 inches) square piece of Ice and Water protector membrane lapping over roof deck underlayment; seal tightly to pipe.
   2. Vertical walls: Install Ice and Water protector membrane for eaves protection extending at least 152 mm (6 inches) up the wall and 305 mm (12 inches) on to the roof surface. Lap the Ice and Water protector membrane over the roof deck underlayment. Sheet metal flashing along the slopes of roof shall be stepped with a minimum of 76 mm (3 inches) head lap in both lower flashing and counter flashing. Where roof slopes downward from wall, flashing shall extend over shingles. Where a roof slopes upward from the wall, flashing shall extend up the slope under the shingles to a point equal in height of 400 mm (15-3/4 inches) to the flashing on masonry. Counter flashing shall be embedded approximately 25 mm (1 inch) into the wall with turn back water stop.
   3. Skylights and roof hatches: Install Ice and Water protector membrane from under the built-in counter flashing and 305 mm (12 inches) on to the roof surface, lapping over roof deck underlayment.
   4. Chimneys: Intersection of shingle roofs and masonry walls or chimneys shall be protected using 24 gauge (or better) galvanized sheet metal to extend not less than 152 mm (6 inches) up the wall and 305 mm (12 inches) on to the roof surface. Lap the Ice and Water protector

membrane over the roof deck underlayment.

5. Rake Edges: Install metal edge flashing over the Ice and Water protector membrane and roof deck underlayment; set tight to rake boards; lap joints at least 52 mm (2 inches) and seal with plastic cement; secure with nails.

3.7 INSTALLATION OF SHINGLES

A. General:
   1. Install in accordance with manufacturer's instructions and local building codes in conjunction with reference standards.
   2. When local codes and application instructions are in conflict, the more stringent requirements shall take precedence.
   3. Minimize breakage of shingles in cold weather (below 4 degrees C or 40 degrees F) by avoiding dropping bundles on edge or by "breaking bundles" over the roof ridge or other bundles. Separating shingles carefully, taking extra precautions in colder temperatures.
   4. Handle shingles carefully in hot weather to avoid scuffing the surfacing or damaging the shingle edges.

B. Placement and Nailing:
   1. Use galvanized (zinc coated) roofing nails, 11 or 12 gauge, with at least 10 mm (3/8 inches) diameter heads, long enough to penetrate through plywood or 20 mm (3/4 inches) into boards.
   2. Use 4, 5, or 6 nails per shingle placed in the nail line per manufacturer's instructions and local codes. Placement of nails varies based on the type of shingle specified, roof slope, and other environmental considerations. Consult the manufacturer's application instructions for the specified shingle for details.
   3. Drive nails straight so that nail head is flush with, but not cutting into shingle surface. Do not overdrive or under drive the nails.
   4. Shingle offset varies based on the type of shingle specified. Consult the application instructions for the specified shingle for details.

C. Placement and Nailing:
   1. Beginning with the starter strip, trim shingles so that they "nest" within the shingle located beneath it. This procedure will yield a first course that is typically 76 mm to 102 mm (3 inches to 4 inches) wide rather than a fully exposed shingle.
   2. Laterally, offset the new shingles from the existing keyways, to avoid waves or depressions caused by excessive dips in the roofing materials.
   3. Using the bottom of the tab on existing shingles, align subsequent courses.
   4. Secure with 4, 5, or 6 nails per shingle placed in the nail line per manufacturer's instructions and local codes. Placement of nails varies based on the type of shingle specified, roof slope, and other environmental considerations. Consult the manufacturer's application instructions for the specified shingle for details.
   5. Nails shall be driven flush with the shingle surface. Do not overdrive or underdrive the nails.
   6. Shingle offset varies based on the type of shingle specified. Consult the application instructions for the specified shingle for details

D. Nailing on Steep Slopes/High Wind Areas:
   1. For high wind areas, or on slopes of 21:12 (60 degree) or more, use more nails per shingle (consult specific shingle instructions and building code for exact quantity). Ensure that no nail is within 50 mm (2 inches) of a joint/cutout of the underlying shingle.
   2. Seal down each shingle at time of application with three 25 mm (1 inch) diameter (approx.

size and thickness of a quarter) spots of asphalt plastic cement placed under the shingle 51 mm (2 inches) above the bottom edge and equally spaced along the shingle. Apply plastic cement in moderation since excessive amounts may cause blistering. CAUTION: Shingles shall seal to the underlying course when the factory applied asphalt sealant is sufficiently warmed by the heat of direct sunlight.

3. When application conditions might limit the effectiveness of the sealing strip, such as in cool weather or in areas subject to high winds or blowing dust, shingle adherence shall be ensured through manual sealing as described above.

E. Valleys:
   1. Install valleys using the "open metal valley" method:
      a. Snap diverging chalk lines on the metal flashing, starting at 76 mm (3 inches) each side of top of valley, spreading at 3 mm per 300 mm (1/8 inch per foot) to the eaves.
      b. Run shingles to chalk line.
      c. Trim last shingle in each course to match the chalk line; do not trim shingles to less than 300 mm (12 inches) wide.
      d. Cut a 50 mm (2 inches) triangle off the top corner to direct water into the valley and embed the valley end of each shingle into a 75 mm (3 inches) band of asphalt plastic cement.
      e. Apply a 50 mm (2 inches) wide strip of plastic cement under ends of shingles, sealing them to the metal flashing.

F. Penetrations
   1. All penetrations are to be flashed according to Asphalt Roofing Manufacturers Association (ARMA), Canadian Asphalt Shingle Manufacturers' Association (CASMA), Canadian Roofing Contractors Association (CRCA), and/or National Roofing Contractors Association (NRCA) guidelines to meet local building codes.

3.8 VENTILATION

A. General:
   1. Ventilation shall meet or exceed current F.H.A., H.U.D. and local code requirements.

B. Ridge / Soffit Ventilation:
   1. Cut continuous vent slots through the sheathing, stopping 152 mm (6 inches) from each end of the ridge.
   2. On roofs without a ridge board, make a slot 51 mm (2 inches) wide, centered on the ridge.
   3. On roofs with a ridge board, make two slots 45 mm (1-3/4 inches) wide, one on each side.
   4. Install ridge vent material along the full length of the ridge, including uncut areas.
   5. Butt ends of ridge vent material and join using roofing cement.
   6. Install eaves vents in sufficient quantity to equal or exceed the ridge vent area.

3.9 PROTECTION

A. Protect installed products from foot traffic until completion of the project.

B. Any roof areas that are not completed by the end of the workday are to be protected from moisture and contaminants.

END OF SECTION

SECTION 07 62 00

SHEET METAL FLASHING, TRIM AND PREFABRICATED ROOF SPECIALTIES

PART 1 GENERAL

1.1 WORK INCLUDED

A. Flashings and counter-flashings.

B. Sheet metal roofing and fabricated sheet metal items.

C. Metal coping and cap flashing systems.

D. Other fabricated sheet metal items required to keep building weathertight and not specified elsewhere.

1.2 RELATED WORK

A. Section 07 31 13 - Asphalt Shingle Roofing Systems

B. Section 07 90 00 - Joint Protection

1.3 REFERENCES

A. ASTM B370 - Copper Sheet and Strip for Building Construction.

B. CDA (Copper Development Association) - Contemporary Copper, A Handbook of Sheet Copper Fundamentals, Design, Details and Specifications.

C. FS SS-C-153 - Cement, Bituminous, Plastic.

D. SMACNA - Architectural Sheet Metal Manual.

1.4 SYSTEM DESCRIPTION

A. Work of this Section is to physically protect wall system from damage that would permit water leakage to building interior.

1.5 QUALITY ASSURANCE

A. Applicator: Company specializing in sheet metal flashing work with 5 years minimum experience.

1.6 SUBMITTALS

A. Submit shop drawings and product data.

B. Describe material profile, jointing pattern, jointing details, fastening methods, and installation details.

C. Provide product data on shape of components, materials and finishes, anchor types and locations.

1.7 STORAGE AND HANDLING

A. Store products per manufacturer's recommendations.

B. Stack preformed and prefinished material to prevent twisting, bending, or abrasion, and to provide ventilation.

C. Prevent contact with materials during storage which may cause discoloration, staining, or damage.

PART 2 PRODUCTS

2.1 SHEET MATERIALS

A. Copper fabric flashing soft temper; 5 oz/sq ft bonded to and between two layers of asphalt impregnated cotton fabric by means of an asphalt mastic.

B. Galvanized Steel: Structural steel sheet, coating zinc G90. Comply with ASTM A653/A653M. Thickness: 0.019 inch.

C. Prefinished Galvanized Steel Sheet: Structural steel sheet, type thick core, with zinc coating; G90. Comply with ASTM A755/A755M. Thickness: 0.019 inch. Coating: Shop precoated with polyester or two-coat fluoropolymer, color by Owner.

D. Aluminum Sheet: Alloy and temper as required for application and finish. Comply with ASTM B209/B209M. Thickness: 0.032 inch. Finish: Anodized, color by Owner.

E. Stainless Steel: Type 304 or 316 dead soft fully annealed. Comply with ASTM A240/A240M. Thickness: 0.018 inch. Surface: smooth finish: 2B.

F. Zinc-Tin (Terne) – Coated Steel Sheet: Single-reduced black plate with 0.079-mil thick 50/50 zinc-tin alloy coating on both sides of core metal. Comply with ASTM A625/A625M. Coating: Factory prime painted. Thickness: 0.015 inch.

2.2 ACCESSORIES

A. Fasteners: Galvanized steel, aluminum, stainless steel, or same material and finish as flashing metal.

B. Sealant: As specified in Section 07 90 00 - Joint Sealers.

C. Flashing Cement: FS SS-C-153, Type I-asphaltic base cement.

D. Plastic Cement: Comply with ASTM D4586/D4586M, Type I.

E. Solder: Type suitable for application and material being soldered. Comply with ASTM B32. Used with noncorrosive flux.

2.3 FABRICATION

A. Form sections true to shape, accurate in size, square, and free from distortion or defects.

B. Form pieces in longest practical lengths.

PART 3 EXECUTION

3.1 INSPECTION

A. Beginning of installation means acceptance of existing conditions.

3.2 INSTALLATION

A. Conform to drawing details for cavity wall included in SMACNA manual.

B. On horizontal surfaces flashing to be laid either in a fresh bed of mortar above and below or a trowel coat of mastic. Vertical surfaces shall be spotted with asphalt mastic to hold flashing in place.

C. Joints: The material shall be lapped at least 4 inches and cemented with an asphalt mastic.

END OF SECTION

SECTION 07 90 00

JOINT PROTECTION

PART 1 - GENERAL

1.1 RELATED DOCUMENTS

A. Drawings and general provisions of the Contract, including General and Supplementary Conditions and Division 01 Specification Sections, apply to this Section.

1.2 SUMMARY

A. Section Includes:

1. Silicone joint sealants.
2. Nonstaining silicone joint sealants.
3. Urethane joint sealants.
4. Mildew-resistant joint sealants.
5. Polysulfide joint sealants. Butyl joint sealants.
6. Acoustical joint sealants.

1.3 PREINSTALLATION MEETINGS

A. Preinstallation Conference: Conduct conference at Project site.

1.4 ACTION SUBMITTALS

A. Product Data: For each joint-sealant product.

B. Samples for Initial Selection: Manufacturer's color charts consisting of strips of cured sealants showing the full range of colors available for each product exposed to view.

C. Samples for Verification: For each kind and color of joint sealant required, provide Samples with joint sealants in 1/2-inch-wide joints formed between two 6-inch-long strips of material matching the appearance of exposed surfaces adjacent to joint sealants.

D. Joint-Sealant Schedule: Include the following information:

1. Joint-sealant application, joint location, and designation.
2. Joint-sealant manufacturer and product name.
3. Joint-sealant formulation.
4. Joint-sealant color.

1.5 INFORMATIONAL SUBMITTALS

A. Product Test Reports: For each kind of joint sealant, for tests performed by manufacturer and witnessed by a qualified testing agency.

B. Sample Warranties: For special warranties.

1.6 QUALITY ASSURANCE

A. Installer Qualifications: An authorized representative who is trained and approved by the manufacturer.

B. Product Testing: Test joint sealants using a qualified testing agency.

1. Testing Agency Qualifications: Qualified according to ASTM C 1021 to conduct the testing indicated.

1.7 FIELD CONDITIONS

A. Do not proceed with installation of joint sealants under the following conditions:

1. When ambient and substrate temperature conditions are outside limits permitted by joint- sealant manufacturer or are below 40 deg F.
2. When joint substrates are wet.
3. Where joint widths are less than those allowed by joint-sealant manufacturer for applications indicated.
4. Where contaminants capable of interfering with adhesion have not yet been removed from joint substrates.

1.8 WARRANTY

A. Special Installer's Warranty: Installer agrees to repair or replace joint sealants that do not comply with performance and other requirements specified in this Section within specified warranty period.

1. Warranty Period: Two years from date of Substantial Completion.

B. Special Manufacturer's Warranty: Manufacturer agrees to furnish joint sealants to repair or replace those joint sealants that do not comply with performance and other requirements specified in this Section within specified warranty period.

1. Warranty Period: Five years from date of Substantial Completion.

C. Special warranties specified in this article exclude deterioration or failure of joint sealants from the following:

1. Movement of the structure caused by stresses on the sealant exceeding sealant manufacturer's written specifications for sealant elongation and compression.
2. Disintegration of joint substrates from causes exceeding design specifications.
3. Mechanical damage caused by individuals, tools, or other outside agents.
4. Changes in sealant appearance caused by accumulation of dirt or other atmospheric contaminants.

PART 2 - PRODUCTS

2.1 JOINT SEALANTS, GENERAL

A. Compatibility: Provide joint sealants, backings, and other related materials that are compatible with one another and with joint substrates under conditions of service and application, as demonstrated by joint-sealant manufacturer, based on testing and field experience.

B. VOC Content of Interior Sealants: Sealants and sealant primers used inside the weatherproofing system shall comply with the following:

1. Architectural sealants shall have a VOC content of 250 g/L or less.
2. Sealants and sealant primers for nonporous substrates shall have a VOC content of 250 g/L or less.

C. Low-Emitting Interior Sealants: Sealants and sealant primers shall comply with the testing and product requirements of the California Department of Health's (formerly, the California Department of Health Services') "Standard Method for the Testing and Evaluation of Volatile Organic Chemical Emissions from Indoor Sources Using Environmental Chambers."

D. Colors of Exposed Joint Sealants: As selected by Architect from manufacturer's full range.

2.2 SILICONE JOINT SEALANTS

A. Silicone, S, NS, 100/50, NT: Single-component, nonsag, plus 100 percent and minus 50 percent movement capability, nontraffic-use, neutral-curing silicone joint sealant; ASTM C 920, Type S, Grade NS, Class 100/50, Use NT.

2.3 NONSTAINING SILICONE JOINT SEALANTS

A. Nonstaining Joint Sealants: No staining of substrates when tested according to ASTM C 1248.

B. Silicone, Nonstaining, S, NS, 100/50, NT: Nonstaining, single-component, nonsag, plus 100 percent and minus 50 percent movement capability, nontraffic-use, neutral-curing silicone joint sealant; ASTM C 920, Type S, Grade NS, Class 100/50, Use NT.

2.4 URETHANE JOINT SEALANTS

A. Urethane, M, NS, 50, T, NT: Multicomponent, nonsag, plus 50 percent and minus 50 percent movement capability, traffic- and nontraffic-use, urethane joint sealant; ASTM C 920, Type M, Grade NS, Class 50, Uses T and NT.

2.5 MILDEW-RESISTANT JOINT SEALANTS

A. Mildew-Resistant Joint Sealants: Formulated for prolonged exposure to humidity with fungicide to prevent mold and mildew growth.

B. STPE, Mildew Resistant, S, NS, 50, NT: Mildew-resistant, single-component, nonsag, plus 50 percent and minus 50 percent movement capability, nontraffic-use, silyl-terminated polyether joint sealant; ASTM C 920, Type S, Grade NS, Class 50, Use NT.

2.6 BUTYL JOINT SEALANTS

A. Butyl-Rubber-Based Joint Sealants: ASTM C 1311.

2.7 LATEX JOINT SEALANTS

A. Acrylic Latex: Acrylic latex or siliconized acrylic latex, ASTM C 834, Type OP, Grade NF.

2.8 ACOUSTICAL JOINT SEALANTS

A. Acoustical Joint Sealant: Manufacturer's standard nonsag, paintable, nonstaining latex sealant complying with ASTM C 834. Product effectively reduces airborne sound transmission through perimeter joints and openings in building construction as demonstrated by testing representative assemblies according to ASTM E 90.

1. Products: Subject to compliance with requirements, provide the following:
   a. Pecora Corporation; AC-20 FTR or AIS-919.
   b. USG Corporation; SHEETROCK Acoustical Sealant.

2.9 JOINT-SEALANT BACKING

A. Sealant Backing Material, General: Nonstaining; compatible with joint substrates, sealants, primers, and other joint fillers; and approved for applications indicated by sealant manufacturer based on field experience and laboratory testing.

B. Cylindrical Sealant Backings: ASTM C 1330, Type C (closed-cell material with a surface skin) and of size and density to control sealant depth and otherwise contribute to producing optimum sealant performance.

C. Bond-Breaker Tape: Polyethylene tape or other plastic tape recommended by sealant manufacturer for preventing sealant from adhering to rigid, inflexible joint-filler materials or joint surfaces at back of joint. Provide self-adhesive tape where applicable.

2.10 MISCELLANEOUS MATERIALS

A. Primer: Material recommended by joint-sealant manufacturer where required for adhesion of sealant to joint substrates indicated, as determined from preconstruction joint-sealant-substrate tests and field tests.

B. Cleaners for Nonporous Surfaces: Chemical cleaners acceptable to manufacturers of sealants and sealant backing materials, free of oily residues or other substances capable of staining or harming joint substrates and adjacent nonporous surfaces in any way, and formulated to promote optimum adhesion of sealants to joint substrates.

C. Masking Tape: Nonstaining, nonabsorbent material compatible with joint sealants and surfaces adjacent to joints.

PART 3 - EXECUTION

3.1 EXAMINATION

A. Examine joints indicated to receive joint sealants, with Installer present, for compliance with requirements for joint configuration, installation tolerances, and other conditions affecting performance of the Work.

B. Proceed with installation only after unsatisfactory conditions have been corrected.

3.2 PREPARATION

A. Surface Cleaning of Joints: Clean out joints immediately before installing joint sealants to comply with joint-sealant manufacturer's written instructions and the following requirements:

1. Remove all foreign material from joint substrates that could interfere with adhesion of joint sealant, including dust, paints (except for permanent, protective coatings tested and approved for sealant adhesion and compatibility by sealant manufacturer), old joint sealants, oil, grease, waterproofing, water repellents, water, surface dirt, and frost.
2. Clean porous joint substrate surfaces by brushing, grinding, mechanical abrading, or a combination of these methods to produce a clean, sound substrate capable of developing optimum bond with joint sealants. Remove loose particles remaining after cleaning operations above by vacuuming or blowing out joints with oil-free compressed air. Porous joint substrates include the following:
    a. Concrete.
    b. Masonry.
3. Remove laitance and form-release agents from concrete.
4. Clean nonporous joint substrate surfaces with chemical cleaners or other means that do not stain, harm substrates, or leave residues capable of interfering with adhesion of joint sealants. Nonporous joint substrates include the following:
    a. Metal.
    b. Glass.
    c. Glazed surfaces of ceramic tile.

B. Joint Priming: Prime joint substrates where recommended by joint-sealant manufacturer or as indicated by preconstruction joint-sealant-substrate tests or prior experience. Apply primer to comply with joint-sealant manufacturer's written instructions. Confine primers to areas of joint- sealant bond; do not allow spillage or migration onto adjoining surfaces.

C. Masking Tape: Use masking tape where required to prevent contact of sealant or primer with adjoining surfaces that otherwise would be permanently stained or damaged by such contact or by cleaning methods required to remove sealant smears.

Remove tape immediately after tooling without disturbing joint seal.

3.3 INSTALLATION OF JOINT SEALANTS

A. General: Comply with joint-sealant manufacturer's written installation instructions for products and applications indicated, unless more stringent requirements apply.

B. Sealant Installation Standard: Comply with recommendations in ASTM C 1193 for use of joint sealants as applicable to materials, applications, and conditions indicated.

C. Install sealant backings of kind indicated to support sealants during application and at position required to produce cross-sectional shapes and depths of installed sealants relative to joint widths that allow optimum sealant movement capability.

1. Do not leave gaps between ends of sealant backings.
2. Do not stretch, twist, puncture, or tear sealant backings.
3. Remove absorbent sealant backings that have become wet before sealant application and replace them with dry materials.

D. Install bond-breaker tape behind sealants where sealant backings are not used between sealants and backs of joints.

E. Install sealants using proven techniques that comply with the following and at the same time backings are installed:

1. Place sealants so they directly contact and fully wet joint substrates.
2. Completely fill recesses in each joint configuration.
3. Produce uniform, cross-sectional shapes and depths relative to joint widths that allow optimum sealant movement capability.

F. Tooling of Nonsag Sealants: Immediately after sealant application and before skinning or curing begins, tool sealants according to requirements specified in subparagraphs below to form smooth, uniform beads of configuration indicated; to eliminate air pockets; and to ensure contact and adhesion of sealant with sides of joint.

1. Remove excess sealant from surfaces adjacent to joints.
2. Use tooling agents that are approved in writing by sealant manufacturer and that do not discolor sealants or adjacent surfaces.
3. Provide concave joint profile per Figure 8A in ASTM C 1193 unless otherwise indicated.

G. Acoustical Sealant Installation: At sound-rated assemblies and elsewhere as indicated, seal construction at perimeters, behind control joints, and at openings and penetrations with a continuous bead of acoustical sealant. Install acoustical sealant at both faces of partitions at perimeters and through penetrations. Comply with ASTM C 919 and with manufacturer’s written recommendations.

3.4 CLEANING

A. Clean off excess sealant or sealant smears adjacent to joints as the Work progresses by methods and with cleaning materials approved in writing by manufacturers of joint sealants and of products in which joints occur.

3.5 PROTECTION

A. Protect joint sealants during and after curing period from contact with contaminating substances and from damage resulting from construction operations or other causes so sealants are without deterioration or damage at time of Substantial Completion. If, despite such protection, damage or deterioration occurs, cut out, remove, and repair damaged or deteriorated joint sealants immediately so installations with repaired areas are indistinguishable from original work.

3.6 JOINT-SEALANT SCHEDULE

A. Joint-Sealant Application: Exterior joints in vertical surfaces and horizontal nontraffic surfaces.

1. Joint Locations:
   a. Construction joints in cast-in-place concrete.
   b. Joints between different materials listed above.
   c. Other joints as indicated on Drawings.
2. Joint Sealant: Urethane, M, NS, 50, T, NT
3. Joint-Sealant Color: As selected by Architect from manufacturer's full range of colors.

END OF SECTION

SECTION 09 90 00

PAINTING AND FINISHES

1. PART 1 GENERAL

1.1 WORK INCLUDED

A. Surface preparation.

B. Surface finish schedule.

C. Color selection schedule.

D. Applying finishes to existing structures and equipment as specified.

1.2 RELATED WORK

A. Section 051200 - Structural Steel Framing.

B. Section 061000 - Rough Carpentry.

1.3 REFERENCES

A. ANSI/ASTM D16 - Definitions of Terms Relating to Paint, Varnish, Laquer, and Related Products.

B. ASTM D2016 - Test Method for Moisture Content of Wood.

C. ASTM D4263 - Standard Test Method for indicating moisture in concrete by the plastic sheet method.

1.4 DEFINITIONS

A. Conform to ANSI/ASTM D16 for interpretation of terms used in this Section.

1.5 QUALITY ASSURANCE

A. Product Manufacturer: Company specializing in manufacturing quality paint and finish products with three years experience.

B. Applicator: Company specializing in commercial painting and finishing approved by product manufacturer.

1.6 REGULATORY REQUIREMENTS

A. Conform to applicable code for flame/fuel/smoke rating requirements for finishes.

1.7 SUBMITTALS

A. Submit product data under provisions of Section 013300.

B. Provide product data on all finishing products.

C. Submit samples and color charts under provisions of Section 013300.

D. Submit manufacturer's application instructions under provisions of Section 013300.

1.8 DELIVERY, STORAGE, AND HANDLING

A. Deliver products to site under provisions of Section 016000.

B. Store and protect products under the provisions of Section 016000.

C. Deliver products to site in sealed and labelled containers; inspect to verify acceptance.

D. Container labelling to include manufacturer's name, type of paint, brand name, brand code, coverage, surface preparation, drying time, cleanup, color designation, and instructions for mixing and reducing.

E. Store paint materials at minimum ambient temperature of 45 degrees F and a maximum of 90 degrees F, in well ventilated area, unless required otherwise by manufacturer's instructions.

F. Take precautionary measures to prevent fire hazards and spontaneous combustion.

1.9 ENVIRONMENTAL REQUIREMENTS

A. Provide continuous ventilation and heating facilities to maintain surface and ambient temperatures above 45 degrees F for 24 hours before, during, and 72 hours after application of finishes, unless required otherwise by manufacturer's instructions.

B. Do not apply exterior coatings during rain or snow, or when relative humidity is above 50 percent, unless required otherwise by manufacturer's instructions.

C. Minimum Application Temperatures for Latex Paints: 45 degrees F for interiors; 50 degrees F for exterior; unless required otherwise by manufacturer's instructions.

1.10 EXTRA STOCK

A. Provide a one gallon container of each color and type to Owner. Quart containers will be acceptable for touchup paint and for small items.

2. PART 2 PRODUCTS

2.1 ACCEPTABLE MANUFACTURERS - PAINT, PRIMERS, BLOCK FILLER, AND FIELD CATALYZED COATINGS

A. Coronado Paint Company

B. Glidden Division I.C.I.

C. Sherwin Williams.

D. Substitutions: Under provisions of Section 016000.

2.2 MATERIALS

A. Coatings: Ready mixed, except field catalyzed coatings. Process pigments to a soft paste consistency, capable of being readily and uniformly dispersed to a homogeneous coating.

B. Coatings: Good flow and brushing properties; capable of drying or curing free of streaks or sags.

C. Accessory Materials: Linseed oil, shellac, turpentine, paint thinners and other materials not specifically indicated but required to achieve the finishes specified, of commercial quality.

2.3 FINISHES

A. Refer to schedule at end of Section for surface finish and color schedule.

3. PART 3 EXECUTION

3.1 INSPECTION

A. Verify that surfaces are ready to receive work as instructed by the product manufacturer.

B. Examine surfaces scheduled to be finished prior to commencement of work. Report any condition that may potentially affect proper application.

C. Measure moisture content of surfaces using an electronic moisture meter. Do not apply finishes unless moisture content of surfaces is below the following maximums:

1. Plaster and Gypsum Wallboard: 12 percent.
2. Masonry, Concrete, and Concrete Unit Masonry: 12 percent.
3. Interior Located Wood: 15 percent, measured in accordance with ASTM D2016.
4. Exterior Located Wood: 15 percent, measured in accordance with ASTM D2016.

5. Concrete Floors: 14 percent, measured in accordance with ASTM D4263.

D. Beginning of installation means acceptance of existing surfaces.

3.2 PREPARATION

A. Remove electrical plates, hardware, light fixture trim, and fittings prior to preparing surfaces or finishing.

B. Correct minor defects and clean surfaces which affect work of this Section.

C. Seal marks which may bleed through surface finishes.

D. Impervious Surfaces: Remove mildew by scrubbing with solution of tri-sodium phosphate and bleach. Rinse with clean water and allow surface to dry.

E. Concrete Floors: Remove contamination, acid etch, and rinse floors with clear water. Verify required acid-alkali balance is achieved by using a pH pencil or pH range paper, pH should be 11 or less prior to application of coatings.

F. Interior Wood Items Scheduled to Receive Finish: Wipe off dust and grit prior to priming. Seal knots, pitch streaks, and sappy sections with sealer. Fill nail holes and cracks after primer has dried; sand between coats.

G. Exterior Wood Scheduled to Receive Paint Finish: Remove dust, grit, and foreign matter. Seal knots, pitch streaks, and sappy sections. Fill nail holes with tinted exterior caulking compound after prime coat has been applied.

H. Uncoated Steel and Iron Surfaces: Remove grease, scale, dirt, and rust. Where heavy coatings of scale are evident, remove by wire brushing or sandblasting; clean by washing with solvent. Apply a treatment of phosphoric acid solution, ensuring welded joints, bolts, and nuts are similarly cleaned. Spot prime paint after repairs.

I. Shop Primed Steel Surfaces: Sand and scrape to remove loose primer and rust. Feather edges to make touch-up patches inconspicuous. Clean surfaces with solvent. Prime bare steel surfaces.

3.3 PROTECTION

A. Protect elements surrounding the work of this Section from damage or disfiguration.

B. Repair damage to other surfaces caused by work of this Section.

C. Furnish drop cloths, shields, and protective methods to prevent spray or droppings from disfiguring other surfaces.

D. Remove empty paint containers from site.

3.4 APPLICATION

A. Apply products in accordance with manufacturer's instructions.

B. Do not apply finishes to surfaces that are not dry.

C. Apply each coat to the uniform finish.

D. Sand lightly between coats to achieve the required finish.

E. Allow the applied coat to dry before the next coat is applied.

F. Prime back surfaces of interior and exterior woodwork with primer paint.

3.5 CLEANING

A. As Work proceeds, promptly remove paint where spilled, splashed, or spattered.

B. During progress of Work maintain premises free of unnecessary accumulation of tools, equipment, surplus materials, and debris.

C. Collect cotton waste, cloths, and material which may constitute a fire hazard, place it in closed metal containers, and remove daily from site.

3.6 GENERAL FINISH SPECIFICATIONS

A. Ferrous Metals (F.M.)

1. F.M.-1 Exterior

Surface:
Preparation: SSPC SP6 Commercial Blast Cleaning.

Primer: Apply one coat of 54% volume solids, two component polyamide cured high build epoxy primer. Ata dry film thickness of 3.0 mils and a coverage of 289 square feet per gallon.

Finish Coat: Apply two coats of a 54% volume solids aliphatic polyester polyurethane enamel. At a minimum dry film thickness of 2.0 mils each and a coverage of 577 square feet per gallon. Color by Owner.

B. Wood (W.)

1. W-1 Stain

Surface:
Preparation: Surface must be dry, clean, and free of contaminants. Sand rough areas.

Finish Coat: Apply two coats of Vermont Natural Coatings PolyWhey Exterior Penetrating Wood Stain. Color by Owner.

C. Wood (W.)

1. W-2 Paint

Surface Preparation:	Surface must be dry, clean, and free of contaminants. Sand rough areas.
Primer:	Apply a 53% volume solids alkyd wood primer at a dry film thickness of 2.0 mils and a coverage of 425 square feet per gallon.
Finish Coats:	Apply two coats of a 54% volume solids alkyd enamel, at a dry film thickness of 2.0 mils per coat and a coverage of 400 square feet per gallon. Color by Owner.

3.7 PAINTS AND COATINGS SCHEDULE

A. Application: Materials shall be applied to the following surfaces and areas in accordance with the guidelines developed within the "General Finish Specifications".

B. Finish FM-1: Ferrous materials including, but not limited to, structural steel, and miscellaneous metals.

C. Finish W-1: Existing and proposed as shown on drawings.

D. Finish W-2: Existing and proposed as shown on drawings.

END OF SECTION

SECTION 31 23 23

FILL

PART 1 - GENERAL

1.1 SUMMARY

A. Section Includes:

1. Fill under slabs-on-grade.
2. Fill for over-excavation.
3. Consolidation and Compaction.

B. Related Sections:

1. Section 03 30 00 - Cast-in-Place Concrete.

1.2 REFERENCES

A. American Association of State Highway and Transportation Officials:

1. AASHTO T180 - Standard Specification for Moisture-Density Relations of Soils Using a 4.54-kg (10-lb) Rammer and a 457-mm (18-in.) Drop.

B. ASTM International:

1. ASTM D698 - Standard Test Method for Laboratory Compaction Characteristics of Soil Using Standard Effort (12,400 ft-lbf/ft3 (600 kN-m/m3)).
2. ASTM D1556 - Standard Test Method for Density and Unit Weight of Soil in Place by the Sand-Cone Method.
3. ASTM D1557 - Standard Test Methods for Laboratory Compaction Characteristics of Soil Using Modified Effort (56,000 ft-lbf/ft3 (2,700 kN-m/m3)).
4. ASTM D2167 - Standard Test Method for Density and Unit Weight of Soil in Place by the Rubber Balloon Method.
5. ASTM D2922 - Standard Test Method for Density of Soil and Soil-Aggregate in Place by Nuclear Methods (Shallow Depth).
6. ASTM D3017 - Standard Test Method for Water Content of Soil and Rock in Place by Nuclear Methods (Shallow Depth).

C. Michigan Department of Transportation (MDOT)

1. MDOT Standard Specification for Construction, current edition.
2. MDOT Density Control Handbook, current edition.

D. ANSI/ASTM

1. ANSI/ASTM C136 or MTM 108 & 109 - Method for Sieve Analysis of Fine and Coarse Aggregates.
2. ANSI/ASTM C117 or MTM 108 - Test method for materials finer than 15mm (No. 200 Sieve) in mineral aggregates by washing.

1.3 SUBMITTALS

A. Product Data: Submit data for geotextile fabric indicating fabric and construction.

B. Samples: Submit, in air-tight containers, 10 lb. sample of each type of fill to testing laboratory.

C. Materials Source: Submit name of imported fill materials suppliers.

D. Manufacturer's Certificate: Certify Products meet or exceed specified requirements.

1.4 QUALITY ASSURANCE

A. Perform Work in accordance with MDOT Standard Specifications for Construction, current edition.

PART 2 - PRODUCTS

2.1 FILL MATERIALS

A. Type B - Granular Fill and Subbase: MDOT Class II - for fill under slabs on grade. Compacted to a minimum of 95 percent of the materials maximum dry density as determined by Michigan one-point cone method in layers not to exceed 12 inches loose depth.

2.2 ACCESSORIES

A. Filter Fabric: Not used.

PART 3 - EXECUTION

3.1 EXAMINATION

A. Section 01 30 00 - Administrative Requirements: Coordination and Project conditions.

B. Verify structural ability of unsupported walls to support loads imposed by fill.

C. Verify that all fill materials to be used are acceptable.

3.2 PREPARATION

A. Compact subgrade to density requirements for subsequent backfill materials.

B. Cut out soft areas of subgrade not capable of compaction in place. Backfill with structural fill and compact to density equal to or greater than requirements for subsequent fill material.
   1. In areas that are suspect and may require subgrade undercutting, notify Engineer immediately. Do not proceed until it is agreed subgrade undercutting is required and quantities can be documented. See Section 31 23 16 - Excavation.

C. Scarify subgrade surface to depth of 6 inch.

D. Proof roll to identify soft spots; fill and compact to density equal to or greater than requirements for subsequent fill material.

3.3 BACKFILLING

A. Backfill areas to contours and elevations with unfrozen materials.

B. Systematically backfill to allow maximum time for natural settlement. Do not backfill over porous, wet, frozen, or spongy subgrade surfaces.

C. Place material in continuous layers as follows:
1. Subsoil Fill: Maximum 12 inches compacted depth.
2. Structural Fill: Maximum 8 inches compacted depth.
3. Granular Fill: Maximum 8 inches compacted depth.

D. Employ placement method that does not disturb or damage other Work or foundation perimeter drainage conduit in trenches.

E. Maintain optimum moisture content of backfill materials to attain required compaction density.

F. Backfill against supported foundation walls. Do not backfill against unsupported foundation walls.

G. Remove surplus backfill materials from site.

H. Leave fill material stockpile areas free of excess fill materials.

I. Type B – Granular Fill: Place and compact materials as specified in Part 2 of this Section.

3.4 TOLERANCES

A. Section 01 40 00 - Quality Requirements: Tolerances.

B. Top Surface of Backfilling Within Building Areas: Plus or minus 1 inch from required elevations.

C. Top Surface of Backfilling Under Paved Areas: Plus or minus 0.10-foot, inch from required elevations.

D. Top Surface of General Backfilling: Plus or minus 1 inch from required elevations.

3.5 FIELD QUALITY CONTROL

A. Section 01 70 00 - Execution and Closeout Requirements: Field inspecting, testing, adjusting, and balancing.

B. Perform in place compaction tests in accordance with the following:
1. Density Tests: ASTM D1556 or ASTM D2922.
2. Moisture Tests: ASTM D3017.

C. When tests indicate Work does not meet specified requirements, remove Work, replace and retest at no cost to Owner.

D. Tests and analysis of fill material will be performed in accordance with One Point Michigan Cone Test.

E. Compaction testing will be performed in accordance with MDOT standard requirements.

F. Frequency of tests: At the discretion of the Engineer.

G. Proof roll compacted fill surfaces under slabs-on-grade.

3.6 PROTECTION OF FINISHED WORK

A. Section 01 70 00 - Execution and Closeout Requirements: Protecting finished Work.

END OF SECTION

SECTION 32 92 19

SEEDING

PART 1 GENERAL

1.1 SUMMARY

A. Section Includes:

1. Fertilizing.
2. Seeding.
3. Hydroseeding.
4. Mulching.
5. Maintenance.

B. Related Requirements:

1. Sections as part of the Pavilion Work.

1.2 REFERENCES

A. ASTM International:

1. ASTM C602 - Standard Specification for Agricultural Liming Materials.

B. FS 0-F-241 – Fertilizers, Mixed, Commercial.

1.3 DEFINITIONS

A. Weeds: Include Dandelion, Jimsonweed, Quackgrass, Horsetail, Morning Glory, Rush Grass, Mustard, Lambsquarter, Chickweed, Cress, Crabgrass, Canadian Thistle, Nutgrass, Poison Oak, Blackberry, Tansy Ragwort, Bermuda Grass, Johnson Grass, Poison Ivy, Nut Sedge, Nimble Will, Bindweed, Bent Grass, Wild Garlic, Perennial Sorrel, and Brome Grass.

1.4 PROTECTION

A. Protect landscaping and other features remaining as final Work.

B. Protect existing structures, fences, roads, sidewalks, paving, mailboxes curbs, etc.

1.5 SUBMITTALS

A. Section 013300 - Submittal Procedures: Requirements for submittals.

B. Submit product data for all items to be installed and/or constructed within this Section.

C. Manufacturer's Certificate: Certify Products meet or exceed specified requirements.

1.6 CLOSEOUT SUBMITTALS

A. Section 017000 - Execution and Closeout Requirements: Requirements for submittals.

B. Operation and Maintenance Data: Include maintenance instructions, cutting method and maximum grass height; types, application frequency, and recommended coverage of fertilizer.

1.7 QUALITY ASSURANCE

A. Provide seed mixture in containers showing percentage of seed mix, germination percentage, inert matter percentage, weed percentage, year of production, net weight, date of packaging, and location of packaging.

B. The Contractor shall make arrangements to obtain seed materials with nurseries a maximum of 30 days after he/she is awarded the contract and provide a list of suppliers and seed mix to the Engineer for approval.

1.8 REGULATORY REQUIREMENTS

A. Comply with regulatory agencies for fertilizer and herbicide composition.

1.9 QUALIFICATIONS

A. Seed Supplier: Company specializing in manufacturing, growing and cultivating the products specified in this section with minimum three years documented experience.

B. Installer: Company specializing in performing work of this section with minimum 3 years documented experience.

C. Maintenance Services: Shall be paid by the Contractor for up to one (1) year to guarantee establishment of growth.

1.10 DELIVERY, STORAGE, AND HANDLING

A. Section 016000 - Product Requirements: Product storage and handling requirements.

B. Deliver grass seed mixture in sealed containers. Seed in damaged packaging is not acceptable.

C. Deliver fertilizer in waterproof bags showing weight, chemical analysis, and name of manufacturer.

1.11 MAINTENANCE SERVICE

A. Section 017000 - Execution and Closeout Requirements: Requirements for maintenance service.

B. Maintain seeded and sodded areas immediately after placement until grass is well established, exhibits a vigorous growing condition and is accepted by Owner. Guarantee replacement of dead material for one year from date of substantial completion.

C. Contractor shall be responsible for maintaining adequate seedbed moisture until the sodbed is established.

1.12 WARRANTY AND REPLACEMENT

A. Seeded areas must have a relatively uniform stand of grass with no bare spots over 6 inches square at the time of substantial completion. Reseed at the original rate. All areas failing to establish growth within ninety (90) days after germination or one growing season, whichever is longest, for any reason whatsoever, will be redone at the contractor's expense.

PART 2 PRODUCTS

2.1 MATERIALS

A. Furnish materials in accordance with Municipal, Federal and State Standards.

B. Topsoil: Imported, friable loam; free of subsoil, roots, grass, excessive amount of weeds, stone, and foreign matter; acidity range (pH) of 5.5 to 7.5; containing a minimum of 4 percent and a maximum of 25 percent organic matter.

1. Reused topsoil excavated from the site will be free of subsoil, roots, grass, excessive amount of weeds, stone and foreign matter.

C. Grass Seed Mix:

1. Survivor Mix:
15% Kentucky Bluegrass (1 variety)
15% Turf Type (1 elite variety) Perennial Ryegrass
15% Chewings Fescue (1 elite variety)
15% Creeping Red Fescue (1 variety)
40% Turf Type Tall Fescue (1 elite variety)

D. Fertilizer: FS O-F-241, type and grade recommended for grass, with 50% of the elements derived from organic sources and of proportion necessary to eliminate deficiencies of topsoil to the following proportions: 18% nitrogen, 24% phosphoric acid, 6% potassium.

1. To be placed on landscape seeding.

E. Mulch: Small grain straw mulch that is clean and weed free unless otherwise indicated.

1. Hydroseeding Mulching Material: Conwed Verdoyl #2000.
2. Mulch Blankets:
a. North American Green SC150BN, or approved equal, in areas with slopes 4 horizontal to 1 vertical and steeper as indicated on the plans or directed by the Engineer.
1) Install all mulch blankets with 6 inch North American Green Eco Stakes, or approved equal. Stake according to manufacturer's recommendations as approved by the Engineer.

F. Soil Binding Agent: Non-toxic, biodegradable materials that are environmentally safe. Applied at a rate of 1 lb per 1000 sq ft.

G. Water: Clean, fresh and free of substances or matter which could inhibit vigorous growth of grass.

H. Lime: ASTM C602, Class T agricultural limestone containing a minimum 80 percent calcium carbonate equivalent.

I. Herbicide: 25% Prometon, 4-bis, and 75% inert ingredients.

2.2 SOURCE QUALITY CONTROL

A. Section 014000 - Quality Requirements: Testing, inspection and analysis requirements.

B. Notify Engineer 72 hours prior to hydroseeding and fertilizing for approval to proceed.

PART 3 EXECUTION

3.1 EXAMINATION

A. Section 013000 - Administrative Requirements: Verification of existing conditions before starting work.

3.2 PREPARATION OF SUBSOIL

A. Prepare sub-soil to eliminate uneven areas and low spots. Maintain lines, levels, profiles and contours. Make changes in grade gradual. Blend slopes into level areas.

B. Remove foreign materials, weeds and undesirable plants and their roots. Remove contaminated sub-soil. Do not bury foreign material.

C. Scarify subsoil to a depth of 3 inches where topsoil is to be placed. Repeat cultivation in areas where equipment, used for hauling and spreading topsoil, has compacted sub-soil.

3.3 FERTILIZING

A. Apply fertilizer at application rate 8 lbs per 1,000 square feet.

B. Apply after smooth raking of topsoil and prior to roller compaction.

C. Do not apply fertilizer at same time or with same machine used to apply seed.

D. Mix fertilizer thoroughly into upper 2 inches of topsoil.

E. Lightly water soil to aid dissipation of fertilizer. Irrigate top level of soil uniformly.

3.4 SEEDING

A. Apply seed at rate of 8 lbs per 1,000 square feet, evenly in two intersecting directions. Rake in lightly.

B. Do not seed areas in excess of that which can be mulched on same day.

C. Planting Season: May 1 to October 10 unless otherwise approved by the Engineer.

D. Do not sow immediately following rain, when ground is too dry, or when winds are over 12 mph.

E. Roll seeded area with roller not exceeding 112 lbs/linear foot.

F. Immediately following seeding and compacting, apply mulch to thickness of 1/8 inches. Maintain clear of shrubs and trees.

G. Apply water with fine spray immediately after each area has been mulched. Saturate to 4 inches of soil.

3.5 HYDROSEEDING

A. Apply seeded slurry for lawn with a hydraulic seeder at a rate of 8 lbs per 1000 sq ft evenly in two intersecting directions. Native seed will be seeded at at the rate earlier specified in this section.

B. Do not hydroseed area in excess of what which can be mulched on same day.

C. Immediately following seeding, apply mulch at a rate of 50 lbs per 1000 sq ft. Maintain clear of shrubs and trees.

D. Apply water with a fine spray immediately after each area has been mulched. Saturate to 3 inches of soil.

3.6 SEED PROTECTION

A. Cover seeded slopes where grade is 6 inches per foot or greater with erosion fabric. Roll fabric onto slopes without stretching or pulling.

B. Lay fabric smoothly on surface, bury top end of each section in 6-inch-deep excavated topsoil trench. Overlap edges and ends of adjacent rolls minimum 12 inches. Backfill trench and rake smooth, level with adjacent soil.

C. Secure outside edges and overlaps at 36 inch intervals with stakes.

D. Lightly dress slopes with topsoil to ensure close contact between fabric and soil.

3.7 QUALITY CONTROL

A. Notify Engineer 3 working days prior to seeding and fertilizing for approval to proceed.

B. Seeding shall not be done during windy weather (above 25 mph) or when the ground is overly wet (saturated) or frozen.

C. All areas that are partially completed to grade, will be prepare and seeded during the first available planting period and will not be allowed to sit idle for long periods of time without receiving the erosion control specified in the contract.

D. Planting Season: April 1 to May 31, or September 1 to October 31. No Seeding shall be done before or after these dates with the Engineer's written approval.

3.8 MAINTENANCE

A. Contractor shall guarantee a uniform grass growth over the entire project and shall reseed bare and thin areas until this is accomplished at no additional cost to the project.

B. Immediately reseed areas showing bare spots.

C. Repair any eroded areas and reseed immediately.

D. Water to prevent grass and soil from drying out.

E. Roll surface to remove minor depressions or irregularities.

F. Control growth of weeds. Apply herbicides. Remedy damage resulting from improper use of herbicides.

G. Repair washouts or gullies.

H. Monitor all seeded areas during site visits for any issues.

I. Protect from traffic and erosion in newly seeded areas is the responsibility of the Contractor. Safety fences and/or silt fences with appropriate signage may be used at the Contractor's expense until the grasses are fully established.

END OF SECTION

YPSILANTI TOWNSHIP
ARPA PARKS PROJECT
FORD LAKE PARK & WEST WILLOW PARK SHELTER REPAIRS
YPSILANTI, MI

PLAN INDEX			
FILE NO.	DESCRIPTION	DWG #	SHT #
DA-1472- 1	COVER	T1.0	1
DA-1472- 2	REFERENCE SHEET	T2.0	2
DA-1472- 3	WEST WILLOW PARK SHELTER PLANS	A0.0	3
DA-1472- 4	FORD LAKE PARK SHELTER DRAIN TILE SITE PLAN	A1.0	4
DA-1472- 5	FORD LAKE PARK SHELTER 1 PLANS	A2.0	5
DA-1472- 6	FORD LAKE PARK SHELTER 2 PLANS	A3.0	6
DA-1472- 7	FORD LAKE PARK SHELTER 3 PLANS	A4.0	7
DA-1472- 8	FORD LAKE PARK SHELTER 4 PLANS	A5.0	8
DA-1472- 9	DETAILS	A6.0	9

AREA MAP
NOT TO SCALE

FORD LAKE PARK
SECTION 23
T.3S. - R.7E.
YPSILANTI
WASHTENAW COUNTY, MI

WEST WILLOW PARK
SECTION 11
T.3S. - R.7E.
YPSILANTI
WASHTENAW COUNTY, MI

GENERAL NOTES

THE CONTRACTOR SHALL CALL "MISS DIG", TELEPHONE 811, A MINIMUM OF 3 WORKING DAYS PRIOR TO STARTING ANY CONSTRUCTION ON THIS PROJECT. THIS DOES NOT RELIEVE THE CONTRACTOR OF THE RESPONSIBILITY OF NOTIFYING UTILITY OWNERS WHO MAY NOT BE A PART OF THE "MISS DIG" SYSTEM.

THE EXISTING UTILITIES ON THESE DRAWINGS HAVE BEEN SHOWN ACCORDING TO THE BEST AVAILABLE INFORMATION. CONTRACTOR SHALL FIELD LOCATE ALL UTILITIES PRIOR TO BEGINNING CONSTRUCTION AND SHALL NOTIFY THE ENGINEER AS TO WHERE POSSIBLE CONFLICT EXISTS.

ALL PRODUCTS SHALL BE MANUFACTURER'S BEST BRAND OR GRADE AND INSTALLED AS PER MANUFACTURER'S RECOMMENDATIONS.

ALL WORK SHALL BE GUARANTEED FOR A MINIMUM OF ONE YEAR FROM THE DATE OF FINAL PAYMENT.

CONSTRUCT ALL MATERIALS STRAIGHT, PLUMB, AND LEVEL UNLESS SPECIFICALLY NOTED OR INDICATED OTHERWISE.

ALL WORK SHALL BE INSTALLED IN CONFORMANCE WITH FEDERAL, STATE, AND LOCAL - CODES, RULES, AND REGULATIONS.

ALL MATERIALS SHALL BE INSTALLED IN CONFORMANCE WITH INDUSTRY STANDARDS AND THE ASSOCIATION THAT PERTAINS TO THE PARTICULAR PRODUCT. FOR EXAMPLE, AISC - AMERICAN INSTITUTE FOR STEEL CONSTRUCTION. USE THE MOST CURRENT EDITION WHEN REFERRING TO INDUSTRY STANDARDS.

SITE PROTECTION: THE CONTRACTOR WILL BE RESPONSIBLE FOR PROTECTING ANY AND ALL ADJACENT EXISTING STRUCTURES AND UTILITIES DURING CONSTRUCTION. ANY DAMAGE INCURRED DURING CONSTRUCTION SHALL, AT A MINIMUM, BE RESTORED TO A STATE EQUAL TO ITS PRE-CONSTRUCTION STATE AT THE CONTRACTORS EXPENSE.

SITE RESTORATION: ALL DISTURBED AREAS SHALL BE RESTORED AS NOTED ON THE PLANS AND IN ACCORDANCE WITH THE SPECIFICATIONS. ALL SEEDED AREAS SHALL RECEIVE A MINIMUM OF 3 INCHES OF TOPSOIL UNLESS OTHERWISE NOTED. THE RESTORED AREAS SHALL BE MAINTAINED UNTIL VEGETATION IS WELL ESTABLISHED. ANY AREAS DISTURBED FOR ANY REASON PRIOR TO FINAL ACCEPTANCE OF THE PROJECT WILL BE CORRECTED BY THE CONTRACTOR AT NO ADDITIONAL COST TO THE OWNER.

BY	MARK	REVISIONS	DATE

THE WORK REPRESENTED BY THIS DRAWING WAS DESIGNED BY THE ENGINEER FOR THIS SPECIFIC APPLICATION AND SPECIFIC LOCATION DESCRIBED HEREON IN ACCORDANCE WITH THE CONDITIONS PREVALENT AT THE TIME THE DESIGN WAS DONE. THE ENGINEER DOES NOT GUARANTEE AND WILL NOT BE LIABLE FOR ANY OTHER LOCATION, CONDITION, DESIGN OR PURPOSE.

YPSILANTI TOWNSHIP ARPA PARKS PROJECT
YPSILANTI, MI

COVER SHEET

SAGINAW OFFICE
230 S. Washington Ave.
Saginaw, MI 48607
Tel. 989-754-4717
Fax. 989-754-4440
www.SpicerGroup.com

DE. BY:	CH. BY: DWM	PROJECT NO.	
DR. BY:	APP. BY: DWM	134586SG2023	
STDS.		SHEET 1 OF 9	T
DATE AUGUST, 2023		FILE NO.	1.0
SCALE NONE		DA-1472 -01	

C:\Projects\2023\134586 - Ypsilanti Twp Parks Proj\T\T-GEOTECH\Plans\134586 - Parks.dwg, 8/23/2023 11:47:51 AM, Brian Lynch
PLOTTED BY:
PLOTTING SCALE:
ACAD FILE:
REF. FILE:

AC	AIR CONDITIONING
ACOUST	ACOUSTICAL
ACT	ACOUSTICAL CEILING TILE
ADA	AMERICANS WITH DISABILITIES ACT
ADJ	ADJUSTABLE
AFF	ABOVE FINISHED FLOOR
AGG	AGGREGATE
AL	ALUMINUM
ALT	ALTERNATE
ANCH	ANCHOR
ANGL / ∠	ANGLE
APPROX	APPROXIMATE (LY)
ARCH	ARCHITECT (URAL)
ASPH	ASPHALT
AV	AUDIO/VISUAL
BB	BACK TO BACK
BD	BOARD
BF	BARRIER FREE
BIT	BITUMINOUS
BLDG	BUILDING
BLK	BLOCK
BLKG	BLOCKING
BM	BEAM/BENCH MARK
BOT	BOTTOM
BRCKT	BRACKET
BRG	BEARING
BUR	BUILT-UP ROOF
CAB	CABINET
CB	CATCH BASIN
CC	CLOSED CELL (FOAM INSULATION)
CEM	CEMENT
CER	CERAMIC
CFM	CUBIC FEET PER MINUTE
CFS	COLD FORMED STEEL
CI	CONTINUOUS INSULATION
CIP	COMPACTED IN PLACE/ CAST IN PLACE
CJ	CONTROL JOINT
CL	CENTERLINE
CLG	CEILING
CLK	CAULK
CMU	CONCRETE MASONRY UNIT
COL	COLUMN
COMP	COMPACTED
CONC	CONCRETE
CONST	CONSTRUCTION
CONT	CONTINUOUS
CONTR	CONTRACTOR
CORR	CORRIDOR
CRS	COURSES
CPT	CARPET
CSK	COUNTERSUNK
CT	CERAMIC TILE
CU	CONDENSING UNIT
CUH	CABINET UNIT HEATER
DAMPG	DAMPROOFING
DEG / °	DEGREE
DEMO	DEMOLITION
DF	DRINKING FOUNTAIN
DIA	DIAMETER
DIM	DIMENSION
DIV	DIVISION
DP	DEPTH/DEEP
DR	DOOR
DS	DOWNSPOUT
DTL	DETAIL
DWG	DRAWING
DWL	DOWEL
EF	EXHAUST FAN
EIFS	EXTERIOR INSULATED FINISH SYSTEM
EJ	EXPANSION JOINT
EL	ELEVATION
ELEV	ELEVATOR
EP	ELECTRICAL PANEL
EQ	EQUAL
EQUIP	EQUIPMENT
ES	EACH SIDE
EWC	ELECTRICAL WATER COOLER
EX/EXIST	EXISTING
EXH	EXHAUST
EXP	EXPANSION
EXT	EXTERIOR
FA	FRESH AIR
FD	FLOOR DRAIN
FE	FIRE EXTINGUISHER
FEC	FIRE EXTINGUISHER CABINET
FF	FORCED FLOW CABINET HEATER
FHC	FIRE HOSE CABINET
FIN	FINISH
FIP	FOAMED IN PLACE INSULATION
FLASH	FLASHING
FLR	FLOOR
FOUND	FOUNDATION
FRMG	FRAMING
FT	FEET
FTG	FOOTING
FURG	FURRING
G	GAS
GA	GAUGE
GALV	GALVANIZED
GB	GRAB BAR
GC	GENERAL CONTRACTOR
GL	GLASS
GLZD/GLZG	GLAZED/GLAZING
GRAV	GRAVEL
GRV	GRAVITY ROOF VENT
GYP	GYPSUM
HB	HOSE BIB
HDCP	HANDICAP
HDR CO	HEADER COURSE
HDWR	HARDWIRE
HGT/HT	HEIGHT
HM	HOLLOW METAL
HORZ	HORIZONTAL
HP	HIGH POINT
HR	HOUR
HVAC	HEATING, VENTILATION, AIR CONDITIONING
ID	INSIDE DIAMETER
IN	INCH
INCL	INCLUDED
INSUL	INSULATION
INT	INTERIOR
JST	JOIST
JT	JOINT
LAM	LAMINATE(D)
LAV	LAVATORY
LB/#	POUNT
LG	LENGTH
LKR	LOCKER
LLH	LONG LEG HORIZONTAL
LLV	LONG LEG VERTICAL
LOC	LOCATIONS
LP	LOW POINT
LT FIX	LIGHT FIXTURE
LT WT	LIGHT WEIGHT
MFGR	MANUFACTURER
MAR	MARBLE
MAS	MASONRY
MAT	MATERIAL
MAU	MAKE UP AIR UNIT
MAX	MAXIMUM
MB	MARKER BOARD
MD	METAL DECK
MECH	MECHANICAL
MET / MTL	METAL
MEZZ	MEZZANINE
MH	MANHOLE
MIN	MINIMUM/MINUTE
MISC	MISCELLANEOUS
ML	METAL LATH
MO	MASONRY OPENING
MS	METAL STUD
MT	METAL THRESHOLD
MTP	METAL TOILET PARTITION
NIC	NOT IN CONTRACT
NO/#	NUMBER
NOM	NOMINAL
NTS	NOT TO SCALE
OC	ON CENTER
OD	OUTSIDE DIAMETER
OH	OVERHEAD DOOR
OPNG	OPENING
OPP	OPPOSITE
PARG	PARGING
PART	PARTICLE
PARTN	PARTITION
PERF	PERFORATED
PL	PLATE/PROPERTY LINE
PLAM	PLASTIC LAMINATE
PLAS	PLASTER
PLUMB	PLUMBING
PLYWD	PLYWOOD
PORC	PORCELAIN
PREFAB	PREFABRICATED
PSF	POUNDS PER SQUARE FEET
PSI	POUNDS PER SQUARE INCH
PTD	PAINTED/PAPER TOWEL DISPENSER
PVC	POLYVINYL CHLORIDE
QT	QUARRY TILE
R	RADIUS/RISER
RAG	RETURN AIR GRILLE
RB	RUBBER BASE
RC	RAIN CONDUCTOR
REF	REFERENCE/REFRIGERATOR
REINF	REINFORCING
REQD	REQUIRED
RES	RESILIENT
REV	REVISION
RF	ROOF EXHAUST FAN
RLGT	REGLET
RM	REMOVABLE MULLION/ROOM
RO	ROUGH OPENING
ROW	RIGHT OF WAY
ROWLK	ROWLOCK
RS	ROOF SUMP
RTU	ROOF TOP UNIT
RV	ROOF VENT
SK	SINK
S & V	STAIN & VARNISH
SAG	SUPPLY AIR GRILLE
SAN	SANITARY
SCHED	SCHEDULE
SECT	SECTION
SF	SPLIT FACE
SHT	SHEET
SIM	SIMILAR
SKYLT	SKYLIGHT
SLDR	SOLDIER
SLNT	SEALANT
SPEC(S)	SPECIFICATION(S)
SPKR	SPEAKER
SQ	SQUARE
SS	SERVICE SINK/STAINLESS STEEL
ST	STORM
STD	STANDARD
STL	STEEL
STRUCT	STRUCTURAL
SUSP	SUSPENDED
T	TREAD
T&B / TB	TOP & BOTTOM
TB	TACK BOARD
TC	TOP OF CURB
TEMP	TEMPERED/TEMPORARY
TERR	TERRAZZO
TH	THRESHOLD
TOC	TOP OF CONCRETE
TOF	TOP OF FOOTING
TOM	TOP OF MASONRY
TOS	TOP OF STEEL
TR	TREATED
TV	TELEVISION
TYP	TYPICAL
UNO	UNLESS NOTED OTHERWISE
UV	UNIT VENTILATOR
VAP BAR	VAPOR BARRIER
VB	VINYL BASE
VCT	VINYL COMPOSITE TILE
VERT	VERTICAL
VIF	VERIFY IN FIELD
VWC	VINYL WALL COVERING
W	WATER
W/	WITH
W/O	WITHOUT
WC	WATER CLOSET
WD	WIDTH/WOOD
WH	WATER HEATER
WP	WATERPROOFING / WEATHERPROOF / WORKING POINT
WWF	WELDED WIRE FABRIC

HATCH / MATERIAL LEGEND

- ACOUSTICAL PANEL OR TILE
- ASPHALT ON AGGREGATE
- BATT INSULATION
- BRICK
- COMPOSITION/PLYWOOD
- CONCRETE
- CONCRETE MASONRY UNIT
- CONTINUOUS WOOD FRAMING OR BLOCKING
- FINISH WOOD
- GRANULAR FILL
- CEMENT GROUT
- INTERRUPTED WOOD BLOCKING/SHIMS
- MARBLE
- PLASTER/GYPSUM BOARD
- RIGID INSULATION
- SOIL
- STONE/GRAVEL
- SPRAY FOAM INSULATION

SYMBOL LEGEND

- FOUNDATION TYPE TAG
- NEW KEYED NOTE TAG
- REVISION TAG
- DEMO KEYED NOTE TAG
- DOOR NUMBER TAG
- WINDOW TYPE TAG
- WALL TYPE TAG
- EQUIPMENT TAG
- BF CLEARANCE TAG
- HAZARD TAG
- FIRE EXTINGUISHER TAG

ELEVATION — 2 / A4.0 — SCALE 1/4" = 1'-0" — INTERIOR / EXTERIOR

DETAIL/SECTION — 2 / A5.0 — SCALE: 3/4" = 1'-0" — DETAIL / SECTION

PLAN — North — SCALE: 1/8" = 1'-0" — FLOOR PLAN

FIN FLOOR EL. = 100'-0" — DATUM ELEVATION

A — COLUMN LINE

ROOM NAME 101 — ROOM NAME / ROOM NUMBER

NEW DOOR

EXISTING DOOR

3/A5.0 / 4/A5.0 / 1/A5.0 / 2/A5.0 — ELEVATION CALLOUTS

WALL SECTION

BUILDING SECTION

BY	MARK	REVISIONS	DATE

THE WORK REPRESENTED BY THIS DRAWING WAS DESIGNED BY THE ENGINEER FOR THIS SPECIFIC APPLICATION AND SPECIFIC LOCATION DESCRIBED HEREON IN ACCORDANCE WITH THE CONDITIONS PREVALENT AT THE TIME THE DESIGN WAS DONE. THE ENGINEER DOES NOT GUARANTEE AND WILL NOT BE LIABLE FOR ANY OTHER LOCATION, CONDITION, DESIGN OR PURPOSE.

YPSILANTI TOWNSHIP ARPA PARKS PROJECT
YPSILANTI, MI

REFERENCE SHEET

SAGINAW OFFICE
230 S. Washington Ave.
Saginaw, MI 48607
Tel. 989-754-4717
Fax. 989-754-4440
www.SpicerGroup.com

DE. BY:	CH. BY: DWM	PROJECT NO.	134586SG2023
DR. BY:	APP. BY: DWM		
STDS.		SHEET 2 OF 9	T
DATE	AUGUST, 2023	FILE NO.	2.0
SCALE	NONE	DA-1472-02	

PLOTTING SCALE: FULL
PLOT FILE: ACAD FILE:

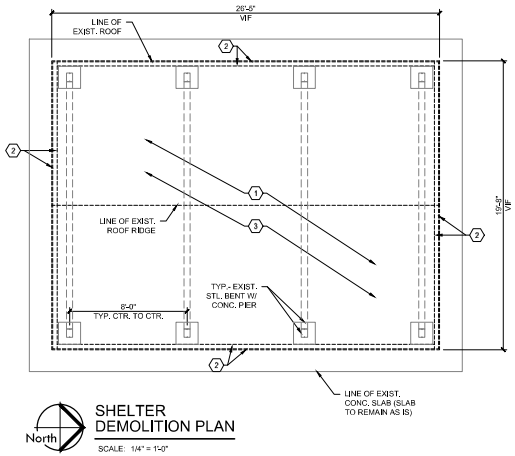

SHELTER DEMOLITION PLAN

SCALE: 1/4" = 1'-0"

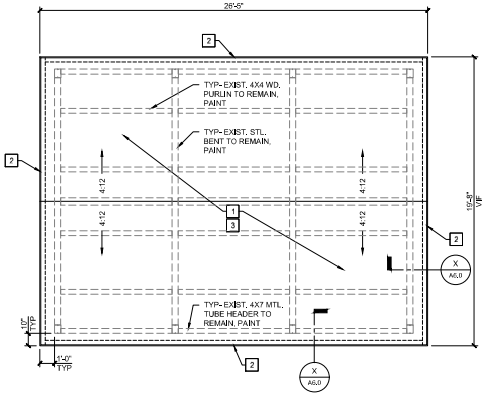

SHELTER ROOF PLAN

SCALE: 1/4" = 1'-0"

DEMO KEYED NOTES:

1. REMOVE EXISTING ROOF SHINGLES, DRIP EDGE, & WOOD ROOF DECK COMPLETELY
2. REMOVE EXISTING FASCIA & 2X4 WOOD BLOCKING
3. PREP EXISTING STRUCTURE TO REMAIN FOR NEW PAINT

DEMOLITION NOTES

§3303.1 MBC 2015 DEMOLITION

§3303.1 CONSTRUCTION DOCUMENTS. A SCHEDULE FOR DEMOLITION SHALL BE SUBMITTED WHERE REQUIRED BY THE BUILDING OFFICIAL. WHERE SUCH INFORMATION IS REQUIRED, NO WORK SHALL BE DONE UNTIL SUCH CONSTRUCTION DOCUMENTS OR SCHEDULE, OR BOTH, ARE APPROVED.

§3303.2 PEDESTRIAN PROTECTION. THE WORK OF DEMOLISHING THE EXISTING ROOF SHALL NOT BE COMMENCED UNTIL PEDESTRIAN PROTECTION IS IN PLACE.

GENERAL NOTES FOR DEMOLITION:

1. FIELD VERIFY ALL EXISTING CONDITIONS AND DIMENSIONS. IF FIELD CONDITIONS ARE NOT AS SHOWN ON PLAN, CONTACT THE PROJECT ARCHITECT OR ENGINEER IMMEDIATELY PRIOR TO PROCEEDING WITH ANY WORK.
2. PROVIDE APPROPRIATE BARRICADES, SIGNAGE, AND OTHER SAFETY PRECAUTIONS SO AS TO PROTECT VISITORS, TRADESMEN, AND EXISTING REMAINING CONDITIONS.
3. COMPLETELY REMOVE ALL WORK AND RELATED WORK IN AREAS DESIGNATED ON THE PLAN.
4. ALL WORK TO BE COMPLETED BY APPROPRIATE, EXPERIENCED TRADES (I.E. ELECTRICAL DEMOLITION BY ELECTRICIANS, ETC.)
5. RESTORE EXISTING AREAS WHICH ARE DAMAGED DURING DEMOLITION. MATCH EXISTING MATERIALS, AND FINISHES.
6. DO NOT USE EXPLOSIVES OR UNSAFE DEMOLITION METHODS.
7. REMOVE ALL DEBRIS FROM THE SITE. DO NOT BURN REFUSE ON SITE. MATERIAL TO BE TRANSPOSED TO AN APPROVED DISPOSAL SITE. COORDINATE SALVAGEABLE ITEMS WITH THE OWNER. STORE SALVAGEABLE ITEMS WITHIN DESIGNATED AREAS.
8. THE CONTRACTOR SHALL PROVIDE PROPER SHORING AND BRACING WHERE NEEDED.
9. ANY AREAS WITH LEAD PAINT WILL NOT BE ABRADED, CUT, OR IGNITED TO REDUCE POTENTIAL HARMFUL IMPACT TO WORKERS.
10. ARCHITECT/ENGINEER IS NOT RESPONSIBLE FOR THE LOCATIONS OF EXISTING UTILITIES/FIXTURES AS SHOWN ON PLANS. DISCREPANCIES IN LOCATION, SIZE,AND MATERIAL ARE LIKELY TO EXIST.

PROPOSED KEYED NOTES:

1. NEW ASPHALT SHINGLES ON 15# FELT W/ NEW METAL DRIP EDGE ON NEW 3/4" TRTD. PLYWD. ROOF DECKING
2. NEW 1X4 CEDAR WOOD FASCIA & 2X4, ON THE FLAT, WOOD BLOCKING, PAINT
3. NEW PAINT THROUGHOUT

NEW CONSTRUCTION NOTES

1. ALL WORK SHALL CONFORM TO THE APPLICABLE BUILDING CODE IN EFFECT AT THE TIME OF CONSTRUCTION.
2. ALL WORK SHALL BE COMPLETED TO CUSTOMARY INDUSTRY STANDARDS.
3. CONTRACTOR SHALL REPLACE EXISTING OSB ROOF DECKING WITH 5/8" PLYWOOD SHEATHING.
4. CONTRACTOR SHALL NOT LEAVE ROOF UN-COVERED OVER NIGHT OR IN THE EVENT OF INCLEMENT WEATHER.
5. ALL ROOFING PRODUCTS SHALL COMPLY WITH THE SPECIFICATIONS.
6. APPLY 15# FELT PAPER OVER ENTIRE ROOF SURFACE PRIOR TO INSTALLATION OF SHINGLE ROOFING.
7. DRIP EDGE AND ALL OTHER ROOF ACCESSORIES SHALL BE ALUMINUM AND PROVIDED BY A SINGLE MANUFACTURER. ALUMINUM GAUGE, COATING AND COLOR AS SPECIFIED.
8. CONTRACTOR SHALL POWER WASH, SCRAPE AND PAINT ALL COMPONENTS OF THE PAVILION THAT ARE NOT CONCRETE, DRIP EDGE, OR SHINGLES. OWNER TO SELECT COLOR AT TIME OF CONSTRUCTION.
9. CONTRACTOR SHALL CLEAN WORK AREA AND PROPERLY DISPOSE OF ALL DEBRIS AT THE END OF EACH DAY.

BY	MARK	REVISIONS	DATE

THE WORK REPRESENTED BY THIS DRAWING WAS DESIGNED BY THE ENGINEER FOR THIS SPECIFIC APPLICATION AND SPECIFIC LOCATION DESCRIBED HEREON IN ACCORDANCE WITH THE CONDITIONS PREVALENT AT THE TIME THE DESIGN WAS DONE. THE ENGINEER DOES NOT GUARANTEE AND WILL NOT BE LIABLE FOR ANY OTHER LOCATION, CONDITION, DESIGN OR PURPOSE.

YPSILANTI TOWNSHIP ARPA PARKS PROJECT
YPSILANTI, MI

WEST WILLOW PARK SHELTER PLANS

SAGINAW OFFICE
230 S. Washington Ave.
Saginaw, MI 48607
Tel. 989-754-4717
Fax. 989-754-4440
www.SpicerGroup.com

DE. BY: NJS	CH. BY: DWM	PROJECT NO.	
DR. BY: LYG	APP. BY: DWM	134586SG2023	
STDS.		SHEET 3 OF 9	A
DATE AUGUST, 2023		FILE NO.	0.0
SCALE 1/4" = 1'-0"		DA-1472 -03	

PLOTTING SCALE:
PEL
PG
REF.
AUG 7 FILE:

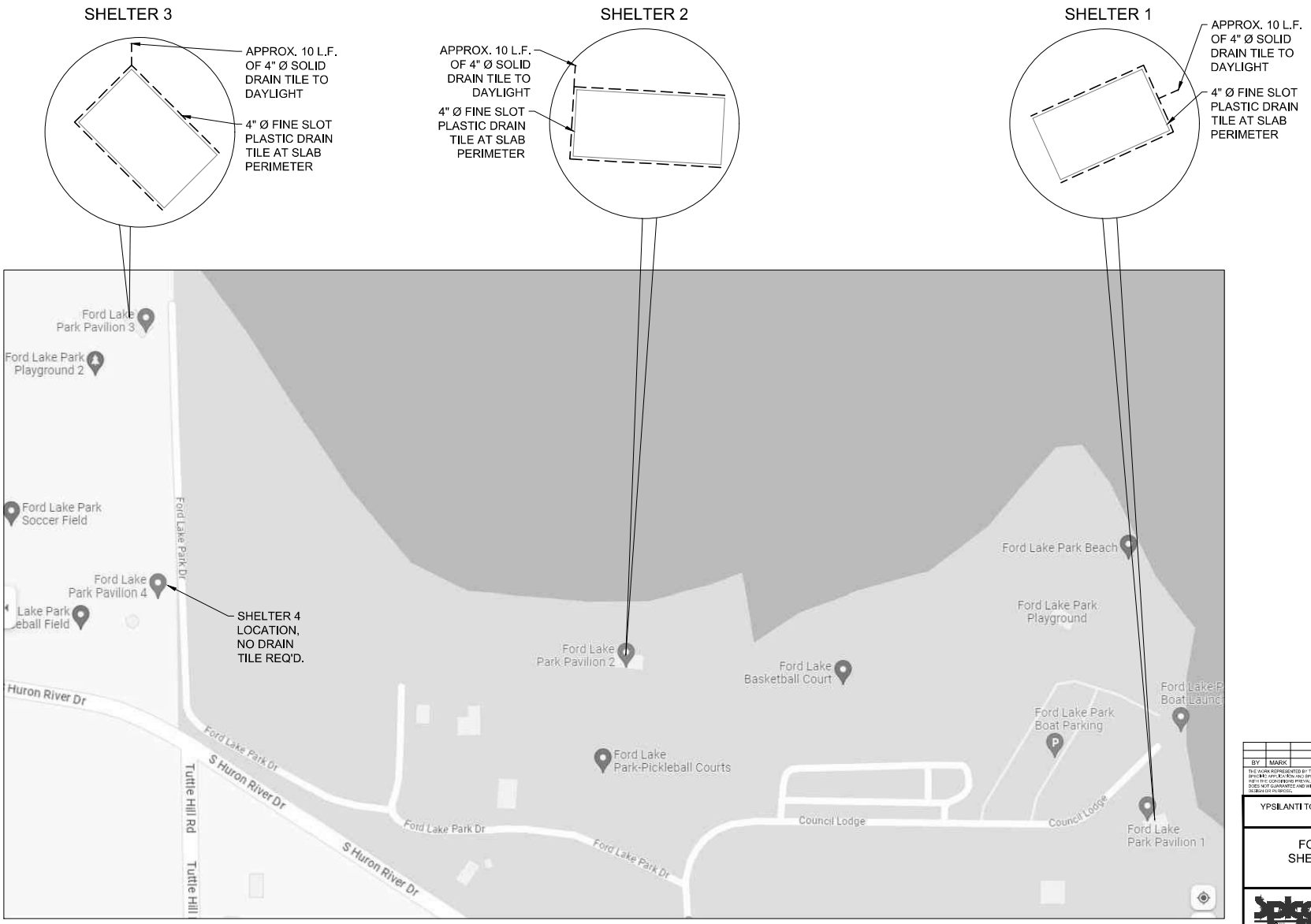

SHELTER DRAIN TILE SITE PLAN

SCALE: NONE

BY	MARK	REVISIONS	DATE

THE WORK REPRESENTED BY THIS DRAWING WAS DESIGNED BY THE ENGINEER FOR THIS SPECIFIC APPLICATION AND SPECIFIC LOCATION DESCRIBED HEREIN IN ACCORDANCE WITH THE CONDITIONS PREVALENT AT THE TIME THE DESIGN WAS DONE. THE ENGINEER DOES NOT GUARANTEE AND WILL NOT BE LIABLE FOR ANY OTHER LOCATION, CONDITION, DESIGN OR PURPOSE.

YPSILANTI TOWNSHIP ARPA PARKS PROJECT
YPSILANTI, MI

FORD LAKE PARK SHELTER DRAIN TILE SITE PLAN

SAGINAW OFFICE
230 S. Washington Ave.
Saginaw, MI 48607
Tel. 989-754-4717
Fax. 989-754-4460
www.SpicerGroup.com

DE. BY: NJS	CH. BY: DWM	PROJECT NO.	
DR. BY: NJS	APP. BY: DWM	134586SG2023	
STDS.		SHEET 4 OF 9	A
DATE AUGUST, 2023		FILE NO.	1.0
SCALE NONE		DA-1472-04	

PLOTTED: 8/28/2023 - 10:48AM
XREFS: SCALE: 1
PC: AUTO FEE:

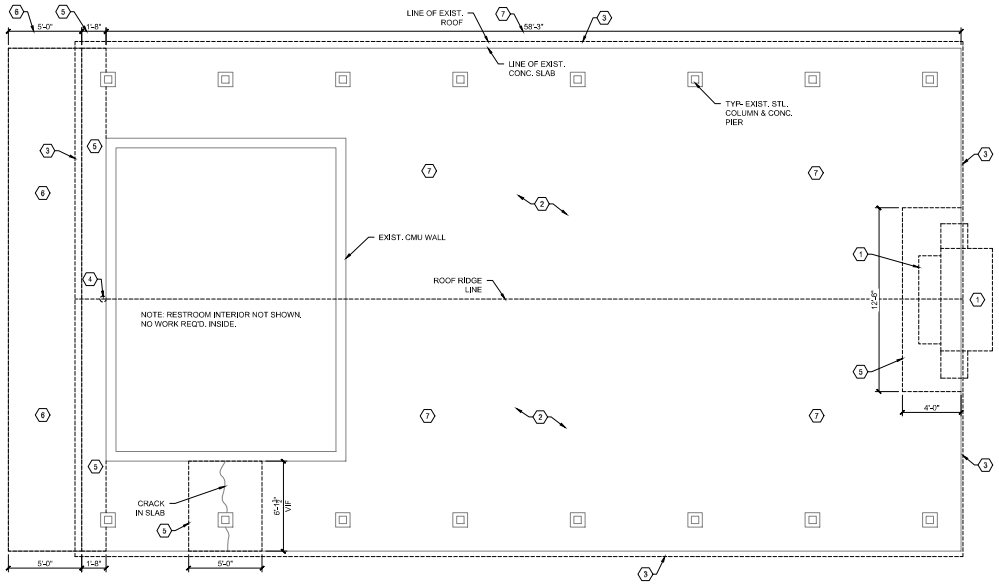

SHELTER 1
DEMOLITION PLAN
SCALE: 1/4" = 1'-0"

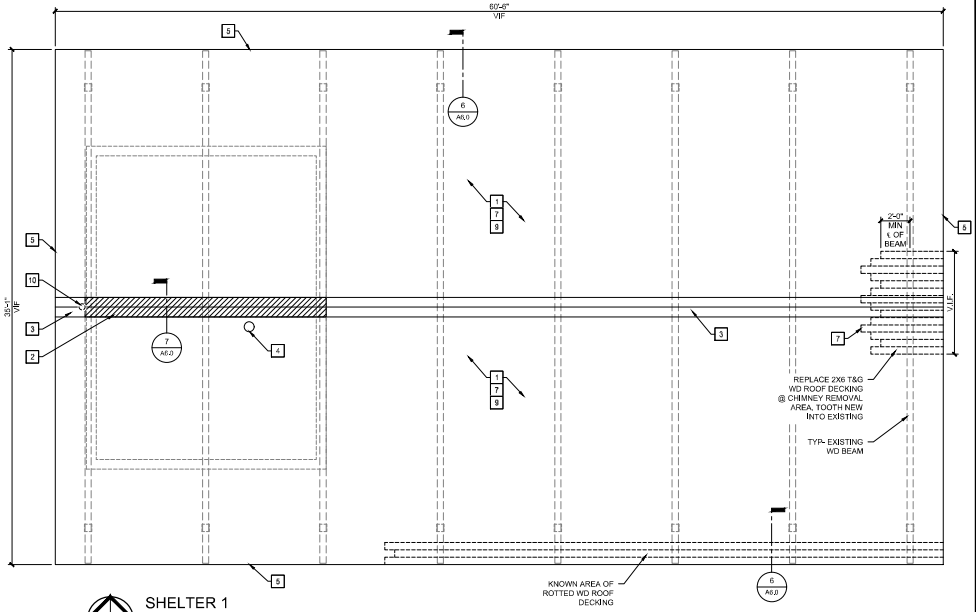

SHELTER 1
ROOF PLAN
SCALE: 1/4" = 1'-0"

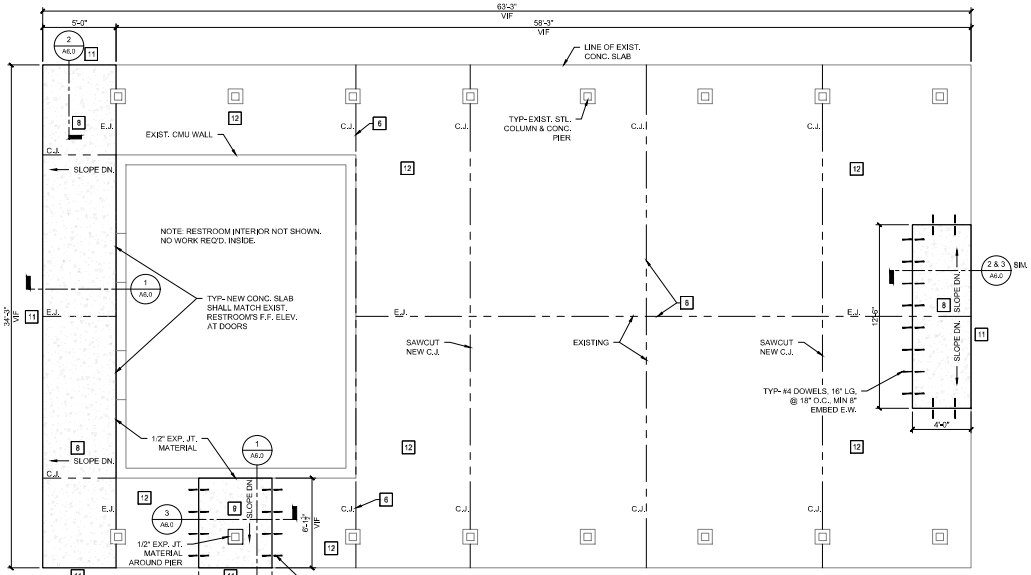

SHELTER 1
FLOOR PLAN
SCALE: 1/4" = 1'-0"

NOTE:
- E.J. = EXPANSION JOINT
- C.J. = CONTROL JOINT
- NEW SLABS SHALL SLOPE A MAX. 1/4" OR A MIN. 1/8" PER FOOT.
- SEE PARK PAVILION PLAN FOR DRAIN TILE LOCATION

PROPOSED KEYED NOTES:

1. NEW ASPHALT SHINGLES ON ICE & WATER SHIELD & NEW METAL DRIP EDGE
2. NEW VENTED RIDGE CAP WITH SHINGLES
3. NEW RIDGE CAP SHINGLES
4. FLASH/ BOOT EXISTING SOILS STACKS PER MANUFACTURER RECOMMENDATIONS
5. NEW 1X6 CEDAR WOOD FASCIA
6. CLEAN OUT EXISTING EXPANSION JOINTS & FILL WITH BACKER ROD & URETHANE SEALANT, CLEAN OUT EXISTING CONTROL JOINTS
7. REPAIR / REPLACE DECKING - CONTRACTOR TO FIELD VERIFY EXISTING DECKING CONDITION & REPLACE AS REQUIRED
8. NEW CONCRETE SLAB PORTION
9. POWER WASH, SCRAPE & STAIN ALL EXPOSED WOOD SURFACES ON THE UNDERSIDE OF ROOF INCLUDING BEAMS
10. NEW IP66 LED WALL PACK LIGHT FIXTURE w/ INTEGRAL PHOTOCELL AND FIELD SWITCHABLE CCT (3000K) AND LUMENS (FIELD VERIFY) BASED ON: LITHONIA #WPX04-LED-ALO-SWW2-MVOLT-PE-DDXD-M2
11. SITE RESTORATION
12. ALTERNATE ADD #1 - ENTIRELY NEW CONCRETE SLAB W/ 24" RAT WALL (SEE DETAILS)

DEMO KEYED NOTES:

1. REMOVE EXIST MASONRY CHIMNEY IN ITS ENTIRETY INCLUDING FOUNDATION & FOOTINGS
2. REMOVE EXISTING ROOFING DOWN TO EXISTING WOOD T&G DECKING. REPLACE ANY ROTTED DECKING TO MATCH
3. REMOVE EXISTING FASCIA
4. REMOVE EXISTING LIGHT FIXTURE
5. SAWCUT/ REMOVE PORTION OF CONCRETE SLAB
6. REMOVE ASPHALT WALK
7. ALTERNATE ADD #1 - REMOVE ENTIRE SLAB

NEW CONSTRUCTION NOTES

1. ALL WORK SHALL CONFORM TO THE APPLICABLE BUILDING AND ELECTRICAL CODES IN EFFECT AT THE TIME OF CONSTRUCTION.
2. ALL WORK SHALL BE COMPLETED TO CUSTOMARY INDUSTRY STANDARDS.
3. CONTRACTOR SHALL INSPECT EXISTING DECK THOROUGHLY AFTER SHINGLE REMOVAL AND REPAIR ANY DAMAGED AREAS. NOTIFY ARCHITECT IMMEDIATELY IF ANY DAMAGE IS FOUND.
4. CONTRACTOR SHALL PROVIDE A SQUARE FOOT COST FOR ROOF DECK REPLACEMENT IN THEIR BID.
5. CONTRACTOR SHALL NOT LEAVE ROOF UN-COVERED OVER NIGHT OR IN THE EVENT OF INCLEMENT WEATHER.
6. ALL ROOFING PRODUCTS SHALL COMPLY WITH THE SPECIFICATIONS.
7. APPLY SELF-SEALING SELF- ADHERING LEAK BARRIER OVER ENTIRE ROOF SURFACE PRIOR TO INSTALLATION OF SHINGLE ROOFING.
8. DRIP EDGE AND ALL OTHER ROOF ACCESSORIES SHALL BE ALUMINUM AND PROVIDED BY A SINGLE MANUFACTURER. ALUMINUM GAUGE, COATING AND COLOR AS SPECIFIED.
9. CONTRACTOR SHALL POWER WASH, SCRAPE AND STAIN ALL EXPOSED WOOD SURFACES PERTAINING TO THE ROOF AND BEAMS (EXPOSED SOFFIT, UNDERSIDE OF PAVILION ROOF, TRIM BOARDS). OWNER TO SELECT COLOR AT TIME OF CONSTRUCTION.
10. VERIFY IN FIELD SOIL STACK LOCATION.
11. CONTRACTOR SHALL CLEAN WORK AREA AND PROPERLY DISPOSE OF ALL DEBRIS AT THE END OF EACH DAY.
12. ALL NEW SLAB WORK SHALL SLOPE DOWN AND AWAY FROM SHELTER BUILDING TO ENSURE NO PONDING OF WATER UNDER SHELTER.
13. EXTERMINATE CARPENTER ANT NESTS PRIOR TO APPLYING NEW STAIN TO WOOD AND SHINGLES TO ROOF.

DEMOLITION NOTES

§3303.1 MBC 2015 DEMOLITION

§3303.1 CONSTRUCTION DOCUMENTS. A SCHEDULE FOR DEMOLITION SHALL BE SUBMITTED WHERE REQUIRED BY THE BUILDING OFFICIAL. WHERE SUCH INFORMATION IS REQUIRED, NO WORK SHALL BE DONE UNTIL SUCH CONSTRUCTION DOCUMENTS OR SCHEDULE, OR BOTH, ARE APPROVED.

§3303.2 PEDESTRIAN PROTECTION. THE WORK OF DEMOLISHING THE EXISTING ROOF SHALL NOT BE COMMENCED UNTIL PEDESTRIAN PROTECTION IS IN PLACE.

GENERAL NOTES FOR DEMOLITION:

1. FIELD VERIFY ALL EXISTING CONDITIONS AND DIMENSIONS. IF FIELD CONDITIONS ARE NOT AS SHOWN ON PLAN, CONTACT THE PROJECT ARCHITECT OR ENGINEER IMMEDIATELY PRIOR TO PROCEEDING WITH ANY WORK.
2. PROVIDE APPROPRIATE BARRICADES, SIGNAGE, AND OTHER SAFETY PRECAUTIONS SO AS TO PROTECT VISITORS, TRADESMEN, AND EXISTING REMAINING CONDITIONS.
3. COMPLETELY REMOVE ALL WORK AND RELATED WORK IN AREAS DESIGNATED ON THE PLAN.
4. ALL WORK TO BE COMPLETED BY APPROPRIATE, EXPERIENCED TRADES (I.E. ELECTRICAL DEMOLITION BY ELECTRICIANS, ETC.).
5. RESTORE EXISTING AREAS WHICH ARE DAMAGED DURING DEMOLITION. MATCH EXISTING MATERIALS, AND FINISHES.
6. DO NOT USE EXPLOSIVES OR UNSAFE DEMOLITION METHODS.
7. REMOVE ALL DEBRIS FROM THE SITE. DO NOT BURN REFUSE ON SITE. MATERIAL TO BE TRANSPOSED TO AN APPROVED DISPOSAL SITE. COORDINATE SALVAGEABLE ITEMS WITH THE OWNER. STORE SALVAGEABLE ITEMS WITHIN DESIGNATED AREAS.
8. THE CONTRACTOR SHALL PROVIDE PROPER SHORING AND BRACING WHERE NEEDED.
9. ANY AREAS WITH LEAD PAINT WILL NOT BE ABRADED, CUT, OR IGNITED TO REDUCE POTENTIAL HARMFUL IMPACT TO WORKERS.
10. ARCHITECT/ENGINEER IS NOT RESPONSIBLE FOR THE LOCATIONS OF EXISTING UTILITIES/FIXTURES AS SHOWN ON PLANS. DISCREPANCIES IN LOCATION, SIZE, AND MATERIAL ARE LIKELY TO EXIST.

BY	MARK	REVISIONS	DATE

THE WORK REPRESENTED BY THIS DRAWING WAS DESIGNED BY THE ENGINEER FOR THIS SPECIFIC APPLICATION AND SPECIFIC LOCATION DESCRIBED HEREIN IN ACCORDANCE WITH THE CONDITIONS PREVALENT AT THE TIME THE DESIGN WAS DONE. THE ENGINEER DOES NOT GUARANTEE AND WILL NOT BE LIABLE FOR ANY OTHER LOCATION, CONDITION, DESIGN OR PURPOSE.

YPSILANTI TOWNSHIP ARPA PARKS PROJECT
YPSILANTI, MI

FORD LAKE PARK
SHELTER 1 PLANS

SAGINAW OFFICE
230 S. Washington Ave.
Saginaw, MI 48607
Tel. 989-754-4717
Fax. 989-754-4460
www.SpicerGroup.com

DE. BY: NJS/LTP	CH. BY: DWM	PROJECT NO.	
DR. BY: NJS/LTP	APP. BY: DWM	134586SG2023	
STDS.		SHEET 5 OF 9	A
DATE AUGUST, 2023		FILE NO.	2.0
SCALE 1/4" = 1'-0"		DA-1472-05	

PLOTTING SCALE: 1:1
PLOT FILE: ACAD FILE:
REF: FB: PC:

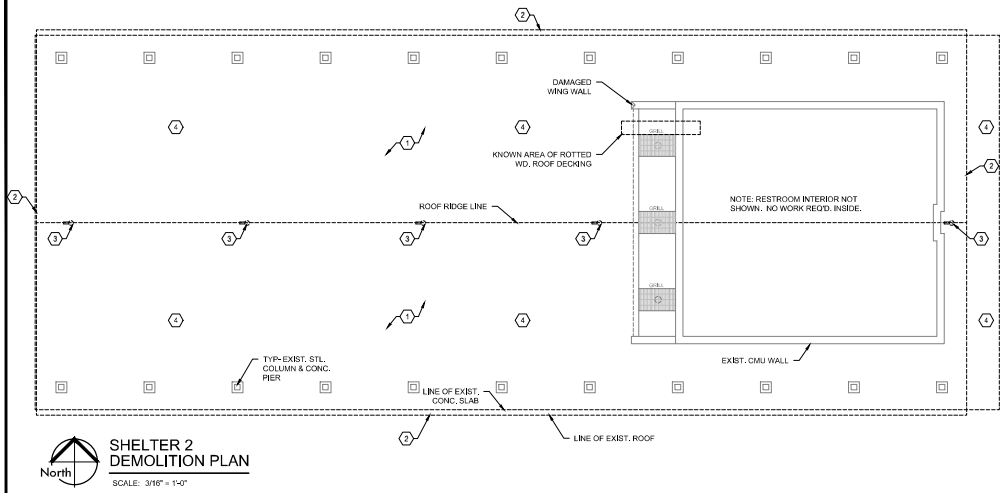

North

SHELTER 2 DEMOLITION PLAN

SCALE: 3/16" = 1'-0"

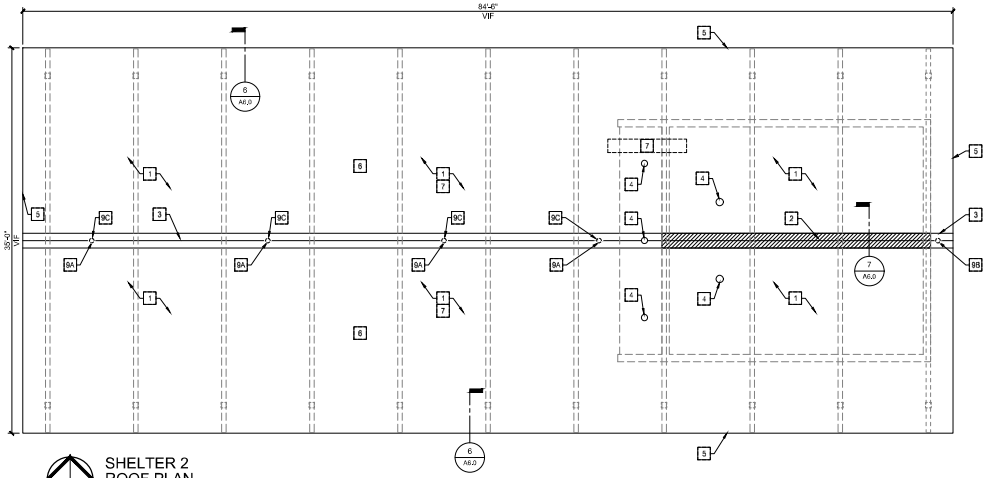

North

SHELTER 2 ROOF PLAN

SCALE: 3/16" = 1'-0"

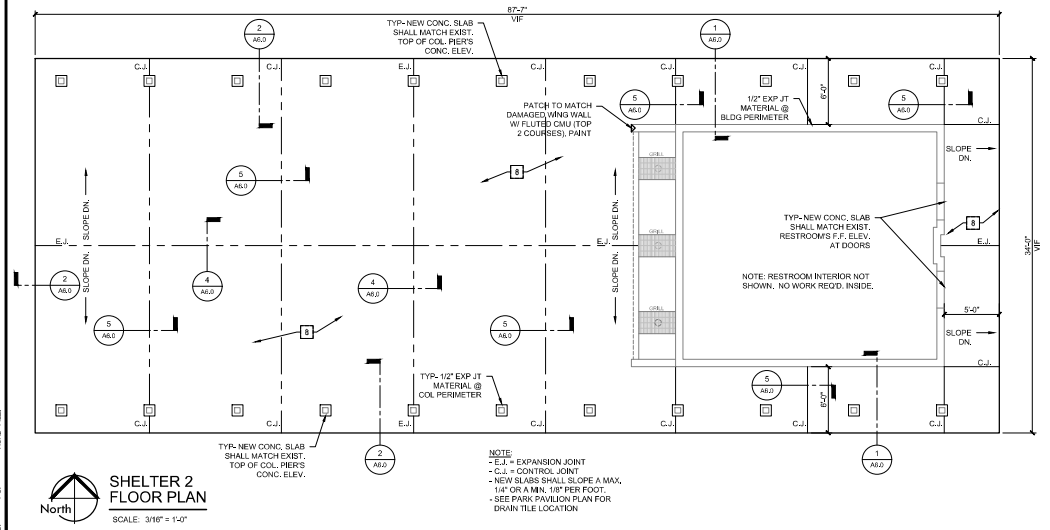

NOTE:
- E.J. = EXPANSION JOINT
- C.J. = CONTROL JOINT
- NEW SLABS SHALL SLOPE A MAX. 1/4" OR A MIN. 1/8" PER FOOT.
- SEE PARK PAVILION PLAN FOR DRAIN TILE LOCATION

North

SHELTER 2 FLOOR PLAN

SCALE: 3/16" = 1'-0"

PROPOSED KEYED NOTES:

1. NEW ASPHALT SHINGLES ON ICE & WATER SHIELD & NEW METAL DRIP EDGE
2. NEW VENTED RIDGE CAP WITH SHINGLES
3. NEW RIDGE CAP SHINGLES
4. NEW FLASH/ BOOT EXIST. SOILS STACKS PER MANUF. RECOMMENDATIONS
5. NEW 1X6 CEDAR WOOD FASCIA
6. POWER WASH, SCRAPE AND STAIN ALL EXPOSED WOOD SURFACES ON THE UNDERSIDE OF ROOF INCLUDING BEAMS
7. REPAIR/ REPLACE ROOF DECKING - CONTRACTOR TO FIELD VERIFY EXISTING DECKING CONDITION & REPLACE AS REQUIRED
8. NEW CONCRETE SLAB W/ 24" RAT WALLS
9A. NEW 4" DIAMETER SURFACE MNTD. LED DOWNLIGHT CYLINDER LIGHT FIXTURE w/ BLACK FINISH, TRIAC/ELV DIMMING, & 4"x4-1/2" OCTAGONAL CONDUIT JUNCTION BOX COVER BASED ON: ALPHABET #BETA4-SW-20LM-30K-HE70-BK-BK-S-ICOV-S-120-ELV1
NOTE: INCLUDE NEW EXPOSED BOXES AND CONDUITS WITH NEW BRANCH CIRCUITRY (WIRING) AS REQ'IRED (VIF). PAINT ALL NEW EXPOSED BOXES AND CONDUITS BLACK.
9B. NEW IP66 LED WALL PACK LIGHT FIXTURE w/ INTEGRAL PHOTOCELL AND FIELD SWITCHABLE CCT (3000K) AND LUMENS (FIELD VERIFY) BASED ON: LITHONIA #WPX0-LED-ALO-SWW2-MVOLT-PE-DDXD-M2
9C. INCLUDE NEW 6"x6" TREATED WOOD BLOCKING STAINED TO MATCH ADJACENT CEILING TO PROVIDE LEVEL MOUNTING SURFACE FOR NEW ELECTRICAL JUNCTION BOX AND LIGHT FIXTURE. PAINT ALL NEW CONDUIT AND BOXES BLACK PRIOR TO INSTALLATION.

DEMO KEYED NOTES:

1. REMOVE EXISTING ROOFING DOWN TO EXISTING WOOD DECKING. REPLACE ANY ROTTED DECKING TO MATCH.
2. REMOVE EXISTING FASCIA
3. REMOVE EXISTING LIGHT FIXTURE AND ASSOCIATED EXISTING EXPOSED BOXES AND EXPOSED CONDUITS AS REQUIRED.
4. REMOVE ENTIRE CONCRETE SLAB

NEW CONSTRUCTION NOTES

1. ALL WORK SHALL CONFORM TO THE APPLICABLE BUILDING AND ELECTRICAL CODES IN EFFECT AT THE TIME OF CONSTRUCTION.
2. ALL WORK SHALL BE COMPLETED TO CUSTOMARY INDUSTRY STANDARDS.
3. CONTRACTOR SHALL INSPECT EXISTING DECK THOROUGHLY AFTER SHINGLE REMOVAL AND REPAIR ANY DAMAGED AREAS. NOTIFY ARCHITECT IMMEDIATELY IF ANY DAMAGE IS FOUND.
4. CONTRACTOR SHALL PROVIDE A SQUARE FOOT COST FOR ROOF DECK REPLACEMENT IN THEIR BID.
5. CONTRACTOR SHALL NOT LEAVE ROOF UN-COVERED OVER NIGHT OR IN THE EVENT OF INCLEMENT WEATHER.
6. ALL ROOFING PRODUCTS SHALL COMPLY WITH THE SPECIFICATIONS.
7. APPLY SELF-SEALING SELF- ADHERING LEAK BARRIER OVER ENTIRE ROOF SURFACE PRIOR TO INSTALLATION OF SHINGLE ROOFING.
8. DRIP EDGE AND ALL OTHER ROOF ACCESSORIES SHALL BE ALUMINUM AND PROVIDED BY A SINGLE MANUFACTURER. ALUMINUM GAUGE, COATING AND COLOR AS SPECIFIED.
9. CONTRACTOR SHALL POWER WASH, SCRAPE AND STAIN ALL EXPOSED WOOD SURFACES PERTAINING TO THE ROOF AND BEAMS (EXPOSED SOFFIT, UNDERSIDE OF PAVILION ROOF, TRIM BOARDS). OWNER TO SELECT COLOR AT TIME OF CONSTRUCTION.
10. VERIFY IN FIELD SOIL STACK LOCATION.
11. CONTRACTOR SHALL CLEAN WORK AREA AND PROPERLY DISPOSE OF ALL DEBRIS AT THE END OF EACH DAY.
12. ALL NEW SLAB WORK SHALL SLOPE DOWN AND AWAY FROM SHELTER BUILDING TO ENSURE NO PONDING OF WATER UNDER SHELTER.
13. EXTERMINATE CARPENTER ANT NESTS PRIOR TO APPLYING NEW STAIN TO WOOD AND SHINGLES ON ROOF.

DEMOLITION NOTES

§3303.1 MBC 2015 DEMOLITION

§3303.1 CONSTRUCTION DOCUMENTS. A SCHEDULE FOR DEMOLITION SHALL BE SUBMITTED WHERE REQUIRED BY THE BUILDING OFFICIAL. WHERE SUCH INFORMATION IS REQUIRED, NO WORK SHALL BE DONE UNTIL SUCH CONSTRUCTION DOCUMENTS OR SCHEDULE, OR BOTH, ARE APPROVED.

§3303.2 PEDESTRIAN PROTECTION. THE WORK OF DEMOLISHING THE EXISTING ROOF SHALL NOT BE COMMENCED UNTIL PEDESTRIAN PROTECTION IS IN PLACE.

GENERAL NOTES FOR DEMOLITION:

1. FIELD VERIFY ALL EXISTING CONDITIONS AND DIMENSIONS. IF FIELD CONDITIONS ARE NOT AS SHOWN ON PLAN, CONTACT THE PROJECT ARCHITECT OR ENGINEER IMMEDIATELY PRIOR TO PROCEEDING WITH ANY WORK.
2. PROVIDE APPROPRIATE BARRICADES, SIGNAGE, AND OTHER SAFETY PRECAUTIONS SO AS TO PROTECT VISITORS, TRADESMEN, AND EXISTING REMAINING CONDITIONS.
3. COMPLETELY REMOVE ALL WORK AND RELATED WORK IN AREAS DESIGNATED ON THE PLAN.
4. ALL WORK TO BE COMPLETED BY APPROPRIATE, EXPERIENCED TRADES (I.E. ELECTRICAL DEMOLITION BY ELECTRICIANS, ETC.).
5. RESTORE EXISTING AREAS WHICH ARE DAMAGED DURING DEMOLITION. MATCH EXISTING MATERIALS, AND FINISHES.
6. DO NOT USE EXPLOSIVES OR UNSAFE DEMOLITION METHODS.
7. REMOVE ALL DEBRIS FROM THE SITE. DO NOT BURN REFUSE ON SITE. MATERIAL TO BE TRANSPOSED TO AN APPROVED DISPOSAL SITE. COORDINATE SALVAGEABLE ITEMS WITH THE OWNER, STORE SALVAGEABLE ITEMS WITHIN DESIGNATED AREAS.
8. THE CONTRACTOR SHALL PROVIDE PROPER SHORING AND BRACING WHERE NEEDED.
9. ANY AREAS WITH LEAD PAINT WILL NOT BE ABRADED, CUT, OR IGNITED TO REDUCE POTENTIAL HARMFUL IMPACT TO WORKERS.
10. ARCHITECT/ENGINEER IS NOT RESPONSIBLE FOR THE LOCATIONS OF EXISTING UTILITIES/FIXTURES AS SHOWN ON PLANS. DISCREPANCIES IN LOCATION, SIZE, AND MATERIAL ARE LIKELY TO EXIST.

BY	MARK	REVISIONS	DATE

THE WORK REPRESENTED BY THIS DRAWING WAS DESIGNED BY THE ENGINEER FOR THIS SPECIFIC APPLICATION AND SPECIFIC LOCATION DESCRIBED HEREIN IN ACCORDANCE WITH THE CONDITIONS PREVALENT AT THE TIME THE DESIGN WAS DONE. THE ENGINEER DOES NOT GUARANTEE AND WILL NOT BE LIABLE FOR ANY OTHER LOCATION, CONDITION, DESIGN OR PURPOSE.

YPSILANTI TOWNSHIP ARPA PARKS PROJECT
YPSILANTI, MI

FORD LAKE PARK
SHELTER 2 PLANS

SAGINAW OFFICE
230 S. Washington Ave.
Saginaw, MI 48607
Tel. 989-754-4717
Fax. 989-754-4460
www.SpicerGroup.com

DE. BY: NJS	CH. BY: DWM	PROJECT NO.	
DR. BY: NJS	APP. BY: DWM	134586SG2023	
STDS.	SHEET 6 OF 9	A	
DATE AUGUST, 2023	FILE NO.	3.0	
SCALE 3/16" = 1'-0"	DA-1472-06		

PLOTTING SCALE: 1:1
PLOT FILE: ACAD FILE:

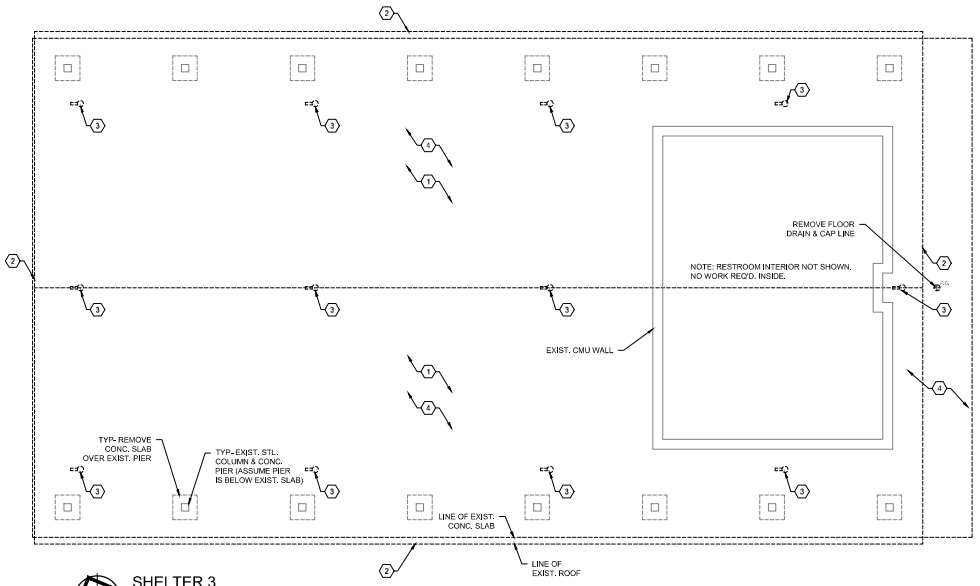

North

SHELTER 3 DEMOLITION PLAN

SCALE: 1/4" = 1'-0"

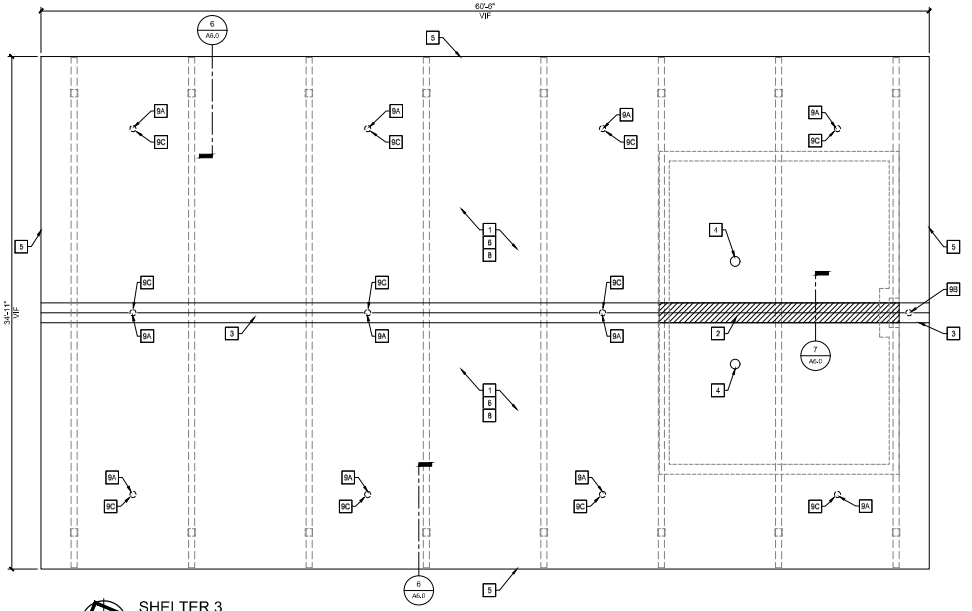

North

SHELTER 3 ROOF PLAN

SCALE: 1/4" = 1'-0"

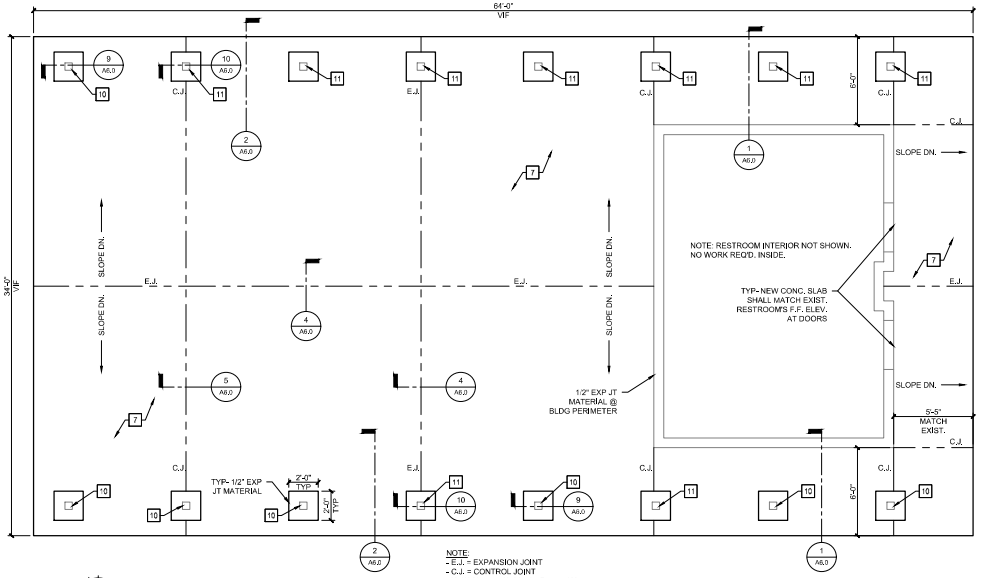

North

SHELTER 3 FLOOR PLAN

SCALE: 1/4" = 1'-0"

NOTE:
- E.J. = EXPANSION JOINT
- C.J. = CONTROL JOINT
- NEW SLABS SHALL SLOPE A MAX. 1/4" OR A MIN. 1/8" PER FOOT.
- SEE PARK PAVILION PLAN FOR DRAIN TILE LOCATION

PROPOSED KEYED NOTES:

1. NEW ASPHALT SHINGLES ON ICE & WATER SHIELD & NEW METAL DRIP EDGE
2. NEW VENTED RIDGE CAP WITH SHINGLES
3. NEW RIDGE CAP SHINGLES
4. FLASH/ BOOT EXISTING SOILS STACKS PER MANUFACTURER RECOMMENDATIONS
5. NEW 1X6 CEDAR WOOD FASCIA
6. REPAIR / REPLACE ROOF DECKING - CONTRACTOR TO FIELD VERIFY EXISTING DECKING CONDITION & REPLACE AS REQUIRED
7. NEW CONCRETE SLAB W/ 24" RAT WALLS
8. POWER WASH, SCRAPE & STAIN ALL EXPOSED WOOD SURFACES ON THE UNDERSIDE OF ROOF INCLUDING BEAMS
9A. NEW 4" DIAMETER SURFACE MNTD. LED DOWNLIGHT CYLINDER LIGHT FIXTURE w/ BLACK FINISH, TRIAC/ELV DIMMING, & 4"x1-1/2" OCTAGONAL CONDUIT JUNCTION BOX COVER BASED ON: ALPHABET #BETA-6-SW-20LM-30K-HE7I-SC-DC-S-ICOV-S-120-ELV1
   NOTE: INCLUDE NEW EXPOSED BOXES AND CONDUITS WITH NEW BRANCH CIRCUITRY (WIRING) AS REQUIRED (VIF). PAINT ALL NEW EXPOSED BOXES AND CONDUITS BLACK.
9B. NEW IP66 LED WALL PACK LIGHT FIXTURE w/ INTEGRAL PHOTOCELL AND FIELD SWITCHABLE CCT (3000K) AND LUMENS (FIELD VERIFY) BASED ON: LITHONIA #WPX0-LED-ALO-SWW2-MVOLT-PE-DDXD-M2
9C. INCLUDE NEW 6"x6" TREATED WOOD BLOCKING STAINED TO MATCH ADJACENT CEILING TO PROVIDE LEVEL MOUNTING SURFACE FOR NEW ELECTRICAL JUNCTION BOX AND LIGHT FIXTURE. PAINT ALL NEW CONDUIT AND BOXES BLACK PRIOR TO INSTALLATION.
10. REPAIR STEEL COLUMN BASE AT PIER (7 TOTAL). SEE DETAIL SHEET
11. REPAIR STEEL COLUMN BASE AT PIER & REPLACE PORTION OF STEEL COLUMN (9 TOTAL), SEE DETAIL SHEET

DEMO KEYED NOTES:

1. REMOVE EXISTING ROOFING DOWN TO EXISTING WOOD DECKING. REPLACE ANY ROTTED DECKING TO MATCH.
2. REMOVE EXISTING FASCIA
3. REMOVE EXISTING LIGHT FIXTURE AND ASSOCIATED EXISTING EXPOSED BOXES AND EXPOSED CONDUITS AS REQUIRED.
4. REMOVE ENTIRE CONCRETE SLAB

NEW CONSTRUCTION NOTES

1. ALL WORK SHALL CONFORM TO THE APPLICABLE BUILDING AND ELECTRICAL CODES IN EFFECT AT THE TIME OF CONSTRUCTION.
2. ALL WORK SHALL BE COMPLETED TO CUSTOMARY INDUSTRY STANDARDS.
3. CONTRACTOR SHALL INSPECT EXISTING DECK THOROUGHLY AFTER SHINGLE REMOVAL AND REPAIR ANY DAMAGED AREAS. NOTIFY ARCHITECT IMMEDIATELY IF ANY DAMAGE IS FOUND.
4. CONTRACTOR SHALL PROVIDE A SQUARE FOOT COST FOR ROOF DECK REPLACEMENT IN THEIR BID.
5. CONTRACTOR SHALL NOT LEAVE ROOF UN-COVERED OVER NIGHT OR IN THE EVENT OF INCLEMENT WEATHER.
6. ALL ROOFING PRODUCTS SHALL COMPLY WITH THE SPECIFICATIONS.
7. APPLY SELF-SEALING SELF- ADHERING LEAK BARRIER OVER ENTIRE ROOF SURFACE PRIOR TO INSTALLATION OF SHINGLE ROOFING.
8. DRIP EDGE AND ALL OTHER ROOF ACCESSORIES SHALL BE ALUMINUM AND PROVIDED BY A SINGLE MANUFACTURER. ALUMINUM GAUGE, COATING AND COLOR AS SPECIFIED.
9. CONTRACTOR SHALL POWER WASH, SCRAPE AND STAIN ALL EXPOSED WOOD SURFACES PERTAINING TO THE ROOF AND BEAMS (EXPOSED SOFFIT, UNDERSIDE OF PAVILION ROOF. TRIM BOARDS). OWNER TO SELECT COLOR AT TIME OF CONSTRUCTION.
10. VERIFY IN FIELD SOIL STACK LOCATION.
11. CONTRACTOR SHALL CLEAN WORK AREA AND PROPERLY DISPOSE OF ALL DEBRIS AT THE END OF EACH DAY.
12. ALL NEW SLAB WORK SHALL SLOPE DOWN AND AWAY FROM SHELTER BUILDING TO ENSURE NO PONDING OF WATER UNDER SHELTER.
13. EXTERMINATE CARPENTER ANT NESTS PRIOR TO APPLYING NEW STAIN TO WOOD AND SHINGLES TO ROOF.

DEMOLITION NOTES

§3303.1 MBC 2015 DEMOLITION

§3303.1 CONSTRUCTION DOCUMENTS. A SCHEDULE FOR DEMOLITION SHALL BE SUBMITTED WHERE REQUIRED BY THE BUILDING OFFICIAL. WHERE SUCH INFORMATION IS REQUIRED, NO WORK SHALL BE DONE UNTIL SUCH CONSTRUCTION DOCUMENTS OR SCHEDULE, OR BOTH, ARE APPROVED.

§3303.2 PEDESTRIAN PROTECTION. THE WORK OF DEMOLISHING THE EXISTING ROOF SHALL NOT BE COMMENCED UNTIL PEDESTRIAN PROTECTION IS IN PLACE.

GENERAL NOTES FOR DEMOLITION:

1. FIELD VERIFY ALL EXISTING CONDITIONS AND DIMENSIONS. IF FIELD CONDITIONS ARE NOT AS SHOWN ON PLAN, CONTACT THE PROJECT ARCHITECT OR ENGINEER IMMEDIATELY PRIOR TO PROCEEDING WITH ANY WORK.
2. PROVIDE APPROPRIATE BARRICADES, SIGNAGE, AND OTHER SAFETY PRECAUTIONS SO AS TO PROTECT VISITORS, TRADESMEN, AND EXISTING REMAINING CONDITIONS.
3. COMPLETELY REMOVE ALL WORK AND RELATED WORK IN AREAS DESIGNATED ON THE PLAN.
4. ALL WORK TO BE COMPLETED BY APPROPRIATE, EXPERIENCED TRADES (I.E. ELECTRICAL DEMOLITION BY ELECTRICIANS, ETC.).
5. RESTORE EXISTING AREAS WHICH ARE DAMAGED DURING DEMOLITION. MATCH EXISTING MATERIALS, AND FINISHES.
6. DO NOT USE EXPLOSIVES OR UNSAFE DEMOLITION METHODS.
7. REMOVE ALL DEBRIS FROM THE SITE. DO NOT BURN REFUSE ON SITE. MATERIAL TO BE TRANSPOSED TO AN APPROVED DISPOSAL SITE. COORDINATE SALVAGEABLE ITEMS WITH THE OWNER. STORE SALVAGEABLE ITEMS WITHIN DESIGNATED AREAS.
8. THE CONTRACTOR SHALL PROVIDE PROPER SHORING AND BRACING WHERE NEEDED.
9. ANY AREAS WITH LEAD PAINT WILL NOT BE ABRADED, CUT, OR IGNITED TO REDUCE POTENTIAL HARMFUL IMPACT TO WORKERS.
10. ARCHITECT/ENGINEER IS NOT RESPONSIBLE FOR THE LOCATIONS OF EXISTING UTILITIES/FIXTURES AS SHOWN ON PLANS. DISCREPANCIES IN LOCATION, SIZE,AND MATERIAL ARE LIKELY TO EXIST.

BY	MARK	REVISIONS	DATE

THE WORK REPRESENTED BY THIS DRAWING WAS DESIGNED BY THE ENGINEER FOR THIS SPECIFIC APPLICATION AND SPECIFIC LOCATION DESCRIBED HEREIN IN ACCORDANCE WITH THE CONDITIONS PREVALENT AT THE TIME THE DESIGN WAS DONE. THE ENGINEER DOES NOT GUARANTEE AND WILL NOT BE LIABLE FOR ANY OTHER LOCATION, CONDITION, DESIGN OR PURPOSE.

YPSILANTI TOWNSHIP ARPA PARKS PROJECT
YPSILANTI, MI

FOR LAKE PARK
SHELTER 3 PLANS

SAGINAW OFFICE
230 S. Washington Ave.
Saginaw, MI 48607
Tel. 989-754-4717
Fax. 989-754-4460
www.SpicerGroup.com

DE. BY: NJS	CH. BY: DWM	PROJECT NO.	
DR. BY: NJS	APP. BY: DWM	134586SG2023	
STDS.	SHEET 7 OF 9	A	
DATE AUGUST, 2023	FILE NO.	4.0	
SCALE 1/4" = 1'-0"	DA-1472-07		

PLOTTING SCALE: 1:1
ACAD FILE:
PC:
PE:
RET:
PB:

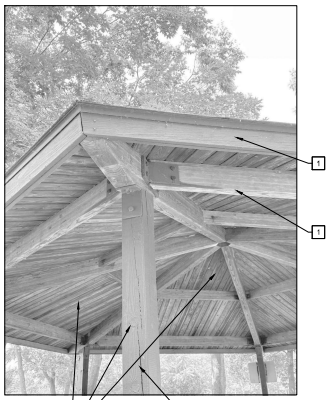

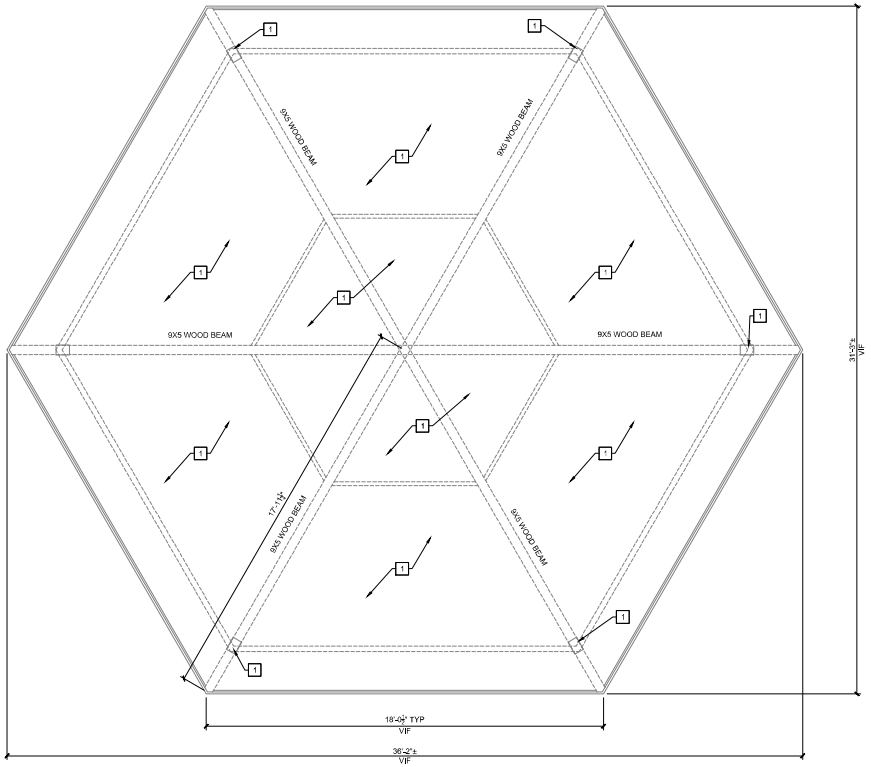

North

SHELTER 4 CEILING PLAN

SCALE: 3/8" = 1'-0"

PROPOSED KEYED NOTES:

1 NEW WOOD STAIN. CLEAN WITH TSP AND STAIN WHEN DRY PER MANUFACTURER DIRECTIONS.

NEW CONSTRUCTION NOTES

1. ALL WORK SHALL CONFORM TO THE APPLICABLE BUILDING CODE IN EFFECT AT THE TIME OF CONSTRUCTION.
2. ALL WORK SHALL BE COMPLETED TO CUSTOMARY INDUSTRY STANDARDS.
3. CONTRACTOR SHALL POWER WASH, SCRAPE AND STAIN ALL EXPOSED WOOD SURFACES PERTAINING TO THE ROOF (EXPOSED SOFFIT, UNDERSIDE OF PAVILION ROOF, TRIM BOARDS), OWNER TO SELECT COLOR AT TIME OF CONSTRUCTION.
4. CONTRACTOR SHALL CLEAN WORK AREA AND PROPERLY DISPOSE OF ALL DEBRIS AT THE END OF EACH DAY.
5. CONTRACTOR TO VERIFY IN FIELD NOTED DIMENSIONS.

BY	MARK	REVISIONS	DATE

THE WORK REPRESENTED BY THIS DRAWING WAS DESIGNED BY THE ENGINEER FOR THIS SPECIFIC APPLICATION AND SPECIFIC LOCATION DESCRIBED HEREON IN ACCORDANCE WITH THE CONDITIONS PREVALENT AT THE TIME THE DESIGN WAS DONE. THE ENGINEER DOES NOT GUARANTEE AND WILL NOT BE LIABLE FOR ANY OTHER LOCATION, CONDITION, DESIGN OR PURPOSE.

YPSILANTI TOWNSHIP ARPA PARKS PROJECT
YPSILANTI, MI

FORD LAKE PARK SHELTER 4 PLANS

SAGINAW OFFICE
230 S. Washington Ave.
Saginaw, MI 48607
Tel. 989-754-4717
Fax. 989-754-4440
www.SpicerGroup.com

DE. BY: NJS	CH. BY: DWM	PROJECT NO.	
DR. BY: NJS	APP. BY: DWM	134586SG2023	
STDS.		SHEET 8 OF 9	A
DATE AUGUST, 2023		FILE NO.	5.0
SCALE 3/8" = 1'-0"		DA-1472-08	

PLOTTING SCALE: RET. F.B. PG. ACAD FILE:

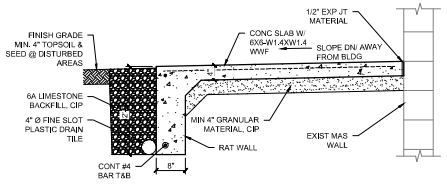

1 A6.0 **SECTION**

SCALE: 3/4" = 1'-0"

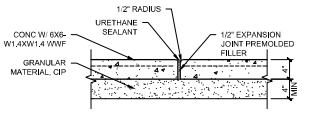

4 A6.0 **TYP. CONC. SLAB EXPANSION JOINT DETAIL**

SCALE: 1" = 1'-0"

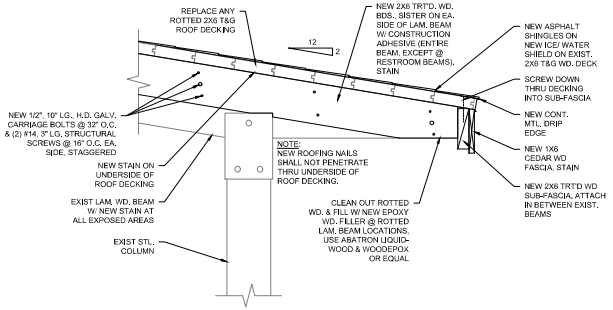

6 A6.0 **SECTION**

SCALE: 1-1/2" = 1'-0"

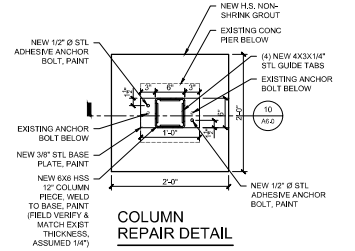

COLUMN REPAIR DETAIL

SCALE: 1" = 1'-0"

NOTE: THIS DETAIL CORRESPONDS TO KEY NOTE 11, SEE FLOOR PLAN FOR SHELTER 3.

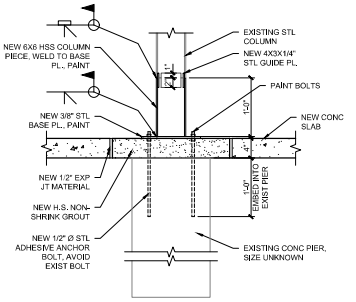

10 A6.0 **SECTION**

SCALE: 1-1/2" = 1'-0"

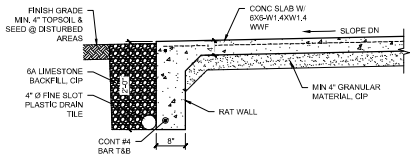

2 A6.0 **SECTION**

SCALE: 3/4" = 1'-0"

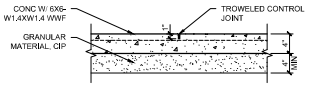

5 A6.0 **TYP. CONC. SLAB CONTROL JOINT DETAIL**

SCALE: 1" = 1'-0"

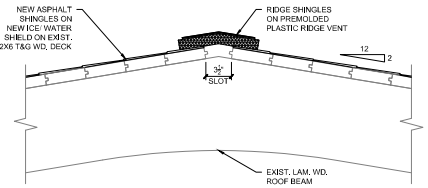

7 A6.0 **RIDGE VENT DETAIL**

SCALE: 1-1/2" = 1'-0"

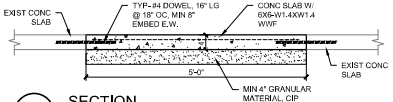

3 A6.0 **SECTION**

SCALE: 3/4" = 1'-0"

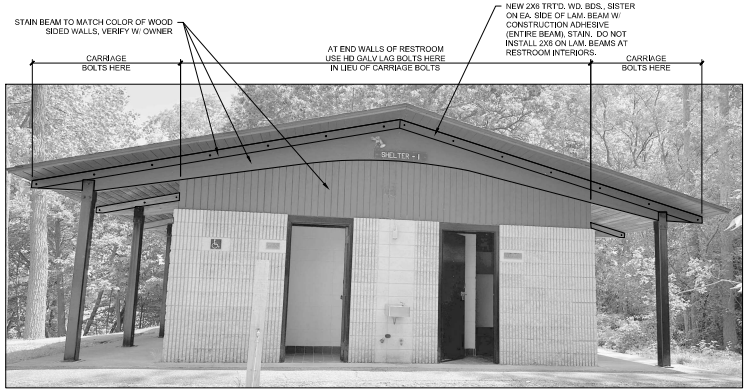

TYP. SHELTER GABLE END @ RESTROOMS

SCALE: NONE

NOTE: THE LOOK OF THE GABLE ENDS AT RESTROOMS DO DIFFER FROM SHELTER TO SHELTER BUT COLOR WILL BE THE SAME.

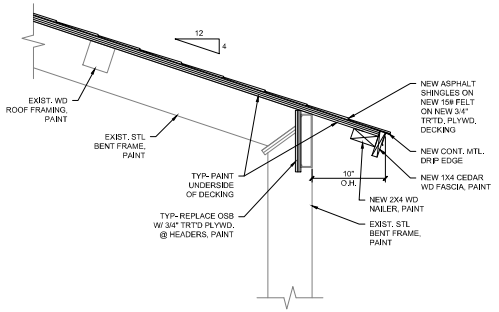

8 A6.0 **ROOF OVERHANG SECTION AT NEW FASCIA**

SCALE: 1-1/2" = 1'-0"

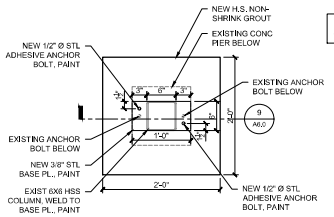

COLUMN REPAIR DETAIL

SCALE: 1" = 1'-0"

NOTE: CONTRACTOR SHALL BE RESPONSIBLE FOR PROPER SHORING OF SHELTER STRUCTURE DURING COLUMN REPAIRS.

NOTE: THIS DETAIL CORRESPONDS TO KEY NOTE 10, SEE FLOOR PLAN FOR SHELTER 3.

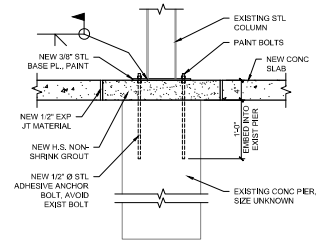

9 A6.0 **SECTION**

SCALE: 1-1/2" = 1'-0"

BY:	MARK	REVISIONS	DATE

THE WORK REPRESENTED BY THIS DRAWING WAS DESIGNED BY THE ENGINEER FOR THIS SPECIFIC APPLICATION AND SPECIFIC LOCATION DESCRIBED HEREIN IN ACCORDANCE WITH THE CONDITIONS PREVAILENT AT THE TIME THE DESIGN WAS DONE. THE ENGINEER DOES NOT GUARANTEE AND WILL NOT BE LIABLE FOR ANY OTHER LOCATION, CONDITION, DESIGN OR PURPOSE.

YPSILANTI TOWNSHIP ARPA PARKS PROJECT
YPSILANTI, MI

DETAILS

SAGINAW OFFICE
230 S. Washington Ave.
Saginaw, MI 48607
Tel. 989-754-4717
Fax. 989-754-4440
www.SpicerGroup.com

DE. BY: DWM	CH. BY: DWM	PROJECT NO.	
DR. BY: LTP	APP. BY: DWM	134586SG2023	
STDS.		SHEET 9 OF 9	A
DATE AUGUST, 2023		FILE NO.	6.0
SCALE AS SHOWN		DA-1472-09	

PLOTTED BY: PEL PLOTTING SCALE: 1:1 PLOT DATE: 8/30/2023 10:08:15 AM - Phillip Lord
RET. PEL ACAD FILE:

Township Supervisor
Brenda L. Stumbo
Township Clerk
Heather Jarrell Roe
Township Treasurer
Stan Eldridge

YPSILANTI TOWNSHIP
— OFFICE OF THE SUPERVISOR —

Trustees
Ryan Hunter
John Newman II
Gloria Peterson
Debbie Swanson

MEMORANDUM

To: Charter Township of Ypsilanti Board of Trustees

From: Brenda Stumbo, Township Supervisor

Date: August 10, 2023

RE: Request to authorize OHM to solicit bids for the Ridge Road sidewalk project

At the February 7, 2023 meeting, the Board of Trustees authorized OHM to perform Professional Engineering Design Services for the installation of new sidewalk on Ridge Road to make the non-motorized path continuous and compliant with ADA standards. This will also allow AAATA to install a bus shelter. Also approved at the April 18, 2023 meeting was for DTE to install lighting on Ridge Road.

The contract book, plans, and estimate for the project are attached. The next step is for OHM to bid out the construction, estimated to be $420,768.81. The bidding is planned for late August, and OHM will bring back a recommendation to the September 19, 2023 meeting. The contractor will then choose to do the project late fall this year or spring of 2024.

Thank you for your consideration.

CONTRACT DOCUMENTS
FOR
RIDGE ROAD SIDEWALK

CHARTER TOWNSHIP
OF YPSILANTI
YPSILANTI MI 48197

OHM Advisors
34000 Plymouth Road
Livonia, Michigan 48150

0098-23-0020
August 22, 2023

Ridge Road Sidewalk
Charter Township of Ypsilanti
0098-23-0020
TABLE OF CONTENTS

Page No.

Bidding Requirements

Advertisement for Bid AB-1
Instructions to Bidders IB-1-3
Supplemental Instructions to Bidders SIB-1-3
Insurance Specifications IS-1-4
Bid Form BF-1-7
Bid Guarantee BG-1
Bid Bond BB–1-3
Statement of Qualifications SQ-1-3
Subcontractor Listing SL-1-2
Iran Linked Business Certification IL-1-2

Contract Forms

Agreement *(Contract)* AG-1-6
Performance Bond PFB-1-4
Payment Bond PYB-1-3
Maintenance and Guarantee Bond MG-1-2
Contractor's Affidavit CA-1
Contractor's Declaration CD-1
Sworn Statement SW-1-2

Conditions of the Contract

General Conditions GC-1-20

General Specifications

General Specifications GS-1-6

Technical Specifications

Earthwork EA-1-9
Digital Recorded Video Survey DV-1-4
Restoration R-1-8
Method of Payment MP-1-14
Supplemental Specifications SS-1-9

Appendices

Appendix A: Soil Boring Logs

ADVERTISEMENT FOR BID

Ridge Road Sidewalk
Charter Township of Ypsilanti
August 22, 2023

Sealed Bids for Ridge Road Sidewalk will be received at the office of the Charter Township of Ypsilanti until 2:00 pm local time, on September 7, 2023, by the office of the Recreation Director located at 7200 S Huron River Dr, Ypsilanti MI 48197. The approximate quantities of major items of work involved are as follows:

Construction and rehabilitation of approximately 3,000 feet of 5-foot-wide concrete sidewalk along the west side of Ridge Road, construction of a new bus stop pad at the southwest corner of Ridge Road and Clark Road, minor improvements to the existing bus stop at the northwest corner of Ridge Road and Holmes Road, and construction of a mid-block crossing on Ridge Road at Clark Road.

The issuing Office for the Bidding Documents is the office of the ENGINEER, Orchard, Hiltz, & McCliment, Inc., d/b/a OHM Advisors. Bidding documents may be examined at the following locations after August 22nd, 2023, at 12:00PM: ohm-advisors.com: OHM Advisors Plan Room (Download Fee may apply); Dodge Data & Analytics, construction.com; ConstructionConnect, projects.constructconnect.com; the Construction Association of Michigan (CAM), buildwithcam.com; MITN Purchasing Group, Bidnetdirect.com; and Charter Township of Ypsilanti, 7200 S Huron River Dr, Ypsilanti MI 48197. Neither Owner nor ENGINEER will be responsible for full or partial sets of Bidding Documents, including Addenda if any, obtained from sources other than the Issuing Office. Bidders should direct correspondence to the ENGINEER.

Copies thereof may be obtained on or after 12:00 pm, local time, August 22, 2023, at the office of the ENGINEER, Orchard, Hiltz & McCliment, Inc., 34000 Plymouth Road, Livonia, MI 48150. A fee of Fifty-five dollars ($55.00) non-refundable will be charged for each set of Contract Documents. An additional fee of Fifteen dollars ($15.00) non-refundable will be charged for each set of Contract Documents which are mailed.

Bid Security in the form of a Bid Bond for a sum no less than 5% of the amount of the Bid will be required with each Bid.

The OWNER reserves the right to accept any Bid, reject any Bid, or waive irregularities in Bids.

No Bid may be withdrawn for a period of 60 calendar days after the scheduled closing time for receipt of the Bids.

An optional virtual pre-bid meeting is scheduled for this project through zoom at: https://ohm-advisors.zoom.us/j/98509587125?pwd=UkdDcFpNMU0veDgydmFiaG83RmlBZz09 on August 29, 2023.

John Hines, Recreation Director

Charter Township of Ypsilanti

INSTRUCTIONS TO BIDDERS

1. BIDS

A. Sealed Bids will be received as per Advertisement for Bids.

B. Bid Forms shall be submitted only on forms provided by the ENGINEER and shall be of the type specified in the Bid Form.

C. Bid Forms must be completed legibly in ink or by typewriter. In case of a discrepancy between the unit price and the extended amount, the unit price shown shall govern. Illegibility of any figure or word in the Bid Form may be sufficient cause for rejection of the Bid by the OWNER.

D. Bid Forms shall be enclosed in sealed envelopes marked with the name of the project and Bidder and shall be delivered to the OWNER at the place specified in the Advertisement for Bids on or before the time specified in the Advertisement for Bids.

E. Bid Forms shall be made in full conformity with all the conditions set forth in the drawings and in these specifications

2. NAME AND STATUS OF BIDDER

A. The name and legal status of Bidder, that is, as a corporation, partnership or individual, shall be stated in the Bid Form.

B. Anyone signing a Bid Form as an agent of another or others must submit with the Bid Form legal evidence of his authority to do so.

C. The place of residence of each Bidder, or the office address in the case of a firm or company, with county and state, must be given after his signature. Phone and fax numbers are also required.

3. BID SECURITY

Each Bid must be in the form requested in the Advertisement for Bid. The CONTRACTOR shall complete and sign the Bid Guarantee form (page BG-1). If a Bid Bond is requested, it must be from a Treasury Listed surety company licensed to do business in the state of Michigan in the amount as stated in the Advertisement for Bid, payable to the OWNER as a guarantee on the part of the Bidder that he will, if called upon, enter into the attached Agreement.

4. BONDS

A. CONTRACTOR will be required to furnish performance and payment bonds each equal to one-hundred percent (100%) of the Contract Sum. The bonds shall be the OWNER's guarantee of the faithful performance and payment of all the CONTRACTOR's obligations under the Agreement. These bonds shall remain in effect for the period as stated in each bond’s provisions.

B. Maintenance and Guarantee Bonds shall be required.

5. INSPECTION OF SITE

A. Before submitting a Bid Form, each Bidder shall personally inspect the site of the proposed work to arrive at a clear understanding of the conditions under which the work is to be done.

B. Each Bidder shall be held to have compared the premises with the Bid documents and to have satisfied himself as to conditions of the premises, existing construction and any other conditions

affecting the carrying out of the work before delivery of his Bid Form.

C. No allowance or extra consideration on behalf of the CONTRACTOR will subsequently be allowed by reason of error or oversight on the part of the CONTRACTOR or on account of interference by the OWNER's or other CONTRACTOR's activities.

6. TIME OF COMPLETION

Time of completion will be as stated in the Agreement.

7. EXPLANATION TO BIDDERS BY ADDENDA

A. Neither the OWNER nor the ENGINEER will give verbal answers to inquiries regarding the meaning or intent of the Contract Documents prior to award of the Contract. Any verbal statements regarding same by any person prior to the award shall be without legal effect.

B. Explanations desired by Bidders shall be requested of the ENGINEER in writing and, if explanations are necessary, a reply will be made in the form of an addendum, a copy of which will be forwarded to each Bidder of Record whose work is affected.

C. Addenda issued to Bidders prior to date of receipt of Bid Forms shall become a part of the Contract Documents, and all Bid Forms shall include the work described in the Addenda.

D. No inquiry received within four (4) business days of the date fixed for opening of the Bids will be given consideration.

E. Failure of the ENGINEER to send, or the Bidder to receive, any such interpretations shall not relieve the Bidder from obligation under his Bid as submitted.

F. Bidder of Record is defined as an individual, partnership or corporation having purchased a set of Bid Documents from the ENGINEER.

8. EXPERIENCE AND FINANCIAL STATEMENT

A. It is the intention of the OWNER to award the Contract to a contractor fully capable, both financially and as regards to experience to perform and complete the work in a satisfactory manner. Each Bidder must complete the Statement of Qualifications, which follows the Bid Form. If required by the OWNER, each Bidder under consideration may be required to submit additional evidence of qualifications.

B. Each Bidder under consideration must be able to demonstrate that the Bidder has successfully completed projects of a similar nature and scope within the last two years.

9. SUBCONTRACTORS

Bidder shall submit to OWNER a list of all subcontractors and other persons and organizations (including those who are to furnish the principal items of material and equipment) proposed for those portions of work as to which such identification is so required. If requested by the OWNER, the apparent successful Bidder and any other Bidder so requested, will, within ten (10) days after the day of Bid opening, submit a Statement of Qualifications with pertinent information as to similar projects and other evidence of qualification for each such subcontractor, person and organization if requested by the OWNER.If the OWNER or ENGINEER, after due investigation, has reasonable objection to any proposed subcontractor, other person or organization, OWNER may request the apparent successful Bidder to submit an acceptable

substitute without an increase in Bid price. If the apparent successful Bidder declines to make any such substitutions, the Contract shall not be awarded to such Bidder, but his declining to make any such substitution will not constitute grounds for sacrificing his Bid Security. Any subcontractor, other person or organization so listed and to whom the OWNER or ENGINEER does not make written objection prior to signing of the Agreement will be deemed acceptable to the OWNER and ENGINEER.

10. AWARD OF CONTRACT

The OWNER reserves the right to accept any Bid, to reject any or all Bids, and to waive defects or irregularities in any Bid for any reason or no reason at all. The OWNER also reserves the right to award some, none, or all of the Contract.

11. LIQUIDATED DAMAGES/INCENTIVES

A. If the CONTRACTOR fails to complete all the work within the time stipulated, he will be assessed liquidated damages as set forth in the Agreement.

B. If set forth in the Agreement, incentives will be paid by OWNER to CONTRACTOR at the rate specified in the Agreement, when the work is completed prior to the time specified in the Agreement.

12. TAXES

The Bidder shall include in the base Bid and shall pay all applicable federal, state and local taxes of whatever character and description.

End of Section

SUPPLEMENTAL INSTRUCTIONS TO BIDDERS

These Supplemental Instructions to Bidders (SIB) amend or supplement the Instructions to Bidders. All provisions that are not so amended or supplemented remain in full force and effect.

A. Time of Completion & Construction Schedule

Prior to the execution of the Contract, the CONTRACTOR shall submit an outline of his proposed order of work and indicate dates for completing the major items of work. Major items shall be considered to be construction of new sidewalk, a new bus stop pad, minor improvements to an existing bus stop, and a mid-block crossing. This schedule, when approved by the OWNER, shall become part of the Contract.

A pre-construction meeting shall be arranged prior to the start of work. The CONTRACTOR shall bring a tentative schedule to the pre-construction meeting. At this time, all Contract requirements shall be reviewed.

If construction is to be completed in 2023, it is anticipated that construction will begin on October 2, 2023. If construction is to be completed in 2024, it is anticipated that construction will begin on April 15, 2024. The CONTRACTOR shall complete the proposed work, including final tests thereof, in order to have the sidewalk construction and rehabilitation finished as of the substantial completion date. Final cleanup and restoration shall be finished by the project completion date, unless otherwise directed in writing by the OWNER or its ENGINEER.

The CONTRACTOR shall submit a construction schedule to the ENGINEER for review prior to construction commencing. If the CONTRACTOR chooses to begin this work in 2024, the unit prices provided in the Bid Form shall hold for this contract.

Summary of anticipated dates – 2023:

Contract Award .....September 19, 2023

Notice to Proceed .....September 25, 2023

Construction Start Date .....October 2, 2023

Substantial Completion Days .....November 11, 2023

Project Completion.....November 27, 2023

Summary of anticipated dates – 2024:

Contract Award .....September 19, 2023

Notice to Proceed ..... April 8, 2024

Construction Start Date ..... April 15, 2024

Substantial Completion Days ..... May 17, 2024

Project Completion..... June 28, 2024

All requests for extensions of time shall be submitted in writing in accordance with Section 15 of the General Conditions. Such requests shall:

1. Detail the reason for the request.
2. Provide a realistic revised completion date.
3. Indicate any other areas that may be impacted by such an extension.

The CONTRACTOR shall request a deadline extension as soon as it has become apparent the completion date is unreasonable. In no case will a request be considered if it is submitted after the originally required completion date has passed.

B. Permits

The following permits will be required for project construction. The CONTRACTOR is required to comply with all terms and conditions of the permit as incidental to the unit prices bid and no extra compensation will be allowed.

a. Permitting Agency: Washtenaw County Road Commission

Contact at Agency: Gary Streight

Phone number: 734-761-1500

Permit Fee: Letter of Retainage (by Township)

Bond Amount (if applicable): N/A

Date of Application: _____

Person Responsible for Acquiring the Permit: Contractor

Date Permit issued if already in hand: _____

b. Permitting Agency: Washtenaw County SESC

Contact at Agency: Katie Lee

Phone number: 734-222-6860

Permit Fee: Paid by Township

Bond Amount (if applicable): Letter of Retainage (by Township)

Date of Application: _____

Person Responsible for Acquiring the Permit: Contractor

Date Permit issued if already in hand: _____

Application has been made by the Engineer for the permits identified above. Unless otherwise indicated, the CONTRACTOR must secure the permits prior to the start of construction and shall be responsible for all associated fees, deposits, bonds, proof of insurance, etc. The Contractor shall also be responsible for arranging for inspection by the governing agencies.

Work cannot proceed until all permits are obtained.

C. Pre-bid Meeting

An optional pre-bid meeting will be held via Zoom on August 29, 2023 at 10:00 am.

Join Zoom Meeting
https://ohm-advisors.zoom.us/j/98509587125?pwd=UkdDcFpNMU0veDgydmFiaG83RmlBZz09

Password: 319268

One tap mobile
+13052241968,,98509587125# US

Join by Telephone
+1 305 224 1968 US
Meeting ID: 985 0958 7125
Password: 319268

INSURANCE SPECIFICATIONS

1. LIABILITY OF CONTRACTOR

The Contractor shall take all responsibility for the work and shall provide barricades, watchmen and lights, and take all precautions for preventing injuries to persons and property on or about the work; shall bear all losses resulting to him on account of the amount or character of the work or because the nature of the ground in which the work is done is different from what was estimated or expected, or on account of weather, floods, elements or other cause; and shall assume defense of, indemnify and save harmless the party of the first part and its individual officers and agents from all claims relating to labor, equipment and materials furnished for the work, inventions, patents and patent rights used in doing the work, also to injuries to any person or property received or sustained by or from the CONTRACTOR, his agents or employees.

The mention of any specific duty or liability of the CONTRACTOR in any part of the specifications shall not be construed as a limitation or restriction upon any general liability or duty imposed upon the CONTRACTOR by the specifications.

INDEMNIFICATION - HOLD HARMLESS AGREEMENT

The CONTRACTOR agrees to indemnify, defend, and save harmless the OWNER and ENGINEER, their consultants, agents, and employees, from and against all loss or expense (including costs and attorney's fees) by reason of liability imposed by law upon the OWNER and ENGINEER, their consultants, agents, and employees for damages to property and for damages because of bodily injury, including death at any time resulting therefrom, arising out of or in consequence of the performance of this work, whether such injuries to persons or damage to property is due, or claimed to be due, to the negligence of the CONTRACTOR, his subcontractors, the OWNER, the ENGINEER, and their consultants, agents, and employees, except only such injury or damage as shall have been occasioned by the sole negligence of the OWNER, the ENGINEER, and their agents and/or consultants.

COMPOSITION OF THE CONTRACTOR

If the CONTRACTOR hereunder is comprised of more than one legal entity, each such entity shall be jointly and severally liable hereunder.

2. INSURANCE

2.1. Insurance Required of the CONTRACTOR:

Prior to commencement of work, the CONTRACTOR shall purchase and maintain during the term of the project such insurance as will protect him, the OWNER(s), and Orchard, Hiltz & McCliment, Inc., Consulting Engineers, from claims arising out of the work described in this Contract and performed by the CONTRACTOR, subcontractor(s) or sub-subcontractor(s) consisting of:

2.1.1. Workers' Compensation Insurance including Employer's Liability to cover employee injuries or disease compensable under the Workers' Compensation Statutes of the states in which work is conducted under this Contract; disability benefit laws, if any; or Federal compensation acts such as U.S. Longshoremen or Harbor Workers', Maritime Employment, or Railroad Compensation Act(s), if applicable. Self-insurance plans approved by the regulatory authorities in the state in which work on this project is performed are acceptable.

2.1.2. A Comprehensive General Liability policy to cover bodily injury to persons other than employees and for damage to tangible property including loss of use thereof, including the following exposures:

A. All premises and operations.

B. Explosion, collapse and underground damage.

C. Contractor's Protective coverage for independent contractors or subcontractors employed by him.

D. Contractual Liability for the obligation assumed in the Indemnification or Hold Harmless agreement found under Part l of this Section.

E. The usual Personal Injury Liability endorsement with no exclusions pertaining to employment.

F. Products and Completed Operations coverage. This coverage shall extend through the contract guarantee period.

2.1.3. A Comprehensive Automobile Liability policy to cover bodily injury and property damage arising out of the ownership, maintenance or use of any motor vehicle, including owned, non-owned and hired vehicles. In light of the standard policy provisions concerning (a) loading and unloading, and b) definitions pertaining to motor vehicles licensed for road use vs. unlicensed or self-propelled construction equipment, it is strongly recommended that Comprehensive General Liability and Comprehensive Auto Liability be written by the same insurance carrier, though not necessarily in one policy.

2.1.4. CONTRACTOR will purchase for the OWNER an Owner's Protective Liability policy to protect the OWNER; the ENGINEER (Orchard, Hiltz & McCliment, Inc.); their consultants, agents, employees and such public corporations in whose jurisdiction the work is located for their contingent liability for work performed by the CONTRACTOR, the subcontractor(s) or the sub-subcontractor(s) under this Contract.

2.1.5. CONTRACTOR shall purchase a Builder's Risk-Installation Floater in a form acceptable to the OWNER covering property of the project for the full cost of replacement as of the time of any loss which shall include, as named insureds, (a) the CONTRACTOR, (b) all subcontractors, (c) all sub-subcontractors, (d) the OWNER, and Orchard, Hiltz & McCliment, Inc., Consulting Engineers, as their respective interests may prove to be at the time of loss, covering insurable property which is the subject of this Contract, whether in place, stored at the job site, stored elsewhere, or in transit at the risk of the insured(s). Coverage shall be effected on an "All Risk" form, including but not limited to the perils of fire, wind, collapse, vandalism, theft and earthquake, with exclusions normal to the cover. The CONTRACTOR may arrange for such deductibles as he deems to be within his ability to self-assume, but he will be held solely responsible for the amount of such deductible and for any co-insurance penalties. Any insured loss shall be adjusted with the OWNER and CONTRACTOR and paid to the OWNER and CONTRACTOR as Trustee for the other insureds.

2.1.6. Umbrella or Excess Liability

The OWNER or its representative may, for certain projects, require limits higher than those stated in paragraph. 2.2 that follows. CONTRACTOR is granted the option of arranging coverage under a single policy for the full limit required or by a combination of underlying policies with the balance provided by an Excess or Umbrella Liability policy equal to the total limit(s) requested. Umbrella or Excess policy wording shall be at least as broad as the primary or underlying policy(ies) and shall apply both to the CONTRACTOR’s general liability and to his automobile liability insurance.

2.1.7. Railroad Protective Liability

Where such an exposure exists, the CONTRACTOR will provide coverage in the use of each railroad company having jurisdiction over rights-of-way across which work under the Contract is to be performed. The form of policy and limits

of liability shall be determined by the railroad company(ies) involved.

2.2. Limits of Liability

The required limits of liability for insurance coverages requested in Section 2.1 shall be not less than the following:

2.2.1. Worker's Compensation

Coverage A Compensation	Statutory
Coverage B Employer's Liability	$100,000

2.2.2. Comprehensive General Liability

Bodily Injury - Each Occurrence	$500,000
Bodily Injury - Aggregate (Completed Operations)	$500,000
Property Damage - Each Occurrence	$100,000
Property Damage - Aggregate	$500,000
or combined single limit	$1,000,000

2.2.3. Comprehensive Automobile Liability

Bodily Injury	$500,000
Property Damage	$200,000
or combined single limit	$1,000,000

2.2.4. Owner's Protective

Bodily Injury- Each Occurrence	$1,000,000
Property Damage- Each Occurrence	$250,000
Property Damage- Aggregate	$500,000
or combined single limit	$1,500,000

2.2.5. Builder's Risk-Installation Floater

Cost to replace at time of loss

2.2.6. Umbrella or Excess Liability

$2,000,000

2.3. Insurance - Other Requirements

2.3.1. Notice of Cancellation or Intent Not to Renew

Policies will be endorsed to provide that at least thirty (30) days written notice shall be given to the OWNER and the ENGINEER of cancellation or of intent not to renew.

2.3.2. Evidence of Coverage

Prior to the commencement of work, the CONTRACTOR shall furnish to the OWNER, Certificates of Insurance in force on the Owner's Form of Certificate provided. Other forms of certificate are acceptable only if (1) they include all items prescribed in the Owner's Form of Certificate, including agreement to cancellation provisions outlined in Paragraph 2.3.1 above, and (2) they have the written approval of the OWNER and ENGINEER. The OWNER reserves the right to request complete copies of the policies if deemed necessary to ascertain details of coverage not provided by the certificates. Such policy copies shall be "Originally Signed Copies," and so designated.

A. Insurance Required for the CONTRACTOR

i. Workers' Compensation and Employers' Liability Comprehensive General Liability, including:

a. All premises and operations.

b. Explosion, collapse, and underground damage.

c. Contractors' Protective.

d. Contractual Liability for obligations assumed in the Indemnification-Hold Harmless agreement of this contract.

e. Personal Injury Liability.

f. Products and Completed Operations.

ii. Comprehensive Automobile Liability, including owned, non-owned, and hired vehicles.

iii. Umbrella or Excess Liability.

B. Insurance Required for the OWNER

Owners' Protective Liability which names as insured(s) the OWNER; the ENGINEER, Orchard, Hiltz & McCliment, Inc.; their consultants, agents, employees and such public corporations in whose jurisdiction the work is located.

C. Insurance Required for the CONTRACTOR and the OWNER

Builders Risk-Installation Floater which names as insured(s) the OWNER; the ENGINEER, Orchard, Hiltz & McCliment, Inc.; their consultants, agents and employees; the CONTRACTOR and all subcontractors.

2.3.3. Qualification of Insurers

In order to determine the financial strength and reputation of insurance carriers, all companies providing coverages required shall be licensed or approved by the Office of Financial and Insurance Services of the State of Michigan. The company shall also have a financial rating not lower than X and a policyholder's service rating no lower than A as listed in A.M. Best's Key Rating Guide, current edition. Companies with ratings lower than A:X will be acceptable only upon the written consent of the OWNER

End of Section

BID FORM

Ridge Road Sidewalk
Charter Township of Ypsilanti

THIS BID IS SUBMITTED TO:
Charter Township of Ypsilanti
7200 S Huron River Dr

Ypsilanti MI 48197

The undersigned Bidder proposes and agrees, if this Bid is accepted, to enter into an Agreement with OWNER in the form included in the Bidding Documents to perform all Work as specified or indicated in the Bidding Documents for the prices and within the times indicated in this Bid and in accordance with the other terms and conditions of the Bidding Documents.

Bidder accepts all of the terms and conditions of the Advertisement to Bid, Instructions to Bidders and Supplemental Instructions to Bidders.

In submitting this Bid, Bidder represents, as set forth in the Agreement, that:

A. Bidder has examined and carefully studied the Bidding Documents, the other related data identified in the Bidding Documents, and the following Addenda, receipt of all which is hereby acknowledged.

Addenda No.	Addenda Date	Signature
_____	_____	_____
_____	_____	_____
_____	_____	_____

B. Bidder has visited the site and become familiar with and is satisfied as to the general, local and Site conditions that may affect cost, progress, and performance of the Work.

C. Bidder is familiar with and is satisfied as to all federal, state and local Laws and Regulations that may affect cost, progress and performance of the Work.

D. Bidder has carefully studied all: (1) reports of explorations and tests of subsurface conditions at or contiguous to the site and all drawings of physical conditions in or relating to existing surface or subsurface structures at or contiguous to the site (except underground facilities) which have been identified in the Supplemental Instructions to Bidders, and (2) reports and drawings of a hazardous environmental condition, if any, which has been identified in the Supplemental Instructions to Bidders.

E. Bidder has obtained and carefully studied (or assumes responsibility for having done so) all additional or supplementary examinations, investigations, explorations, tests, studies and data concerning conditions (surface, subsurface and underground facilities) at or contiguous to the site which may affect cost, progress, or performance of the Work or which relate to any aspect of the means, methods, techniques, sequences, and procedures of construction to be

employed by Bidder, including applying the specific means, methods, techniques, sequences, and procedures of construction expressly required by the Bidding Documents to be employed by Bidder, and safety precautions and programs incident thereto.

F. Bidder does not consider that any further examinations, investigations, exploration, tests, studies, or data are necessary for the determination of this Bid for performance of the Work at the price(s) bid and within the times and in accordance with the other terms and conditions of the Bidding Documents.

G. Bidder is aware of the general nature of work to be performed by OWNER and others at the Site that relates to the Work as indicated in the Bidding Documents.

H. Bidder has correlated the information known to Bidder, information and observations obtained from visits to the Site, reports and drawings identified in the Bidding Documents, and all additional examinations, investigations, explorations, tests, studies, and data with the Bidding Documents.

I. Bidder has given ENGINEER written notice of all conflicts, errors, ambiguities, or discrepancies that Bidder has discovered in the Bidding Documents, and the written resolution thereof by ENGINEER is acceptable to Bidder.

J. The Bidding Documents are generally sufficient to indicate and convey understanding of all terms and conditions for the performance of the Work for which this Bid is submitted.

Bidder further represents that this Bid is genuine and not made in the interest of or on behalf of any undisclosed individual or entity and is not submitted in conformity with any agreement or rules of any group, association, organization or corporation; Bidder has not directly or indirectly induced or solicited any other Bidder to submit a false or sham Bid; Bidder has not solicited or induced any individual or entity to refrain from bidding; and Bidder has not sought by collusion to obtain for itself any advantage over any other Bidder or over OWNER.

Bidder will complete the Work in accordance with the Contract Documents for the following price(s):

BID FORM for
RIDGE ROAD SIDEWALK
Charter Township of Ypsilanti, Washtenaw County, State of Michigan
OHM Job Number: 0098-23-0020

Category 1 - Ridge Road Sidewalk

Item	Description	Estimated Quantity		Unit Price	Amount
1	Audio Video Route Survey	1	LS	$	$
2	Mobilization, Max. 5%	1	LS	$	$
3	Traffic Maintenance and Control	1	LS	$	$
4	Tree, Rem, 19 inch to 36 inch	3	Ea	$	$
5	Tree, Rem, 6 inch to 18 inch	2	Ea	$	$
6	Curb and Gutter, Rem	68	Ft	$	$
7	Fence, Rem	200	Ft	$	$
8	Pavt, Rem	190	Syd	$	$
9	Sidewalk, Rem	608	Syd	$	$
10	Exploratory Excavation	3	Ea	$	$
11	Preserve Utility Marker	2	Ea	$	$
12	Station Grading, Case A	17	Sta	$	$
13	Station Grading, Case B	12	Sta	$	$
14	Erosion Control, Inlet Protection, Fabric Drop	7	Ea	$	$
15	Erosion Control, Silt Fence	1927	Ft	$	$
16	Sprinkler Line, Salv and Reset	100	Ft	$	$
17	Sprinkler Head, Slav and Reset	12	Ea	$	$
18	Aggregate Base, 6 inch	1182	Syd	$	$
19	Maintenance Gravel	40	Ton	$	$
20	Utility Structure Cover, Adj	4	Ea	$	$
21	Hand Patching	20	Ton	$	$
22	HMA, 4EML	7	Ton	$	$
23	Conc Pavt, Nonreinf, 6 inch	80	Syd	$	$
24	Driveway, Nonreinf Conc, 8 inch	169	Syd	$	$
25	Curb and Gutter, Conc, Det F4	143	Ft	$	$
26	Driveway Opening, Conc, Det M	76	Ft	$	$
27	Spillway, Conc	28	Ft	$	$

BID FORM for
RIDGE ROAD SIDEWALK
Charter Township of Ypsilanti, Washtenaw County, State of Michigan
OHM Job Number: 0098-23-0020

28	Detectable Warning Surface	20	Ft	$		$
29	Curb Ramp Opening, Conc	28	Ft	$		$
30	Sudewalk, Conc, 4 inch	15071	Sft	$		$
31	Curb Ramp, Conc, 6 inch	300	Sft	$		$
32	Fence, Chain Link, 48 inch	200	Ft	$		$
33	Sign, Salv and Reset	1	Ea	$		
34	Pavt Mrkg, Polyurea, 12 inch, Crosswalk	212	Ft	$		
35	Turf Establishment	32	Sta	$		
36	Permit Allowance	1	Dlr	$		
	Subtotal Category 1 - Ridge Road Sidewalk (ITEM 1-36 incl.):					**$**

Category 2 - Mid-Block Crossing (Alt A)

Item	Description	Estimated Quantity		Unit Price	Amount
37	Pavt, Rem	233	Syd	$	$
38	Station Grading, Case A	3	Sta	$	$
39	Erosion Control, Silt Fence	134	Ft	$	$
40	HMA, 4EML	17	Ton	$	$
41	Driveway, Nonreinf Conc, 8 inch	28	Syd	$	$
42	Detectable Warning Surface	10	Ft	$	$
43	Sidewalk, Conc, 4 inch	136	Sft	$	$
44	Sidewalk, Conc, 6 inch	1553	Sft	$	$
45	Curb Ramp, Conc, 6 inch	150	Sft	$	$
46	Pavt Mrkg, Polyurea, 12 inch, Crosswalk	20	Ft	$	$
	Subtotal Category 2 - Mid-Block Crossing (Alt A) (ITEM 37-46 incl.):				**$**

Subtotal Category 1 - Ridge Road Sidwalk: $

Subtotal Category 2 - Mid-Block Crossing (Alt A): $

Total Bid Amount (Categories 1 & 2 incl.): $

Bidder acknowledges that estimated quantities are not guaranteed, and are solely for the purpose of comparison of Bids, and final payment for all unit price bid items will be based on actual quantities constructed in accordance with the Contract Documents.

Bidder agrees that the Work will be Substantially Complete on or before November 11, 2023 OR May 17, 2024 (See SIB), and completed and ready for final payment in accordance with the General Conditions on or before November 27, 2023 OR June 28, 2024 (See SIB).

Bidder accepts the provisions of the Agreement as to liquidated damages in the event of failure to complete the Work within the times specified above, which shall be stated in the Agreement.

The following documents are attached to and made a condition of this Bid:

- Bid Guarantee (circle one): Bid Bond
- Statement of Qualifications
- Subcontractor Listing
- Legal Status of Bidder

SUBMITTED on _____ , 20 _____

State Contractor License No. _____ . (If applicable)

If Bidder is:

An Individual

Name (typed or printed): _____

By: _____ (SEAL)
(Individual's signature)

Doing business as: _____

Business address: _____

_____

Phone No.: _____ FAX No.: _____

A Partnership

Partnership Name: _____ (SEAL)

By: _____
(Signature of general partner – attach evidence of authority to sign)

Name (typed or printed): _____

Business address: _____

_____

Phone No.: _____ FAX No.: _____

A Corporation

Corporation Name: _____ (SEAL)

State of Incorporation: _____

Type (General Business, Professional, Service, Limited Liability): _____

By: _____
(Signature – attach evidence of authority to sign)

Name (typed or printed): _____

Title: _____

Attest: _____ (CORPORATE SEAL)
(Signature of Corporate Secretary)

Business address: _____

_____

Phone No.: _____ FAX No.: _____

Date of Qualification to do business is: _____

A Joint Venture

Joint Venture Name: _____ (SEAL)

By: _____

(Signature of joint venture partner – attach evidence of authority to sign)

Name (typed or printed): _____

Title:

Business address: _____

_____

Phone No.: _____ FAX No.: _____

Joint Venture Name: _____ (SEAL)

By: _____

(Signature of joint venture partner – attach evidence of authority to sign)

Name (typed or printed): _____

Title:

Business address: _____

_____

Phone No.: _____ FAX No.: _____

Phone and FAX Number, and Address for receipt of official communications.

_____

_____

(Each joint venturer must sign. The manner of signing for each individual, partnership, and corporation that is a party to the joint venture should be in the manner indicated above).

BID GUARANTEE

The undersigned attaches bid security in the form of a BID BOND / CERTIFIED CHECK / CASHIER'S CHECK (Circle one) in the amount of _____
_____
Dollars ($_____).

The undersigned agrees, if awarded the Contract, to deliver the executed Agreement and bonds and furnish evidence of insurance within fourteen (14) business days after the date of the Notice of Award. And to complete the proposed work within the time specified in the Bid Form.

If the Bid is accepted by the OWNER, and the undersigned shall fail to enter into the Agreement as aforesaid and to furnish the required surety bonds within fourteen (14) business days after Notice of Award, the Bid Bond in the amount of $_____ accompanying this Bid shall be considered due and payable to the OWNER.

If the undersigned enters into the Agreement in accordance with this Bid or if his Bid is rejected, then the accompanying Bid Guarantee shall be voided.

In submitting this Bid, it is understood that the right is reserved by the OWNER to reject any or all bids, to waive irregularities and/or formalities and, in general, to make award in any manner deemed by it, in its sole discretion, to be in the best interest of the OWNER.

SIGNED AND SEALED THIS _____ DAY OF _____ , 20 _____

Authorized Signature of Bidder: _____

_____

_____

(TITLE) _____

(SEAL)

BID BOND

BIDDER (Name and Address):

SURETY (Name and Address of Principal Place of Business):

OWNER (Name and Address):

Charter Township of Ypsilanti

7200 S Huron River Dr

Ypsilanti MI 48197

BID

BID DUE DATE: September 7, 2023

PROJECT (Brief Description Including Location):

Construction and rehabilitation of approximately 3,000 feet of 5-foot-wide concrete sidewalk along the west side of Ridge Road, construction of a new bus stop pad at the southwest corner of Ridge Road and Clark Road, minor improvements to the existing bus stop at the northwest corner of Ridge Road and Holmes Road, and construction of a mid-block crossing on Ridge Road at Clark Road.

BOND

BOND NUMBER: _____

DATE (Not later than Bid due date): _____

PENAL SUM: _____ _____
(Words) (Figures)

IN WITNESS WHEREOF, Surety and Bidder, intending to be legally bound hereby, subject to the terms printed on the reverse side hereof, do each cause this Bid Bond to be duly executed on its behalf by its authorized officer, agent, or representative.

BIDDER	SURETY
(Seal)	(Seal)
Bidder's Name and Corporate Seal	Surety's Name and Corporate Seal
By: _____	By: _____
Signature and Title	Signature and Title
	(Attach Power of Attorney)
Attest: _____	Attest: _____
Signature and Title	Signature and Title

1. Bidder and Surety, jointly and severally, bind themselves, their heirs, executors, administrators, successors and assigns to pay to OWNER upon default of Bidder the penal sum set forth on the face of this Bond.

2. Default of Bidder shall occur upon the failure of Bidder to deliver within the time required by the Bidding Documents (or any extension thereof agreed to in writing by OWNER) the executed Agreement required by the Bidding Documents and any performance and payment bonds required by the Bidding Document.

3. This obligation shall be null and void if:

   3.1. OWNER accepts Bidder's Bid and Bidder delivers within the time required by the Bidding Documents (or any extension thereof agreed to in writing by OWNER) the executed Agreement required by the Bidding Documents and any performance and payment Bonds required by the Bidding Documents, or

   3.2. All Bids are rejected by OWNER, or

   3.3. OWNER fails to issue a Notice of Award to Bidder within the time specified in the Bidding Documents (or any extension thereof agreed to in writing by Bidder and, if applicable, consented to by Surety when required by paragraph 5 hereof).

4. Payment under this Bond will be due and payable upon default by Bidder and within 30 calendar days after receipt by Bidder and Surety of written notice of default from OWNER, which notice will be given with reasonable promptness, identifying this Bond and the Project and including a statement of the amount due.

5. Surety waives notice of and any and all defenses based on or arising out of any time extension to issue Notice of Award agreed to in writing by OWNER and Bidder, provided that the total time of issuing Notice of Award including extensions shall not in the aggregate exceed 120 days from Bid due date without Surety's written consent.

6. No suit or action shall be commenced under this Bond prior to 30 calendar days after the notice of default required in paragraph 4 above is received by Bidder and Surety and in no case later than one year after Bid due date.

7. Any suit or action under this Bond shall be commenced only in a court of competent jurisdiction located in the state in which the Project is located.

8. Notices required hereunder shall be in writing and sent to Bidder and Surety at their respective addresses shown on the face of this Bond. Such notices may be sent by personal delivery, commercial courier or by United States Registered or Certified Mail, return receipt requested, postage pre-paid, and shall be deemed to be effective upon receipt by the party concerned.

9. Surety shall cause to be attached to this Bond a current and effective Power of Attorney evidencing the authority of the officer, agent or representative who executed this Bond on behalf of Surety to execute, seal and deliver such Bond and bind the Surety thereby.

10. This Bond is intended to conform to all applicable statutory requirements. Any applicable requirement of any applicable statute that has been omitted from this Bond shall be deemed to be included herein as if set forth at length. If any provision of this Bond conflicts with any applicable statute, then the provision of said statute shall govern and the remainder of this Bond that is not in conflict therewith shall continue in full force and effect.

11. The term "Bid" as used herein includes a Bid, offer or proposal as applicable.

End of Section

STATEMENT OF QUALIFICATIONS

Bidder must answer all questions. If more space is needed to complete a question, attach a separate sheet. Bidder may submit any additional information.

Name: _____

Address: _____ Phone: _____

_____

Number of years operating under your present name: _____

Bonding Capacity: _____

Bonding Company: _____ Phone: _____

Prequalified by MDOT to bid on projects of this magnitude and type of work

(circle one) YES NO Prequalification Number: _____

General nature of work performed by your company: _____

_____

_____

Background and experience of the principal members of your organization including officers:

_____

_____

_____

Major equipment available for this contract: _____

_____

_____

_____

CURRENT PROJECTS:

	Project	Project	Project
Name:			
Owner:			
Contact Person:			
Phone:			
Contract Amount:			
Completion Date:			
% Complete:			

COMPLETED PROJECTS:

	Project	Project	Project
Name:			
Owner:			
Contact Person:			
Phone:			
Contract Amount:			
Date Completed:			

Additional information that may be pertinent to demonstrate your ability to complete this project.

Has your company defaulted on a contract? _____

If yes, where and why? _____

_____

I hereby certify that the above answers are correct and true.

By: _____
Name

_____
Signature

_____
Title

Number of additional sheets attached: _____

SUBCONTRACTOR LISTING

Bidder submits to use the following subcontractors for performance of the work in accordance with Article 9 of the Instructions to Bidders.

Note to Bidder: List all work you propose to sublet on this Contract. Include each subcontractors name, address, phone, fax and e-mail address. Also include a description of work to be performed by subcontractor. For example: restoration, landscaping, lighting, signage, bore and jack, etc. List approximate dollar value of the subcontract.

NAME, ADDRESS & PHONE NO. OF SUBCONTRACTOR	DESCRIPTION OF WORK	APPROXIMATE DOLLAR VALUE OF SUBCONTRACT
_____	_____	$ _____
_____		
_____		
Phone: _____		
FAX: _____		
E-mail _____		
_____	_____	$ _____
_____		
_____		
Phone: _____		
FAX: _____		
E-mail _____		

_____ _____ $ _____

_____

_____

Phone: _____

FAX: _____

E-mail _____

_____ _____ $ _____

_____

_____

Phone: _____

FAX: _____

E-mail _____

_____ _____ $ _____

_____

_____

Phone: _____

FAX: _____

E-mail _____

IRAN LINKED BUSINESS CERTIFICATION

Pursuant to Michigan Public Act 517 of 2012, any Bidder that submits a bid on a request for proposal with Charter Township of Ypsilanti shall certify that Bidder is not an Iran linked business. An Iran linked business is not eligible to submit a bid on a request for proposal with Charter Township of Ypsilanti. See attached definitions regarding this certification.

The undersigned Bidder does hereby certify, pursuant to Michigan Public Act 517 of 2012, that:

Bidder is not a person engaging in investment activities in the energy sector of Iran, including a person that provides oil or liquefied natural gas tankers, or products used to construct or maintain pipelines used to transport oil or liquefied natural gas, for the energy sector of Iran, or

Bidder is not a financial institution that extends credit to another person if that person will use the credit to engage in investment activities in the energy sector of Iran.

Date: _____ _____

By: _____

Its: _____

Subscribed and sworn to before me, a Notary Public on this____day of_____,_.

Notary Public _____

_____ County, Michigan

My Commission Expires: _____

DEFINITIONS

(A) "Energy sector of Iran" means activities to develop petroleum or natural gas resources or nuclear power in Iran.

(B) "Investment" means 1 or more of the following:

i. A commitment or contribution of funds or property.

ii. A loan or other extension of credit.

iii. The entry into or renewal of a contract for goods or services.

(C) "Investment activity" means 1 or more of the following:

i. A person who has an investment of $20,000,000.00 or more in the energy sector of Iran.

ii. A financial institution that exceeds $20,000,000.00 or more in credit to another person, for 45 days or more, if that person will use the credit for investment in the energy sector of Iran.

(D) "Iran" means any agency or instrumentality of Iran.

(E) "Iran linked business" means either of the following:

i. A person engaging in investment activities in the energy sector of Iran, including a person that provides oil or liquefied natural gas tankers or products used to construct or maintain pipelines used to transport oil or liquefied natural gas for the energy sector of Iran.

ii. A financial institution that extends credit to another person, if that person will use the credit to engage in investment activities in the energy sector of Iran.

(F) "Person" means any of the following:

i. An individual, corporation, company, limited liability company, business association, partnership, society, trust, or any other nongovernmental entity, organization, or group.

ii. Any governmental entity or instrumentality of a government, including a multilateral development institution, as defined in section 1701(c) (3) of the international financial institutional act, 22 USC 262r(c) (3).

iii. Any successor, subunit, parent company, or subsidiary of, or company under common ownership or control with, any entity described in subparagraph (i) or (ii).

(G) "Public entity" means this state or an agency or authority of this state, school district, community college district, intermediate school district, city, village, township, county, public authority, or public airport authority.

AGREEMENT

This AGREEMENT is by and between Charter Township of Ypsilanti (hereinafter called OWNER) and _____ (hereinafter called CONTRACTOR).

ARTICLE 1 WORK

1.01 CONTRACTOR shall complete all Work as specified or indicated in the Contract Documents. The Work is generally described as follows:

Construction and rehabilitation of approximately 3,000 feet of 5-foot-wide concrete sidewalk along the west side of Ridge Road, construction of a new bus stop pad at the southwest corner of Ridge Road and Clark Road, minor improvements to the existing bus stop at the northwest corner of Ridge Road and Holmes Road, and construction of a mid-block crossing on Ridge Road at Clark Road.

ARTICLE 2 THE PROJECT

2.01 The Project for which the Work under the Contract Documents may be the whole or only a part is generally described as follows:

Ridge Road Sidewalk

ARTICLE 3 ENGINEER

3.01 The Project has been designed by Orchard Hiltz & McCliment, Inc. who is hereinafter called ENGINEER and who is to act as OWNER's representative, assume all duties and responsibilities, and have the rights and authority assigned to ENGINEER in the Contract Documents in connection with the completion of the Work in accordance with the Contract Documents.

ARTICLE 4 CONTRACT TIMES

4.01 Time is of the Essence

A. All time limits for Milestones, if any, Substantial Completion, and completion and readiness for final payment as stated in the Contract Documents are of the essence of the Contract.

4.02 Dates for Substantial Completion and Final Payment

A. The Work will be substantially completed on or before November 11, 2023 OR May 17, 2024 (See SIB), and completed and ready for final payment on or before November 27, 2023 OR June 28, 2024 (See SIB).

4.03 Liquidated Damages

A. CONTRACTOR and OWNER recognize that time is of the essence of this Agreement and that OWNER will suffer financial loss if the Work is not completed within the times specified in paragraph 4.02 above, plus any extensions thereof allowed in accordance with Article 15 of the General Conditions. The parties also recognize the delays, expense, and difficulties involved in proving in a legal or arbitration proceeding the actual loss suffered by OWNER if the Work is not completed on time. Accordingly, instead of requiring any such proof, OWNER and CONTRACTOR agree that as liquidated damages for delay (but not as a penalty), CONTRACTOR shall pay OWNER $800.00/day for each day that expires after the time specified in paragraph 4.02 for Substantial Completion until the Work is substantially complete. After Substantial Completion, if CONTRACTOR shall neglect, refuse, or fail to

complete the remaining Work within the Contract Time or any proper extension thereof granted by OWNER, CONTRACTOR shall pay OWNER $800.00/day for each day that expires after the time specified in paragraph 4.02 for completion and readiness for final payment until the Work is completed and ready for final payment.

ARTICLE 5 CONTRACT PRICE

5.01 OWNER shall pay CONTRACTOR for completion of the Work in accordance with the Contract Documents an amount in current funds equal to the sum of the amounts determined pursuant to paragraph 5.01.A below:

A. For all Unit Price Work, an amount equal to the sum of the established unit price for each separately identified item of Unit Price Work multiplied by the measured quantity of that item as indicated in the Bid Form (Bid Form to be inserted here at the time the Agreement is to be signed.):

As provided in Article 13 of the General Conditions, estimated quantities are not guaranteed, and determinations of actual quantities and classifications are to be made by ENGINEER as provided in Article 23 of the General Conditions.

ARTICLE 6 PAYMENT PROCEDURES

6.01 Submittal and Processing of Payments

CONTRACTOR shall be paid in accordance with Article 14 of the General Conditions.

ARTICLE 7 CONTRACTOR'S REPRESENTATIONS

7.01 In order to induce OWNER to enter into this Agreement CONTRACTOR makes the following representations:

CONTRACTOR has examined and carefully studied the Contract Documents and the other related data identified in the Bidding Documents.

CONTRACTOR has visited the site and become familiar with and is satisfied as to the general, local and site conditions that may affect cost, progress, and performance of the Work.

CONTRACTOR is familiar with and is satisfied as to all federal, state, and local Laws and Regulations that may affect cost, progress, and performance of the Work.

CONTRACTOR has carefully studied all: (1) reports of explorations and tests of subsurface conditions at or contiguous to the site and all drawings of physical conditions in or relating to existing surface or subsurface structures at or contiguous to the site (except underground facilities) which have been identified in the Supplemental Instructions to Bidders and (2) reports and drawings of a hazardous environmental condition, if any, at the site which has been identified in the Supplemental Instructions to Bidders.

CONTRACTOR has obtained and carefully studied (or assumes responsibility for having done so) all additional or supplementary examinations, investigations, explorations, tests, studies, and data concerning conditions (surface, subsurface, and underground facilities) at or contiguous to the site which may affect cost, progress, or performance of the Work or which relate to any aspect of the means, methods, techniques, sequences and procedures of construction to be employed by CONTRACTOR, including applying the specific means, methods, techniques, sequences, and procedures of construction, if any, expressly required by the Contract Documents to be employed by CONTRACTOR, and safety precautions and programs incident thereto.

CONTRACTOR does not consider that any further examinations, investigations, exploration, tests, studies, or data are necessary for the performance of the Work at the Contract Price, within the Contract Times, and in accordance with the other terms and conditions of the Contract Documents.

CONTRACTOR is aware of the general nature of work to be performed by OWNER and others at the Site that relates to the Work as indicated in the Contract Documents.

CONTRACTOR has correlated the information known to CONTRACTOR, information and observations obtained from visits to the site, reports and drawings identified in the Contract Documents, and all additional examinations, investigations, explorations, tests, studies, and data with the Contract Documents.

CONTRACTOR has given ENGINEER written notice of all conflicts, errors, ambiguities, or discrepancies that CONTRACTOR has discovered in the Contract Documents, and the written resolution thereof by ENGINEER is acceptable to CONTRACTOR.

The Contract Documents are generally sufficient to indicate and convey understanding of all terms and conditions for performance and furnishing of the Work.

ARTICLE 8 CONTRACT DOCUMENTS

8.01 Contents

A. The Contract Documents consist of the following:

1. This Agreement;
2. Performance Bond;
3. Payment Bond;
4. Maintenance and Guarantee Bond;
5. General Conditions;
6. General Specifications;
7. Technical Specifications as listed in the table of contents of the Project Manual;
8. Appendices (excluding geotechnical reports);
9. Drawings consisting of a cover sheet and sheets numbered 1 through 17, inclusive, with each sheet (excluding standard details) bearing the following general title: Ridge Road Sidewalk;
10. Addenda (numbers _____ to _____, inclusive);
11. Exhibits to the Agreement (enumerated as follows):
    a. Documentation submitted by CONTRACTOR prior to Notice of Award (pages ___ to ___, inclusive);
    b. _____
12. The following which may be delivered or issued on or after the Effective Date of the Agreement and are not attached hereto:
    a. Written Amendments;
    b. Work Orders;
    c. Change Order(s).

The documents listed in paragraph 8.01.A are attached to this Agreement (except as expressly noted otherwise above).

There are no Contract Documents other than those listed above in this Article 8.

ARTICLE 9 MISCELLANEOUS

9.01 Terms

Terms used in this Agreement will have the meanings indicated in the General Conditions.

9.02 Assignment of Agreement

No assignment by a party hereto of any rights under or interests in the Agreement will be binding on another party hereto without the written consent of the party sought to be bound; and,

specifically but without limitation, moneys that may become due and moneys that are due may not be assigned without such consent (except to the extent that the effect of this restriction may be limited by law), and unless specifically stated to the contrary in any written consent to an assignment, no assignment will release or discharge the assignor from any duty or responsibility under the Contract Documents.

9.03 Successors and Assigns

OWNER and CONTRACTOR each binds itself, its partners, successors, assigns, and legal representatives to the other party hereto, its partners, successors, assigns, and legal representatives in respect to all covenants, agreements, and obligations contained in the Contract Documents.

9.04 Severability

Any provision or part of the Contract Documents held to be void or unenforceable under any Law or Regulation shall be deemed stricken, and all remaining provisions shall continue to be valid and binding upon OWNER and CONTRACTOR, who agree that the Contract Documents shall be reformed to replace such stricken provision or part thereof with a valid and enforceable provision that comes as close as possible to expressing the intention of the stricken provision.

IN WITNESS WHEREOF, OWNER and CONTRACTOR have signed this Agreement in duplicate. One counterpart each has been delivered to OWNER and CONTRACTOR. All portions of the Contract Documents have been signed or identified by OWNER and CONTRACTOR or on their behalf.

This Agreement will be effective on _____ , _____
(which is the Effective Date of the Agreement)

OWNER:	CONTRACTOR:
By:	By:
(CORPORATE SEAL)	(CORPORATE SEAL)
Attest	Attest
Address for giving notices:	Address for giving notices:
	License No.
(If OWNER is a corporation, attach evidence of authority to sign. If OWNER is a public body, attach evidence of authority to sign and resolution or other documents authorizing execution of OWNER – CONTRACTOR Agreement)	(Where applicable) Agent for service of process: (If CONTRACTOR is a corporation or a partnership, attach evidence of authority to sign.)
Designated Representative:	Designated Representative:
Name:	Name:
Title:	Title:
Address:	Address:
Phone:	Phone:
FAX:	FAX:

PERFORMANCE BOND

Any singular reference to CONTRACTOR, Surety, OWNER or other party shall be considered plural where applicable.

CONTRACTOR (Name and Address):

SURETY (Name and Address of Principal Place of Business): _____
_____
_____
_____

OWNER:
Charter Township of Ypsilanti
7200 S Huron River Dr
Ypsilanti MI 48197

CONTRACT
Date:
Amount:
Description: Ridge Road Sidewalk
Charter Township of Ypsilanti

BOND
Date (Not earlier than Contract Date):
Amount:
Modifications to this Bond Form:

Surety and CONTRACTOR, intending to be legally bound hereby, subject to the terms printed on the reverse side hereof, do each cause this Performance Bond to be duly executed on its behalf by its authorized officer, agent or representative.

CONTRACTOR AS PRINCIPAL	SURETY
Company: _____ (Corp. Seal)	Company: _____ (Corp. Seal)
Signature: _____	Signature: _____
Name & Title: _____	Name & Title: _____ (Attach Power of Attorney)

(Space is provided below for signatures of additional parties, if required).

CONTRACTOR AS PRINCIPAL	SURETY
Company: (Corp. Seal)	Company: _____ (Corp. Seal)
Signature: _____	Signature: _____
Name & Title: _____	Name & Title: _____ (Attach Power of Attorney)

1. The CONTRACTOR and the Surety, jointly and severally, bind themselves, their heirs, executors, administrators, successors and assigns to the OWNER for the performance of the Contract, which is incorporated herein by reference.

2. If the CONTRACTOR performs the Contract, the Surety and the CONTRACTOR have no obligation under this Bond, except to participate in conferences as provided in paragraph 3.1

3. If there is no OWNER Default, the Surety's obligation under this Bond shall arise after:

    3.1. The OWNER has notified the CONTRACTOR and the Surety at the addresses described in paragraph 10 below, that the OWNER is considering declaring a CONTRACTOR Default and has requested and attempted to arrange a conference with the CONTRACTOR and the Surety to be held not later than fifteen days after receipt of such notice to discuss methods of performing the Contract. If the OWNER, the CONTRACTOR and the Surety agree, the CONTRACTOR shall be allowed a reasonable time to perform the Contract, but such an agreement shall not waive the OWNER's right, if any, subsequently to declare a CONTRACTOR Default; and

    3.2. The OWNER has declared a CONTRACTOR Default and formally terminated the CONTRACTOR's right to complete the Contract. Such CONTRACTOR Default shall not be declared earlier than twenty days after the CONTRACTOR and the Surety have received notice as provided in paragraph 3.1; and

    3.3. The OWNER has agreed to pay the Balance of the Contract Price to:

        3.3.1. The Surety in accordance with the terms of the Contract;

        3.3.2. Another contractor selected pursuant to paragraph 4.3 to perform the Contract.

4. When the OWNER has satisfied the conditions of paragraph 3, the Surety shall promptly and at the Surety's expense take one of the following actions:

    4.1. Arrange for the CONTRACTOR, with consent of the OWNER, to perform and complete the Contract; or

    4.2. Undertake to perform and complete the Contract itself, through its agents or through independent contractors; or

    4.3. Obtain bids or negotiated proposals from qualified contractors acceptable to the OWNER for a contract for performance and completion of the Contract, arrange for a contract to be prepared for execution by the OWNER and the contractor selected with the OWNER's concurrence, to be secured with performance and payment bonds executed by a qualified surety equivalent to the Bonds issued on the Contract, and pay to the OWNER the amount of damages as described in paragraph 6 in excess of the Balance of the Contract Price incurred by the OWNER resulting from the CONTRACTOR Default; or

    4.4. Waive its right to perform and complete, arrange for completion, or obtain a new contractor and with reasonable promptness under the circumstances;

        4.4.1. After investigation, determine the amount for which it may be liable to the OWNER and, as soon as practicable after the amount is determined, tender payment therefore to the OWNER; or

4.4.2. Deny liability in whole or in part and notify the OWNER citing reasons therefore.

5. If the Surety does not proceed as provided in paragraph 4 with reasonable promptness, the Surety shall be deemed to be in default on the Bond fifteen days after receipt of an additional written notice from the OWNER to the Surety demanding that the Surety perform its obligations under this Bond, and the OWNER shall be entitled to enforce any remedy available to the OWNER. If the Surety proceeds as provided in paragraph 4.4, and the OWNER refuses the payment tendered or the Surety has denied liability, in whole or in part, without further notice the OWNER shall be entitled to enforce any remedy available to the OWNER.

6. After the OWNER has terminated the CONTRACTOR's right to complete the Contract, and if the Surety elects to act under paragraph 4.1, 4.2, or 4.3 above, then the responsibilities of the Surety to the OWNER shall not be greater than those of the CONTRACTOR under the Contract, and the responsibilities of the OWNER to the Surety shall not be greater than those of the OWNER under the Contract. To a limit of the amount of this Bond, but subject to commitment by the OWNER of the Balance of the Contract Price to mitigation of costs and damages on the Contract, the Surety is obligated without duplication for:

   6.1. The responsibilities of the CONTRACTOR for correction of defective Work and completion of the Contract;

   6.2. Additional legal, design professional and delay costs resulting from the CONTRACTOR’s Default, and resulting from the actions or failure to act of the Surety under paragraph 4; and

   6.3. Liquidated damages, or if no liquidated damages are specified in the Contract, actual damages caused by delayed performance or non-performance of the CONTRACTOR.

7. The Surety shall not be liable to the OWNER or others for obligations of the CONTRACTOR that are unrelated to the Contract, and the Balance of the Contract Price shall not be reduced or set off on account of any such unrelated obligations. No right of action shall accrue on the bond to any person or entity other than the OWNER or its heirs, executors, administrators, or successors.

8. The Surety hereby waives notice of any change, including changes of time, to the Contract or to related subcontracts, purchase orders and other obligations.

9. Any proceeding, legal or equitable, under this Bond may be instituted in any court of competent jurisdiction in the location in which the Work or part of the Work is located and shall be instituted within two years after CONTRACTOR Default or within two years after the CONTRACTOR ceased working or within two years after the Surety refuses or fails to perform its obligations under this Bond, whichever occurs first. If the provisions of this paragraph are void or prohibited by law, the minimum period of limitation available to sureties as a defense in the jurisdiction of the suit shall be applicable.

10. Notice to the Surety, the OWNER or the CONTRACTOR shall be mailed or delivered to the address shown on the signature page.

11. When this Bond has been furnished to comply with a statutory or other legal requirement in the location where the Contract was being performed, any provision in this Bond conflicting with said statutory or legal requirement shall be deemed deleted here from and provisions conforming to such statutory or other legal requirement shall be deemed incorporated herein. The intent is that this Bond shall be construed as a

statutory bond and not as a common law bond.

12. Definitions.

12.1. Balance of the Contract Price: The total amount payable by the OWNER to the CONTRACTOR under the Contract after all proper adjustments have been made, including allowance to the CONTRACTOR or any amounts received or to be received by the OWNER in settlement of insurance or other Claims for damages to which the CONTRACTOR is entitled, reduced by all valid and proper payments made to or on behalf of the CONTRACTOR under the Contract.

12.2. Contract: the agreement between the OWNER and the CONTRACTOR identified on the signature page, including all Contract Documents and changes thereto.

12.3. CONTRACTOR Default: Failure of the CONTRACTOR, which has neither been remedied nor waived, to perform or otherwise to comply with the terms of the Contract.

12.4. OWNER Default: Failure of the OWNER, which has neither been remedied nor waived, to pay the CONTRACTOR as required by the contract or to perform and complete or comply with the other terms thereof.

End of Section

PAYMENT BOND

Any singular reference to CONTRACTOR, Surety, OWNER or other party shall be considered plural where applicable.

CONTRACTOR (Name and Address):

SURETY (Name and Address of Principal Place of Business): _____
_____
_____
_____

OWNER:
Charter Township of Ypsilanti
7200 S Huron River Dr
Ypsilanti MI 48197

CONTRACT
Date:
Amount:
Description: Ridge Road Sidewalk
Charter Township of Ypsilanti

BOND
Date (Not earlier than Contract Date):
Amount:
Modifications to this Bond Form:

Surety and CONTRACTOR, intending to be legally bound hereby, subject to the terms printed on the reverse side hereof, do each cause this Payment bond to be duly executed on its behalf by its authorized officer, agent, or representative.

CONTRACTOR AS PRINCIPAL		SURETY	
Company: _____	(Corp. Seal)	Company: _____	(Corp. Seal)
Signature: _____		Signature: _____	
Name and Title: _____		Name and Title: _____ (Attach Power of Attorney)	

(Space is provided below for signatures of additional parties, if required).

CONTRACTOR AS PRINCIPAL		SURETY	
Company: _____	(Corp. Seal)	Company: _____	(Corp. Seal)
Signature: _____		Signature: _____	
Name & Title: _____		Name & Title: _____ (Attach Power of Attorney)	

1. The CONTRACTOR and the Surety, jointly and severally, bind themselves, their heirs, executors, administrators, successors and assigns to the OWNER to pay for labor, materials and equipment furnished for use in the performance of the Contract, which is incorporated herein by reference.

2. With respect to the OWNER, this obligation shall be null and void if the CONTRACTOR:

   2.1. Promptly makes payment, directly or indirectly, for all sums due Claimants, and

   2.2. Defends, indemnifies and holds harmless the OWNER from all claims, demands, liens or suits by any person or entity who furnished labor, materials or equipment for use in the performance of the Contract, provided the OWNER has promptly notified the CONTRACTOR and the Surety (at the addresses described in paragraph 12) of any claims, demands, liens or suits and tendered defense of such claims, demands, liens or suits to the CONTRACTOR and the Surety, and provided there is no OWNER Default.

3. With respect to Claimants, this obligation shall be null and void if the CONTRACTOR promptly makes payment, directly or indirectly, for all sums due.

4. The Surety shall have no obligation to Claimants under this Bond until:

   4.1. Claimants who are employed by or have a direct contract with the CONTRACTOR have given notice to the surety (at the addresses described in paragraph 12) and sent a copy, or notice thereof, to the OWNER, stating that a claim is being made under this Bond and, with substantial accuracy, the amount of the claim.

   4.2. Claimants who do not have a direct contract with the CONTRACTOR:

      4.2.1. Have furnished written notice to the CONTRACTOR and sent a copy, or notice thereof, to the OWNER, within 90 days after having last performed labor or last furnished materials or equipment included in the claim stating, with substantial accuracy, the amount of the claim and the name of the party to whom the materials were furnished or supplied or for whom the labor was done or performed; and

      4.2.2. Have either received a rejection in whole or in part from the CONTRACTOR, or not received within 30 days of furnishing the above notice any communication from the CONTRACTOR by which the CONTRACTOR had indicated the claim will be paid directly or indirectly; and

      4.2.3. Not having been paid within the above 30 days, have sent a written notice to the Surety and sent a copy, or notice thereof, to the OWNER, stating that a claim is being made under this Bond and enclosing a copy of the previous written notice furnished to the CONTRACTOR.

5. If a notice required by paragraph 4 is given by the OWNER to the CONTRACTOR or to the Surety, that is sufficient compliance.

6. When the Claimant has satisfied the conditions of paragraph 4, the Surety shall promptly and at the Surety's expense take the following actions:

   6.1. Send an answer to the Claimant, with a copy to the OWNER, within 45 days after receipt of the claim, stating the amounts that are undisputed and the basis for challenging any amounts that are disputed.

   6.2. Pay or arrange for payment of any undisputed amounts.

7. The Surety's total obligation shall not exceed the amount of this Bond, and the amount of this Bond shall be credited for any payments made in good faith by the Surety.

8. Amounts owed by the OWNER to the CONTRACTOR under the Contract shall be used for the performance of the Contract and to satisfy claims, if any, under any Performance Bond. By the CONTRACTOR

furnishing and the OWNER accepting this Bond, they agree that all funds earned by the CONTRACTOR in the performance of the Contract are dedicated to satisfy obligations of the CONTRACTOR and the Surety under this Bond, subject to the OWNER's priority to use the funds for the completion of the Work.

9. The Surety shall not be liable to the OWNER, Claimants or others for obligations of the CONTRACTOR that are unrelated to the Contract. The OWNER shall not be liable for payment of any costs or expenses of any Claimant under this Bond, and shall have under this Bond no obligations to make payments to, give notices on behalf of, or otherwise have obligations to Claimants under this Bond.

10. The Surety hereby waives notice of any change, including changes of time, to the Contract or to related subcontracts, purchase orders and other obligations.

11. No suit or action shall be commenced by a Claimant under this Bond other than in a court of competent jurisdiction in the location in which the Work or part of the Work is located or after the expiration of one year from the date (1) on which the Claimant gave the notice required by paragraph 4.1 or paragraph 4.2.3, or (2) on which the last labor or service was performed by anyone or the last materials or equipment were furnished by anyone under the Construction Contract, whichever of (1) or (2) first occurs. If the provisions of this paragraph are void or prohibited by law, the minimum period of limitation available to sureties as a defense in the jurisdiction of the suit shall be applicable.

12. Notice to the Surety, the OWNER or the CONTRACTOR shall be mailed or delivered to the addressee shown on the signature page. Actual receipt of notice by Surety, the OWNER or the CONTRACTOR, however accomplished, shall be sufficient compliance as of the date received at the address shown on the signature page.

13. When this Bond has been furnished to comply with a statutory or other legal requirement in the location where the Contract was to be performed, any provision in the Bond conflicting with said statutory or legal requirement shall be deemed deleted herefrom and provisions conforming to such statutory or other legal requirement shall be deemed incorporated herein. The intent is, that this Bond shall be construed as a statutory Bond and not as a common law bond.

14. Upon request of any person or entity appearing to be a potential beneficiary of this Bond, the CONTRACTOR shall promptly furnish a copy of the Bond or shall permit a copy to be made.

15. DEFINITIONS

    15.1. Claimant: an individual or entity having a direct contract with the CONTRACTOR or with a Subcontractor of the CONTRACTOR to furnish labor, material or equipment for use in the performance of the Contract. The intent of this Bond shall be to include without limitation in the terms "labor, materials or equipment" that part of water, gas, power, light, heat, oil, gasoline, telephone service or rental equipment used in the Contract, architectural and engineering services required for performance of the Work of the CONTRACTOR and the CONTRACTOR's Subcontractors, and all other items for which a mechanic's lien may be asserted in the jurisdiction where the labor, materials or equipment were furnished.

    15.2. Contract: The agreement between the OWNER and the CONTRACTOR identified on the signature page, including all Contract Documents and changes thereto.

    15.3. OWNER Default: Failure of the OWNER, which has neither been remedied nor waived, to pay the CONTRACTOR as required by the Contract or to perform and complete or comply with the other terms thereof.

End of Section

MAINTENANCE AND GUARANTEE BOND

KNOW ALL MEN BY THESE PRESENTS, That we _____ (contractor name), as Principal, and _____, as Surety, are held and firmly bound unto the Charter Township of Ypsilanti, 7200 S Huron River Dr, Ypsilanti MI 48197, as Owner, in the sum of _____ DOLLARS and _____ CENTS ($ _____) good and lawful money of the United States of America, to be paid to said Charter Township of Ypsilanti, its legal representatives and assigns for which payment well and truly to be made, we bind ourselves, our heirs, executors, administrators, successors and assigns, and each and every one of them jointly and severally, firmly by these presents.

Sealed with our seals and dated this _____ day of _____ A.D. 20 _____ .

WHEREAS, the above named Principal has entered into a certain written Contract with Charter Township of Ypsilanti dated this ____ day of _____ A.D. 20 _____ , wherein the said Principal covenanted and agreed to follows, to-wit: TO CONSTRUCT THE WORK IN ACCORDANCE WITH THE SPECIFICATIONS, CONTRACT DOCUMENTS AND DRAWINGS TITLED: Ridge Road Sidewalk, OHM JOB NO. 0098-23-0020.

NOW, THEREFORE, THE CONDITION OF THIS OBLIGATION IS SUCH, that by and under said Contract, the above named Principal has agreed with the Charter Township of Ypsilanti that for a period of TWO year(s) from date of payment of Final Estimate, to keep in good order and repair any defect in all work done under said Contract either by the Principal or his Subcontractors, or his material suppliers, that may develop during said period due to improper materials, defective equipment, workmanship or arrangements, and any other work affected in making good such imperfections, shall also be made good all without expense to the OWNER, excepting only such parts or part of said work as may have been disturbed without consent or approval of the Principal after final acceptance of the work, and that whenever directed to do so by the OWNER by notice served in writing, either personally or by mail, on the Principal at _____ (contractor's city, state, and zip code), _____ legal representatives, or successors, or on the Surety at _____ _____ WILL PROCEED at once to make such repairs as directed by said OWNER; and in case of failure so to do within one week from the date of service of such notice, or within reasonable time not less than one week, as shall be fixed in said notice, then the said OWNER shall have the right to purchase such materials and employ such labor and equipment as may be necessary for the purpose, and to undertake, do and make such repairs and charge the expense thereof to, and receive same from, said Principal or Surety. If any repair is necessary to be made at once to protect life and property, then and in that case, the said OWNER may take immediate steps to repair or barricade such defects without notice to the CONTRACTOR. In such accounting the said OWNER shall not be held to obtain the lowest figures for the doing of the work, or any part thereof, but all sums actually paid therefore shall be charged to the Principal or Surety. In this connection the judgment of the OWNER is final and conclusive. If the said Principal for a period of TWO year(s) from the date of payment of Final Estimate, shall keep said work so constructed under said Contract in good order and repair, excepting only such part or parts of said work which may have been disturbed without the consent or approval of said Principal after final acceptance of same, and shall whenever notice is given as hereinbefore specified, at once proceed to make repair as in said notice directed, or shall reimburse said OWNER for any expense incurred by making such repairs, should the Principal or Surety fail to do as hereinbefore specified, and shall fully indemnify, defend and save harmless the said Owner and Orchard, Hiltz & McCliment, Inc. from all suits and actions for damages of every name and description brought or claimed against it for, or on account of, any injury or damage to person or property received or sustained by any party or parties, by or from any of the acts or omissions or through the negligence of said

Principal, servants, agents or employees, in the prosecution of the work included in said Contract, and from any and all claims arising under the Workman's Compensation Act, so-called, of the State of Michigan, then the above obligation shall be void, otherwise to remain in full force and effect.

IN WITNESS WHEREOF, the parties hereto have caused this instrument to be executed by their respective authorized officers this _____ day of _____ A.D., 20 _____.

Signed, Sealed and Delivered
In the Presence of:

Signature	Signature
Name	Name
	Principal
Signature	Signature
Name	Name
	Surety

CONTRACTOR'S AFFIDAVIT

STATE OF MICHIGAN)

)SS.

COUNTY OF _____)

The undersigned, _____, CONTRACTOR, hereby represents that on _____ , 20_____ he (it) was awarded a Contract by Charter Township of Ypsilanti hereinafter called the OWNER, to construct Ridge Road Sidewalk in accordance with the terms and conditions of Contract No. _____; and the undersigned further represents that the subject work has now been accomplished and the said Contract has now been completed.

The undersigned hereby warrants and certifies that all of his (its) indebtedness arising by reason of said Contract has been fully or satisfactorily secured, and that all claims from subcontractors and others for labor and material used in accomplishing the said project, as well as all other claims arising from performance of said Contract, have been fully paid or satisfactorily secured. The undersigned further agrees that if any such claim should hereafter arise, he (it) shall assume responsibility for same immediately upon request to do so by the OWNER.

The undersigned, for a valuable consideration, receipt of which is hereby acknowledged, does further hereby waive, release and relinquish any and all claims or right of lien which the undersigned now has or may hereafter acquire upon the subject premises for labor and material used in accomplishing said project owned by the OWNER.

This affidavit is freely and voluntarily given with full knowledge of the facts on this _____ day of _____ , 20_____ .

_____

Contractor

By: _____

Title _____

Subscribed and sworn to before me, a Notary Public in and for _____ County, Michigan, on this _____day of _____, 20 _____ .

Notary Public: _____

My Commission expires: _____

CONTRACTOR'S DECLARATION

I HEREBY DECLARE THAT I HAVE NOT, during the period

_____ to

_____ A.D., 20 _____ performed any work, furnished any material, sustained any loss, damage or delay for any reason, including soil conditions encountered or created, or otherwise done anything for which I shall ask, demand, sue for or claim compensation from Charter Township of Ypsilanti or his agents, in addition to the regular items set forth in the Contract numbered ___ and dated _____ A.D., 20 ____ for the Agreement executed between myself and the OWNER, and in the Change Orders for work issued by the OWNER in writing as provided thereunder, except as I hereby make claim for additional compensation and/or extension of time, as set forth on the itemized statement attached hereto.

There (is) (is not) an itemized statement attached.

Date: _____

_____

By: _____

Title: _____

SWORN STATEMENT

State of Michigan
County of: :_____ Date:_____

_____ (deponent) being duly sworn deposes and says:

1. That _____ is the Contractor/Subcontractor for an improvement to the property described on the following page.
2. That the following is a statement of each subcontractor and supplier and laborer, for which the payment of wages or fringe benefits and withholdings is due but unpaid, with whom the Contractor/Subcontractor has Contracted/Subcontracted for performance under the Contract with the Owner or Lessee of the property, and that the amounts due to the persons as of the date hereof are correctly and fully set forth opposite their names as follows:

Name of Subcontractor, Supplier or Laborer	Type of Improvement Furnished	Total Contract Price	Amount Already Paid	Amount Currently Owing	Amount of Laborer Wages Due but Unpaid	Amount of Labor, Fringe Benefits & Withholdings due but Unpaid

The contracts or subcontracts cited herein are for improvement to the following described real property situated in Washtenaw County, Michigan, described as:

(Insert legal description of property) _____

_____

_____

Commonly known as:

Ridge Road Sidewalk

OHM Job Number:

0098-23-0020

3. That the Contractor has not procured material from, or subcontracted with, any person other than those set forth above and owes no money for the improvement other than the sums set forth above.
4. Deponent further says that he makes the foregoing statement as the Contractor/Subcontractor or as Controller of the Contractor/Subcontractor for the purpose of representing to the owner of the above described premises and his agents that the above described property is free from claims of construction liens, or the possibility of construction liens, except as specifically set forth above and except for claims of construction liens by laborers which may be provided pursuant to Section 109 of the Construction Lien Act, Act No. 497 of the Public Acts of 1980, as amended, being Section 570.1109 of the Michigan Compiled Laws.

WARNING TO OWNER: An Owner of the above described property may not rely on this sworn statement to avoid the claim of a Subcontractor, Supplier or Laborer who has provided a Notice of Furnishing (or a Laborer who may provide a Notice of Furnishing pursuant to Section 109 of the Construction Lien Act) to the Designee or to the Owner if the Designee is not named or has died.

Dated: _____ _____

Signature of Deponent

WARNING TO DEPONENT: A person, who with intent to defraud, gives a false sworn statement is subject to criminal penalties as provided in Section 110 of the Construction Lien Act, Act No. 497 of the Public Acts of 1980, as amended, being Section 570.1110 of the Michigan Compiled Laws.

Subscribed and sworn to before me on: _____ in _____County, Michigan

My commission expires: _____ Signature: _____

GENERAL CONDITIONS

Table of Contents

General 3
1. Definitions 3
2. Contract Documents 3
3. Bonds 4
4. Contract Drawings & Specifications 4
5. Coordination of Contract Documents 4
6. Preconstruction Meeting 5
7. Reuse of Documents 5
8. Availability of Lands 5
9. Physical Conditions 6
10. General Requirements of Materials & Workmanship 6
11. Shop Drawings & Special Drawings 6
12. Changes in Quantities or Plans 7
13. Estimated Quantities 7
14. Payments 7
15. Extension of Time 8
16. Authority 9
17. Progress of Work 9
18. Time is Essence of Contract 9
19. Commencement of Contract Time 9
Owner Responsibilities 9
20. Extra & Force Account Work 9
21. Payments Withheld 12
22. Use of Complete Portions of the Work 12
Engineer Responsibilities 12
23. Engineer During Construction 12
24. Authority & Duties of Construction Observer 12
25. Limitations on Engineer's Responsibilities 13
26. Lines & Grades 13
27. Testing & Sampling 13
Contractor Responsibilities 15
28. Unforseen Physical Conditions 15
29. Composition of the Contractor 15
30. Assignment of Contract 15
31. Agents 15
32. Safety & Protection 15
33. Contractor's Supervision & Origination 16
34. Contractor's Right to Stop Work 17
35. Storage of Materials 17
36. Cleaning Up 17
37. Sunday & Night Work 17
38. Sanitary Regulations 17
39. Permits & Regulations 17
40. Guarantee 18
41. Patents 18

42. Information by the Contractor **18**
43. Forfeiture of Contract **18**
44. Relation to Other Contractors **19**
45. "Or Equal" Clause **19**
Legal **19**
46. Indemnification **19**
47. Controlling Law **20**
48. No Waiver of Contract **20**
49. Dispute Resolution **20**
50. Giving Notice **20**
51. Cumulative Remedies **20**

General

1. DEFINITIONS

The following terms as used in the Contract Documents are respectively defined as follows:

"Agreement": The written document between the OWNER and the CONTRACTOR concerning the work to be performed.

"Change Order" - A document recommended by ENGINEER, which is signed by CONTRACTOR and OWNER and authorizes an addition, deletion or revision in the Work, or an adjustment in the Contract Price or the Contract Time, issued on or after the Effective Date of the Agreement.

"Contract" – The entire and integrated written agreement between the OWNER and CONTRACTOR concerning the Work. The Contract supersedes prior negotiations, representations, or agreements, whether written or oral.

"CONTRACTOR": The person, firm or corporation to whom the Contract is awarded by the OWNER and who is subject to the terms thereof and party of the second part of the Agreement.

"ENGINEER": Orchard, Hiltz & McCliment, Inc., Livonia, Michigan

"Construction Observer": The authorized representative of ENGINEER who is assigned to the site or any part thereof.

"OWNER": The public body or authority, corporation, association, firm or person with whom CONTRACTOR has entered into the Agreement: and for whom the work is to be provided; and the party of the first part of the Contract.

"Project Manual" – The bound documentary information prepared for bidding and constructing the Work. A listing of the contents of the Project Manual, which may be bound in one or more volumes, is contained in the table(s) of contents.

"Specifications" - Those portions of the Contract Documents consisting of written technical descriptions of materials, equipment, construction systems, standards and workmanship as applied to the Work and certain administrative details applicable thereto.

"Subcontractor": A person, firm or corporation having a direct contract with CONTRACTOR or with any other subcontractor for the performance of a part of the Work at the site.

"Supplier": A manufacturer, fabricator, supplier, distributor, material man or vendor.

"Supplemental Conditions": The part of the Contract Documents that amends or supplements the General Conditions and/or the Insurance Specifications and the Bond Requirements.

"Work" - The entire completed construction or the various separately identifiable parts thereof required to be furnished under the Contract Documents. Work is the result of performing services, furnishing labor and furnishing and incorporating materials and equipment into the construction, all as required by the Contract Documents.

"Written Notice": Shall be deemed to have been "duly served" when such notice shall have been given or mailed to the CONTRACTOR or his superintendent at the site of the Work or when such notice shall have been given or mailed to the OWNER.

2. CONTRACT DOCUMENTS

The original and three counterparts of the Contract shall be signed by the OWNER and the CONTRACTOR.

The Work under this Contract shall consist of the items listed in the Bid Form, including all incidentals necessary to fully complete the project in accordance with the Contract Documents. The Contract Documents shall consist of the Advertisement, Instructions to Bidders, Supplemental Instructions to Bidders, Supplemental Specifications, Bid Form, Project Plans and Drawings, Standard Plans and Details, Technical Specifications,

General Conditions, General Specifications, Method of Payment, Insurance, Bonds and Agreement.

The Contract Documents comprise the entire agreement between OWNER and CONTRACTOR. The Contract Documents are complimentary, and what is called for by any one shall be as binding as if called for by all. The intent of the Contract Documents is to include in the Contract Price the cost of all labor and material, water, fuel, tools, plant, equipment, light, transportation and all other expenses that may be necessary for the proper execution and completion of the Work.

3. BONDS

The CONTRACTOR shall furnish a surety bond (form included) in an amount at least equal to 100 percent of the Contract Price as security for faithful performance of this Contract. CONTRACTOR shall also furnish a separate surety bond (form included) in an amount at least equal to 100 percent of the Contract Price as security for the payment of all persons performing labor on the project under this Contract, and furnishing materials in connection with this Contract. The Surety on each such bond shall be a duly authorized surety company satisfactory to the OWNER.

The CONTRACTOR shall furnish a Maintenance and Guarantee Bond (form included) covering all Work under this Contract. The guarantee is to cover fifty percent (50%) of the contract amount for a period of two (2) years subsequent to the date of final payment unless otherwise specified.

Should any Surety upon any bond furnished in connection with this Contract become unacceptable to the OWNER, or if any such Surety shall fail to furnish reports as to his financial condition from time to time as requested by the ENGINEER, the CONTRACTOR must promptly furnish such additional security as may be required from time to time by the ENGINEER to protect the interests of the OWNER or persons supplying labor or materials in the prosecution of the Work contemplated by the Contract.

4. CONTRACT DRAWINGS & SPECIFICATIONS

The original drawings prepared by the ENGINEER and included in the Contract Documents may be supplemented by other drawings furnished by the CONTRACTOR and approved by the ENGINEER or supplied to the CONTRACTOR by the ENGINEER during progress of the Work as he may deem to be necessary or expedient. All such supplementary Contract Drawings or instructions are intended to be consistent with the Contract Documents, true developments thereof, and reasonably inferable therefrom. Therefore, no extra charge will be allowed on a claim that particular supplemental contract drawings or instructions differed from the Contract Documents, incurring extra work, unless CONTRACTOR has first brought the matter, in writing, to the ENGINEER's attention for proper adjustment before starting on the work covered by such, and has received from the ENGINEER an order, in writing, to so proceed.

These original and supplemental drawings constitute the drawings according to which the Work is to be done. The CONTRACTOR shall keep at the site of the Work an approved or confirmed copy of all drawings and specifications, and shall at all times give the ENGINEER and OWNER access thereto.

5. COORDINATION OF CONTRACT DOCUMENTS

In case of discrepancy, figured dimensions shall govern over scaled dimensions and the parts of the Contract will prevail over all other parts of the following order:

Supplemental Specifications

Supplemental Instructions to Bidders

Instructions to Bidders

Bid Form

Project Plans and Drawings

Standard Plans & Details

Method of Payment

Technical Specifications

General Conditions

General Specifications

Insurance Specifications and Bond Forms

The CONTRACTOR shall not take advantage of any apparent error or omission in the Contract Documents, and if any inconsistency, omission, or conflict is discovered in the Contract Documents, or if in any place the meaning of the Contract Documents is obscure, uncertain, or in dispute, the ENGINEER will decide as to the true intent.

Information regarding site of the Work given in drawings and specifications has been obtained by the ENGINEER and is believed to be reasonably correct, but the OWNER does not warrant either the completeness or accuracy of such information, and it is the CONTRACTOR's responsibility to verify all such information.

6. PRECONSTRUCTION MEETING

A preconstruction meeting will be held prior to the beginning of any work. The ENGINEER will schedule the meeting as soon as possible after acceptable executed Contract Documents are received from the CONTRACTOR.

Notice of the meeting will be made to the OWNER, the CONTRACTOR, and to the following applicable entities, contingent upon their interest in the project:

Utility Companies

County Road Commission

Michigan Department of Transportation (MDOT)

Michigan Department of Labor-Safety Division

Railroad Companies

Other State, Local and County Agencies

The purpose of the preconstruction meeting is to discuss particular procedures and potential problem areas. The CONTRACTOR is given updates on the conditions of the proposed construction and what is expected as to proper notification in the event of damage to existing utilities.

The CONTRACTOR shall submit in writing at the preconstruction meeting the following information:

Schedule of construction

Sources of materials

Final list of subcontractors

The designated safety officer on the job

Superintendent for the project

Foreman in charge on the job site

Emergency and after hours phone numbers for CONTRACTOR, including Safety Officer, Superintendent and Foreman.

Approval by ENGINEER and OWNER of any construction schedule indicating completion of the work in less time than allotted by the Contract shall not be construed as an acknowledgment, either express or implied, that the work can be completed within the time shown on this schedule, and shall not under any circumstances give rise to a cause of action for damages by the CONTRACTOR.

7. REUSE OF DOCUMENTS

Neither CONTRACTOR nor any subcontractor or supplier or other person or organization performing or furnishing any of the Work under a direct or indirect contract with OWNER shall have or acquire any title to or ownership rights in any of the drawings, specifications or other documents (or copies of any thereof) prepared by or bearing the seal of ENGINEER; and they shall not reuse any of them on extensions of the project or any other project without written consent of OWNER and ENGINEER and specific written verification or adaptation by ENGINEER.

8. AVAILABILITY OF LANDS

OWNER shall furnish, as indicated in the Contract Documents, the lands upon which the work is to be performed, rights-of-way for access thereto, and such other lands which are designated for the use of CONTRACTOR. CONTRACTOR shall provide for all additional lands and access thereto that may be required for temporary construction facilities or storage of materials and equipment.

Permission to use private property shall be obtained prior to any such use by the CONTRACTOR. Written evidence of such permission shall be given to the ENGINEER prior to any such use.

9. PHYSICAL CONDITIONS

Reference is made to the Supplemental Instructions to Bidders for identification of those reports of investigations and tests of subsurface and latent physical conditions at the site or otherwise affecting cost, progress or performance of the Work which have been relied upon by the ENGINEER in preparation of the drawings and specifications. Such reports are not guaranteed as to accuracy or completeness and are not part of the Contract Documents.

10. GENERAL REQUIREMENTS OF MATERIALS & WORKMANSHIP

In the specifications where a particular material or piece of equipment is specified by reference to some particular make or type, or equal, it is not the intent to limit competition but to set up by such reference a standard of quality most easily understood and defined. If materials or equipment of other make or type other than that specified by name are offered by CONTRACTOR they will be given full consideration by the ENGINEER, and the ENGINEER's decision will be final as to whether the materials or equipment offered are equal to those specified.

Unless otherwise stipulated in the specifications, all equipment, materials and articles incorporated in the Work covered by this Contract are to be new and of the best grade of their respective kinds for the purpose. The CONTRACTOR shall, if required, furnish such evidence as to kind and quality of materials as the ENGINEER may require.

The CONTRACTOR shall furnish suitable tools and building appliances and employ competent labor to perform the work to be done, and any labor, tools or appliances that shall not, in the judgment of the ENGINEER, be suitable or competent to produce this result may be ordered from the Work by him, and such labor, tools or appliances shall be substituted therefore by the CONTRACTOR as will meet with the approval of the ENGINEER.

If not otherwise provided, material or work called for in this Contract shall be furnished and performed in accordance with well-known established practice and standards recognized by architects, engineers and the trade.

11. SHOP DRAWINGS & SPECIAL DRAWINGS

Where called for in the specifications, CONTRACTOR shall submit to the ENGINEER for approval in not less than five copies, details, specifications, cuts and drawings of such equipment and structural work as may be required. CONTRACTOR shall make any changes or alterations required by the ENGINEER and resubmit same without delay. Approval of the ENGINEER shall not relieve the CONTRACTOR of responsibility for errors in the drawings, as the ENGINEER's checking is intended to cover compliance with the drawings and specifications and not to enter into every detail of the shop work. No work shall be undertaken until the ENGINEER has approved the shop drawings.

When the work of the CONTRACTOR is of a nature originating with it, full general and detail drawings shall be furnished to the ENGINEER on 24” x 36” size sheets of polyester film base which shall, upon approval, become the property of the OWNER.

It is understood that approval by the ENGINEER of CONTRACTOR's drawings, whether general or detailed, is a general approval relating only to their sufficiency and compliance with waiver of errors, discrepancies or omissions.

12. CHANGES IN QUANTITIES OR PLANS

The OWNER reserves the right to make, by written order, at any time during the Work, such changes in quantities and such alterations in the work as are necessary to satisfactorily complete the project. Such changes in quantities and alterations shall not invalidate the Contract nor release the Surety, and by signing a work order or authorization, the CONTRACTOR agrees to perform the Work as altered and agrees to accept, as payment in full for such Work, the monetary amounts set forth in such written order as balanced by OWNER. In addition, by signing a written order, the CONTRACTOR releases the OWNER from any and all claims for compensation with regard to the items of work specified in the written order; including, but not limited to, any and all claims for delay and overhead, unless the OWNER is notified in writing at the time of signing the authorization that the CONTRACTOR refuses to release the OWNER from such claims. All increases in quantities of work which appear in the Contract as pay items shall be paid for at the Contract Unit Prices. Decreases in quantities included in the Contract shall be deducted from the Contract at the Contract Unit Prices.

13. ESTIMATED QUANTITIES

The quantities of various classes of work to be done and materials to be furnished under this Contract, which have been estimated as stated elsewhere herein, are approximate and only for the purpose of comparing, on a uniform basis, the bids offered for work under this Contract; and neither the OWNER nor the ENGINEER is to be held responsible should any of the said estimated quantities be found incorrect during the construction of the work; and the CONTRACTOR shall make no claim for anticipated profit, nor for loss of profit, because of a difference between the quantities of the various classes of work actually done or materials actually delivered, and the estimated quantities as herein stated.

14. PAYMENTS

Payments for work completed, as recommended by the ENGINEER, will be made as specified herein.

Partial Payments

CONTRACTOR shall submit to OWNER an application for each payment and shall submit a Contractor’s Declaration declaring that he has not performed any work, furnished any material, sustained any loss, damage or delay for any reasons, including soil conditions encountered or created, or otherwise done anything for which he will ask, demand, sue for, or claim compensation from the OWNER other than as indicated on the Contractor’s Declaration and shall, if required, submit receipts or other vouchers showing his payments for materials and labor, including payments to subcontractors.

Payments, based on progress estimates, will be made on a monthly basis on work completed during the preceding month, less retainage held in accordance with Public Act No. 524 of 1980.

The retainage shall be as follows:

Not more than ten percent (10%) of the dollar value of all work in place until work is fifty percent (50%) in place.

After the work is fifty percent (50%) in place, additional retainage shall not be withheld unless the OWNER determines that the CONTRACTOR is not making satisfactory progress, or for other specific cause relating to the CONTRACTOR’s performance under the Contract. If the OWNER so determines, then the retainage amount shall not be more than ten percent (10%) of the dollar value of work more than fifty percent (50%) in place.

Retainage shall be released to CONTRACTOR together with the final progress payment.

The OWNER may withhold payment of any estimate or portion of estimate until the CONTRACTOR shall have furnished satisfactory evidence that he has paid all claims of every nature. The CONTRACTOR shall submit to the OWNER with each application for payment a “Sworn Statement” attesting to all payments made and balances due to all subcontractors and to all suppliers of materials, fuel, and equipment for the project work completed. He shall also attest to all payments made for labor furnished for the work completed. The “Sworn Statement” shall be in a form acceptable to the OWNER and all suppliers and subcontractors shall be listed along with payments made and balances owed to each.

No partial payment shall be considered as acceptance of the work or any portion thereof prior to final completion of the work, and payment of final estimate.

Final Payment

The CONTRACTOR's request for final payment shall be accompanied by the following documents:

Contractor’s Declaration

Contractor’s Affidavit

Unconditional waivers, as required, from major suppliers and subcontractors

Release of Surety

Release from other public agencies for which permits have been obtained under this Agreement.

Within thirty (30) days after completion of the work under this Agreement to the satisfaction of the OWNER and ENGINEER, in accordance with all and singular terms and stipulations herein contained, the OWNER shall make final payment, from a final estimate made by the ENGINEER. Before final payment is made, the CONTRACTOR shall, as directed by the OWNER, make a Contractor’s Affidavit that he has paid all claims of every nature, or secured a release from the Surety or Sureties approving payment of the final estimate by the OWNER. Final payment, when made, shall be considered as final approval and acceptance of the completed work herein specified.

The acceptance by the CONTRACTOR of final payment aforesaid shall operate as, and shall be, a release to the OWNER and his agents, from all claim and liability to the CONTRACTOR for anything done or furnished for, relating to, or affecting the work.

Incorrect/Improper Payments

OWNER shall not, nor shall any officer thereof, be precluded or stopped by any return or certificate made or given by the ENGINEER, or other officer, agent or appointee, under the provision of this Agreement, at any time (either before or after final completion and acceptance of the work and payment made therefore pursuant to any such return or certificates showing the true and correct amount of money due therefore, notwithstanding any such return or certificate, or any payment made in accordance therewith) from demanding and receiving from the CONTRACTOR or his sureties, separately or collectively, such sums as may have been improperly paid said CONTRACTOR by reason of any such return or certificate which has been untruly or incorrectly compiled.

15. EXTENSION OF TIME

All days in which work is suspended by order of the ENGINEER, or in accordance with these specifications, shall automatically extend the time for completion an equal number of days.

In the event work is suspended because the CONTRACTOR does not perform, no extension will be allowed for this period of time.

All requests from CONTRACTOR for extensions of time shall be submitted in writing. Such requests shall detail the reason for the request, provide a realistic revised completion date, and indicate any other

areas which may be impacted by such an extension. Such requests must be submitted to the field ENGINEER within ten (10) days after the occurrence of the incident or situation that brought about a reason for extending the time of completion. The final decision of whether or not to grant an extension of time will be made by the field ENGINEER. In no case will a request be considered if it is submitted after the ten (10) day period has passed.

16. AUTHORITY

No officer, agent or employee of the OWNER shall have power to revoke, alter, enlarge, or relax the stipulations or requirements of the Contract Documents, except insofar as such authority may be specifically conferred by the Contract Documents themselves, without formal authorization to do so, conferred by the Agreement, or by ordinance, resolution or other usual official action by the OWNER.

17. PROGRESS OF WORK

The work shall be prosecuted regularly and uninterruptedly, unless the OWNER shall otherwise specifically direct, with such force and at such points as to insure its full completion within the time stated herein.

If, in the opinion of the ENGINEER, it is necessary or advisable that certain portions of the work be done immediately, the CONTRACTOR, upon written order shall proceed with such work without delay. Should he fail to so proceed, the OWNER may do or cause to be done, such work, and the cost of same will be deducted from any money due or to become due the CONTRACTOR under this Agreement.

18. TIME IS ESSENCE OF CONTRACT

It is distinctly understood and agreed to by the parties hereto that the time specified for completion of the Work is the essence of this Agreement, and CONTRACTOR shall not be entitled to claim performance of this Agreement unless the work is satisfactorily completed, in every respect, within the time herein specified.

19. COMMENCEMENT OF CONTRACT TIME

The Contract Times will commence to run on the thirtieth day after the Effective Date of the Agreement or, if a Notice to Proceed is given, on the day indicated in the Notice to Proceed. A Notice to Proceed may be given at any time within thirty (30) days after the Effective Date of the Agreement. In no event will the Contract Times commence to run later than the sixtieth (60) day after the day of Bid Opening or the thirtieth (30) day after the Effective Date of the Agreement, whichever date is earlier.

Owner Responsibilities

20. EXTRA & FORCE ACCOUNT WORK

When extra work is required, it shall be performed and payment for such work will be on the unit price or lump sum basis agreed to in a written order. When such agreement cannot be reached, the OWNER may order such work, including any required offsite work, to be done by force account. The compensation as herein provided shall be accepted by the CONTRACTOR as payment in full for extra work done by force account, and the said percentages shall cover profit, superintendence, general expense, overhead, miscellaneous unforeseen costs, and the use of small tools and equipment. For approved subcontract work, the CONTRACTOR will be paid an amount equal to six percent (6%) of the total cost of the subcontract work, as reimbursement for administrative costs incurred in connection with the subcontract work.

When it is necessary for the CONTRACTOR to hire a firm to perform a specialized type of work or service for which the CONTRACTOR or subcontractors are not qualified to do, payment will be made at the invoice cost. The CONTRACTOR will be paid an amount equal to six percent (6%) of the invoice cost, as reimbursement for administrative costs. Prior approval by the OWNER is required.

REPORTS:

The CONTRACTOR shall furnish to the OWNER, itemized reports of the costs of all force account work. The reports shall be furnished each week and shall include a certified copy of the weekly payroll and copies of bills for the materials used and the freight charges paid on same. Discount for prompt payment or penalty for late payment will not be considered in determining the net amount of the bill. The net amount of the bill shall be charged to the force account work. Where materials used are not specifically purchased for use on extra work but are taken from the CONTRACTOR's stock, the CONTRACTOR shall submit a certification of the quantity, price, and freight on such materials in lieu of original bills and invoices.

The CONTRACTOR shall prepare itemized statements containing the following detailed information:

Labor: Name, classification, dates, number of hours worked each day, total hours computed to nearest half hour, total hours, rate, and extension for each employee engaged.

Equipment: Designation, number of hours used each day (computed to nearest half hour), total hours, rental rate, and extension for each unit of equipment engaged.

Materials: Quantities of materials, with prices per unit and extensions and freight costs when applicable.

The CONTRACTOR and the OWNER shall compare records of force account work and bring them into agreement at the end of each day.

LABOR:

For all labor and for all craft foreman directly engaged in the specific work, the CONTRACTOR will be paid the actual rate of wages and the number of hours paid said labor and foremen in accordance with approved labor agreements, computed to nearest half hour, to which sum twenty-six (26) percent will be added (this sum includes a one (1) percent allowance for the Single Business Tax). Project foremen will be classified as Superintendents and their compensation will not be included in the payment provided herein.

Bond Premium: Workmen's Compensation Insurance; Personal Injury Public Liability and Property Damage Public Liability Insurance; Unemployment Compensation; Federal Social Security; and payments required to be made to Employer and Employee Trusteeships, the proceeds from which accrue exclusively to the benefit of the employee; will be paid for at actual cost, to which sum twenty (20) percent will be added except that twenty-six (26) percent will be added to the taxable fringe benefits. The CONTRACTOR shall furnish satisfactory evidence of the amounts paid for each of these required costs as related to force account work.

MATERIALS:

For materials, the CONTRACTOR will receive the actual cost delivered to the project site, including freight charges, as shown by copies of bills, to which sum fifteen (15) percent will be added.

If a charge in the amount or type of force account work results in a surplus of the material ordered and delivered to the project site, the OWNER will reimburse the CONTRACTOR for the costs incurred in returning the surplus material to the supplier.

SMALL HAND & POWER TOOLS:

No payment will be allowed for small hand and power tools which are not listed in the Rental Rate Blue Book for Construction Equipment as published by the Equipment Guide Book Company. All small hand and power tools listed in the Rental Rate Blue Book at a rate of less than one (1) dollar per hour will be considered part of overhead and will not be paid for separately.

EQUIPMENT:

For any machinery and equipment, including the foreman's transportation unit, which the OWNER approves for use on extra work

done by force account, the CONTRACTOR will be paid as follows:

The time paid for shall be the period that the equipment is required at the site of the extra work and, in addition, shall include traveling time to the location of the extra work when the equipment is moved under its own power. When transportation from one site to another is by other than its own power, the actual operating time during periods of loading and unloading will be paid for at the regular rental rate and transportation costs will be allowed.

When the periods of work are not consecutive and the interval between the termination of a period of work and the commencement of the subsequent period does not exceed thirty (30) days, the rates allowed will be the same as if the periods of work were consecutive.

The rental rate established for each piece of CONTRACTOR owned equipment, including appurtenances and attachments to equipment used will be determined by use of the Rental Rate Blue Book for Construction Equipment Volume 1, 2, or 3, as applicable. The edition which is current at the time the force account work was started will apply.

The established rental rate will be equal to the “Monthly” rate divided by 176; modified by the rate adjustment factor and the applicable map adjustment factor, plus the “Estimated Operating Costs per Hour”, to which sum ten (10) percent will be added.

For equipment not listed in the Rental Rate Blue Book, Volume 1, 2, or 3, the rental rate will be determined by using the rate listed for a similar piece of equipment or by proportioning a rate listed so that the capacity, size, horsepower, and age are properly considered.

For equipment for which there are no comparable in the Rental Rate Blue Book, Volume 1, 2, or 3, the monthly rate shall be reasonable, but not more than five (5) percent of the current list price, or invoice, of the equipment. The base hourly rate shall then be determined by dividing the monthly rate by 176 to which sum twenty percent (20%) will be added. The twenty percent (20%) includes adjustments and operating costs.

The rates used for CONTRACTOR owned trucks used to haul material will be those published by MDOT. These rates shall include all adjustments and operating costs. Separate payment for the driver will be allowed. The rates will be reviewed and adjusted periodically.

The rental rate for the foreman's transportation unit will be seven dollars ($7.00) per hour, to which sum twenty percent (20%) will be added.

When leased or rented equipment is used on force account work, the hourly rate used in computation of payment will be the leased or rented rate, except that if the leased or rented rate exceeds the rental rate established by the Rental Blue Book, the established rate determined from the Blue Book will apply. In either case, the Estimated Operating Cost per Hour will be added to the appropriate hourly rate to which sum ten percent (10%) will be added.

In all cases the “Estimated Operating Cost per Hour” includes all fuel, oil, lubrications, tires, parts, and other operating expendables such as truck and labor assigned to the truck for servicing the equipment.

The rental rates allowed herein include the cost of insurance covering the usual insurable risks, including fire and theft. The OWNER will not be liable for losses which can be covered by insurance.

In the event that machinery or equipment is idled, payment may be allowed on a rental basis for the idled equipment as specified herein. Only machinery or equipment actually on the project site at the time of the delay, as required for that phase of construction work in question, will be considered eligible for rental reimbursement. Specialized equipment for machinery directly related to the work, whether on or off the site, may be considered eligible for payment if actually idled and if such idleness can be certified by the CONTRACTOR and verified by the

OWNER. Payment for idled equipment and/or machinery will not be allowed during periods of seasonal suspension of the work.

The rental rate for idled leased or rented equipment will be the leased or rented rate,or the equipment shall be returned and taken off rental as directed by the OWNER.

The rental rate for idled CONTRACTOR owned equipment will be the "Monthly" rate divided by 176; modified by the rate adjustment factor and the applicable map adjustment factor, and then multiplied by fifty percent (50%). No payment will be allowed for operating costs.

Payment will be limited to the difference between the hours worked and eight (8) hours in any one day and to the difference between the hours worked and forty (40) hours in any one week. No provisions of these specifications shall entitle the CONTRACTOR to rental compensation for idled equipment. No additional compensation for overhead will be allowed.

In the event that labor is idled, payment may be allowed provided there is no other location within the project that the labor can be gainfully employed. Payment will be limited to a maximum of eight (8) hours per occurrence and in no case will exceed the amount of the CONTRACTOR's obligation as provided by the CONTRACTOR's current labor agreement. No additional compensation for overhead will be allowed.

21. PAYMENTS WITHHELD

The OWNER may withhold or, on account of subsequently discovered evidence, nullify the whole or a part of any certificate for progress payment to such extent as may be necessary to protect itself from loss on account of:

Defective work not remedied;

Claims filed or reasonable evidence indicating probable filing of claims;

Failure of the CONTRACTOR to make payments properly to subcontractors or for material or labor;

A reasonable doubt that the Agreement can be completed for the balance then unpaid;

Damage to another CONTRACTOR.

When the above grounds are removed, payment shall be made for amounts withheld because of them.

22. USE OF COMPLETE PORTIONS OF THE WORK

The OWNER may, at any time during progress of the work, after written notice to CONTRACTOR, take over and place in service any completed portions of the work which are ready for service, although the entire work of the Agreement is not fully completed, and notwithstanding the time for completion of the entire work or such portions may not have expired. In such event, the CONTRACTOR will be relieved of further work on, or maintenance of, said portion except as covered by his guarantee of same.

Engineer Responsibilities

23. ENGINEER DURING CONSTRUCTION

The Work shall be subject to the approval of the ENGINEER, who shall determine the amount, quality, acceptability, and fitness of the items of work and materials to be furnished hereunder, and who shall decide all questions which may arise as to measurements of quantities and fulfillment of the requirements of the Contract Documents.

24. AUTHORITY & DUTIES OF CONSTRUCTION OBSERVER

Construction Observers may be appointed by the ENGINEER and directed to check or review materials used and completed work. The observation may extend to any parts of the Work and to the preparation or manufacture of the materials for use in the Work. Construction Observers will not be authorized to revoke, alter, enlarge, or relax any of the provisions of the Contract Documents. The Construction Observer will call to the attention of the CONTRACTOR any failure to follow the plans and

specifications that he may observe. In case of any dispute arising between the CONTRACTOR and Construction Observer as to materials furnished or the manner of performing the work, the Construction Observer shall have the authority to reject materials or completed items of work until the question at issue can be referred to and be decided by the ENGINEER. In no instance shall any action or omission on the part of the Construction Observer relieve the CONTRACTOR of the responsibility of completing the Work in accordance with the Contract Documents.

25. LIMITATIONS ON ENGINEER'S RESPONSIBILITIES

Neither ENGINEER's authority or responsibility under this Article or under any other provision of the Contract Documents nor any decision made by ENGINEER in good faith either to exercise or not exercise such authority or responsibility or the undertaking, exercise or performance of any authority or responsibility by ENGINEER shall create, impose or give rise to any duty owed by ENGINEER to CONTRACTOR, any subcontractor, any supplier, any other person or organization, or to any surety for or employee or agent of any of them.

ENGINEER will not supervise, direct, control or have authority over or be responsible for CONTRACTOR's means, methods, techniques, sequences or procedures of construction, or the safety precautions and programs incident thereto, or for any failure of CONTRACTOR to comply with laws and regulations applicable to the furnishing or performance of the Work. ENGINEER will not be responsible for CONTRACTOR's failure to perform or furnish the Work in accordance with the Contract Documents.

ENGINEER will not be responsible for the acts or omissions of CONTRACTOR or of any subcontractor, any supplier, or of any other person or organization performing or furnishing any of the Work.

ENGINEER's review of the final application for payment and accompanying documentation and all maintenance and operating instructions, schedules guarantees, bonds and manufacturer's certificates of inspection, tests, and approvals and other documentation required in Article 14b will only be to determine generally that their content complies with the requirements of, and in the case of manufacturer's certificates of inspections, tests and approvals that the results certified indicate compliance with the Contract Documents.

The limitations upon authority and responsibility set forth in this Section shall also apply to ENGINEER's consultants, authorized representative and assistants.

26. LINES & GRADES

Principal reference lines or points and bench marks may be given by the ENGINEER at such time as he may deem necessary; or, if the CONTRACTOR shall be in need of such reference lines or bench marks, he shall notify the ENGINEER three (3) working days in advance.

The ENGINEER may set suitable stakes and marks showing locations and elevations of the various parts of the work, and will furnish the CONTRACTOR with required data referring to the reference points. No work shall be undertaken until such stakes and marks shall have been set by the ENGINEER. CONTRACTOR shall take due and proper precautions for the preservation of these stakes and marks, shall see that the work at all times proceeds in accordance therewith, and shall provide all labor and material to set the required line and grade control and locate the work accurately with reference to the above points. In case such stakes are destroyed due to the CONTRACTOR's carelessness, they will be replaced at the ENGINEER's earliest convenience and the CONTRACTOR may be back charged for the crew time incurred.

27. TESTING & SAMPLING

Where called for in the specifications, samples of materials in the quantity named shall be submitted to the ENGINEER for approval. Where tests are required, they

shall be made at the expense of the OWNER, except as otherwise called for in the specifications. For materials covered by ASTM or Federal Specifications, or with the specifications of well known or recognized technical and/or trade organizations, unless otherwise stipulated, required tests are to be made by the manufacturer, and his certificate therefore submitted to the ENGINEER.

The ENGINEER and/or OWNER shall determine which materials are required by the specifications to be factory certified or to have chemical or physical analysis or other examination or test. The CONTRACTOR shall furnish to the ENGINEER and/or OWNER two copies of orders for all materials requiring such examination or test as soon as placed. Such orders shall contain complete information, including that as to the quantity, quality, dimensions, sizes, capacities and types, shall contain proper reference to the applicable specifications by title, number and paragraph, and shall show the name and address of the producing factory but need not contain prices or contractual terms.

All materials and workmanship (if not otherwise designated by the specifications) shall be subject to examination and test by the ENGINEER and/or OWNER at any time during manufacture or construction, and at any place where such manufacture or construction is carried on. The ENGINEER and/or OWNER shall have the right to reject defective material and workmanship or require its correction. Rejected workmanship shall be satisfactorily corrected, and rejected material shall be satisfactorily replaced with proper material without charge therefore, and the CONTRACTOR shall promptly segregate and remove rejected material from the premises. If the CONTRACTOR fails to proceed at once with replacement of rejected material and correction of defective workmanship, the OWNER may, by Agreement or otherwise, replace such material and correct such workmanship and charge the cost thereof to the CONTRACTOR, or may immediately terminate the Agreement.

CONTRACTOR shall furnish promptly, without additional charge, all reasonable facilities, labor and materials necessary for the safe and convenient conduct of all construction observations and tests that may be required by the ENGINEER. All construction observations and tests by the ENGINEER and/or OWNER shall be performed in such a manner as not to delay the work unnecessarily. Special, full size, and performance tests shall be as described in the specifications. CONTRACTOR shall be charged with any additional cost of construction observations when material or workmanship is not ready at the time checking is requested by the CONTRACTOR.

Should it be considered necessary or advisable by the ENGINEER and/or OWNER any time before final acceptance of the entire work to make an examination of work already completed, by removing or tearing out same, the CONTRACTOR shall on request promptly furnish all necessary facilities, labor and material. If such work is found to be defective or nonconforming in any material respect, due to the fault of the CONTRACTOR or his subcontractor, CONTRACTOR shall defray all the expenses of such examination and of satisfactory reconstruction, and be responsible for any resulting delay. If, however, such work is found to meet the requirements of the Agreement, the actual cost involved in the examination and replacement shall be allowed the CONTRACTOR and he shall in addition, if completion of the work has been delayed thereby, be granted a suitable extension of time on account of the additional work involved.

Examination of material and finished articles to be incorporated in the work at the site shall be made at place of production, manufacture or shipment stated in the specifications; and such examinations and acceptance, unless otherwise stated in the specifications, shall be final, except as

regards latent defects, departures from specific requirements of the Agreement and the specifications and drawings made a part thereof, damage or loss in transit, fraud or such gross mistakes as amount to fraud. Subject to requirements contained in the preceding sentence, examinations of material and workmanship for final acceptance as a whole or in part shall be made at the site.

Contractor Responsibilities

28. UNFORSEEN PHYSICAL CONDITIONS

CONTRACTOR shall promptly notify the OWNER and ENGINEER in writing of any subsurface or latent physical conditions at the site or in an existing structure differing materially from those indicated or referred to in the Contract Documents. The ENGINEER will promptly review those conditions and advise the OWNER in writing if further investigation or tests are necessary. Promptly thereafter, the OWNER shall obtain the necessary additional investigations and tests and furnish copies to the ENGINEER and the CONTRACTOR. If the ENGINEER finds that the results of such investigations or tests indicate that there are subsurface or latent physical conditions which differ materially from those intended in the Contract Documents, and which could not reasonably have been anticipated by the CONTRACTOR, a Change Order may be issued incorporating the necessary revisions.

29. COMPOSITION OF THE CONTRACTOR

If the CONTRACTOR hereunder is comprised of more than one legal entity, each such entity shall be jointly and severally liable hereunder.

30. ASSIGNMENT OF CONTRACT

The CONTRACTOR shall not sublet, assign or transfer this Agreement or any portion thereof or any payments due him thereunder, without the written consent of the OWNER.

Assignment or subletting the whole or any portion of this Agreement shall not operate to release the CONTRACTOR or his bondsmen hereunder from any of the contract obligations.

The CONTRACTOR agrees that he is fully responsible to the OWNER for the acts and omissions of his subcontractors and of persons either directly or indirectly employed by him. Nothing contained in the Contract Documents shall create any contractual relation between any subcontractors and the OWNER.

Neither the ENGINEER nor any officer, agent or employee of the OWNER shall have any power or authority whatsoever to bind the OWNER or to incur obligation in his behalf to any subcontractors, material supplier or other persons in any manner whatsoever.

31. AGENTS

Work shall be carried on under personal supervision of the CONTRACTOR or his properly authorized representative, who shall be on the grounds at all times during the construction, and who shall have full and responsible charge of the Work with power to receive orders and carry out instructions.

32. SAFETY & PROTECTION

A. People and Property

CONTRACTOR shall be solely responsible for initiating, maintaining and supervising all safety precautions and programs in connection with the Work. CONTRACTOR shall take all necessary precautions for the safety of, and shall provide the necessary protection to prevent damage, injury or loss to:

All persons on the site or who may be affected by the Work;

All the Work and materials and equipment to be incorporated therein, whether in storage on or off the site; and

Other property at the site or adjacent thereto, including trees, shrubs, lawns, walks, pavements, roadways, structures, utilities, and Underground Facilities not designated for removal, relocation, or replacement in the course of construction.

B. Site Safety

CONTRACTOR shall comply with all applicable laws and regulations relating to the safety of persons or property, or to the protection of persons or property from damage, injury, or loss; and shall erect and maintain all necessary safeguards for such safety and protection. CONTRACTOR shall notify owners of adjacent property and of underground facilities and other utility owners when prosecution of the Work may affect them, and shall cooperate with them in the protection, removal, relocation, and replacement of their property. All damage, injury, or loss to any property referred to in this section caused, directly or indirectly, in whole or in part, by CONTRACTOR or any subcontractor, supplier, or any other individual or entity directly or indirectly employed by any of them to perform any of the Work, or anyone for whose acts any of them may be liable, shall be remedied by CONTRACTOR. CONTRACTOR's duties and responsibilities for safety and for protection of the Work shall continue until such time as all the Work is completed and ENGINEER has issued a notice to OWNER and CONTRACTOR that the Work is acceptable (except as otherwise expressly provided in connection with Substantial Completion).

C. Safety Representative

CONTRACTOR shall designate a qualified and experienced safety representative at the site whose duties and responsibilities shall be the prevention of accidents and the maintaining and supervising of safety precautions and programs.

D. Hazard Communication Program

CONTRACTOR shall be responsible for coordinating any exchange of material safety data sheets or other hazard communication information required to be made available to or exchanged between or among employers at the site in accordance with laws or regulations.

E. Compliance with MIOSHA

All of the CONTRACTOR and subcontractors operations and construction equipment shall comply with requirements of the Michigan Occupational Safety and Health Act (MIOSHA) insofar as they apply to the work to be performed under this Contract.

33. CONTRACTOR'S SUPERVISION & ORIGINATION

The Work under this Agreement shall be under the direct supervision and direction of the CONTRACTOR. The CONTRACTOR shall give sufficient supervision to the Work, using his best skill and attention. The CONTRACTOR shall, at all times, keep on the site of the Work during its progress a competent superintendent and any and all necessary foremen and assistants. The superintendent shall represent and have full authority to act for the CONTRACTOR in the latter's absence, and all directions given to him shall be as binding as if given to the CONTRACTOR. On written request in each case, all such directions will be confirmed in writing to the CONTRACTOR.

The CONTRACTOR shall employ only competent, efficient workmen and shall not use on the Work any unfit person or one not skilled in the work assigned to him, and he shall at all times enforce strict discipline and good order among his employees. Whenever the ENGINEER shall notify the CONTRACTOR, in writing, that any man on the Work is, in the opinion of the ENGINEER, careless, incompetent, disorderly, or otherwise unsatisfactory, such man shall be discharged from the work and shall not again be employed on it except with the written consent of the ENGINEER.

The CONTRACTOR shall establish and maintain an office on the site of the work, or at some convenient point adjacent thereto, during the continuance of this Agreement and shall have at all times during working hours, a representative authorized to receive and execute any and all orders, when given by the ENGINEER; and such order, when given out and received by said representative shall be deemed to have been

given to and received by the CONTRACTOR. Copies of the drawings and specifications shall at all times be kept on file by the CONTRACTOR at readily accessible points near the work.

34. CONTRACTOR'S RIGHT TO STOP WORK

If the work should be stopped under an order of any court, or other public authority for a period of three months, through no act or fault of the CONTRACTOR or of anyone employed by him, or if the OWNER should fail to pay to the CONTRACTOR within sixty (60) days of its maturity and presentation any sum certified by the ENGINEER, provided no appeal is taken, the CONTRACTOR may, upon seven (7) days' written notice to the OWNER and the ENGINEER, stop work or terminate this Agreement, and shall receive from the OWNER payment in full for all work executed, as determined from the prices contained in the approved detailed estimate as computed by the ENGINEER, but no claim for extra compensation or damages shall be made or allowed because of such termination of the Agreement.

35. STORAGE OF MATERIALS

Materials and equipment distributed, stored and placed upon or near the site of the Work shall at all times be so disposed as not to interfere with work being prosecuted by other contractors in the employ of the OWNER, or with street drainage, or with fire hydrants or with access thereto, and not to hinder any more than may be necessary the ordinary traffic (either vehicular or pedestrian) of the street.

36. CLEANING UP

The CONTRACTOR shall, as directed by the ENGINEER, remove at his own expense from the OWNER's property and from all public and private property all temporary structures, rubbish and waste materials resulting from his operations. This requirement shall not apply to property used for permanent disposal of rubbish or waste materials in accordance with permission of such disposal granted to the CONTRACTOR by the OWNER thereof.

37. SUNDAY & NIGHT WORK

The CONTRACTOR is required to prosecute work done under this Agreement during the hours of daylight, and no work will be permitted at night or on Sundays, except to save property or life, or as specifically authorized or directed by the ENGINEER.

No work shall be permitted on holidays.

38. SANITARY REGULATIONS

Sanitary conveniences for the use of project personnel properly secluded from public observation shall be constructed and maintained in sanitary condition by the CONTRACTOR. Its use shall be strictly enforced.

39. PERMITS & REGULATIONS

The CONTRACTOR shall secure, at no cost to the OWNER, all permits and licenses necessary for the prosecution of the Work. He shall pay for same at his own expense as well as for any inspection fees required in connection with such permits, and shall conduct his operations in accordance with the provisions of such permits, including tunneling of pavements where required. He shall also furnish any required bonds and pay the cost of same.

The CONTRACTOR shall keep himself fully informed of all laws, ordinances, and regulations in any manner affecting those engaged or employed in the Work or materials used in the Work, or in any way affecting the conduct of the Work, and of all orders and decrees of bodies or tribunals having any jurisdiction or authority over the same.

He shall at all times observe and comply with, and shall cause all his agents and employees to observe and comply with all existing and future laws, ordinances, regulations, orders and decrees; provided, that if the drawings and specifications are at variance therewith, the CONTRACTOR shall promptly notify the ENGINEER in

writing and any necessary changes shall be adjusted as provided in the Contract Documents.

All work shall be executed and checked in accordance with all local and state rules and regulations and all established codes applicable thereto and shall conform in all respects to the requirements of all competent authorities having jurisdiction there over.

Should any change in plans and specifications be required to comply with local regulations, CONTRACTOR shall notify the OWNER at the time of submitting his bid. After entering into Agreement, CONTRACTOR will be held to complete the work necessary to meet local requirements without extra expense to the OWNER.

Where the work required by the drawings and specifications is above the standard required, it shall be done as shown or specified.

40. GUARANTEE

The CONTRACTOR, as a condition precedent to final payment, shall execute a guarantee to the OWNER warranting for a period of two (2) years from date of final payment to keep in good order and repair any defect in all the work done under the Agreement, either by the CONTRACTOR, his subcontractors, or material suppliers, that may develop during said period due to improper materials, defective equipment, improper materials workmanship, or arrangements, and any other work affected in making good such imperfections shall also be made good, all without expense to the OWNER, and CONTRACTOR shall execute, in favor of the OWNER the attached Maintenance and Guarantee Bond.

41. PATENTS

CONTRACTOR shall pay all royalties and license fees and shall hold and save the OWNER and his agents harmless from all liability of any nature or kind, including cost and expenses for, or on account of, any patented or unpatented invention, process, article or appliance manufactured or used in performance of the Agreement, including its use by the OWNER, unless otherwise specifically stipulated in the Contract Documents. In this respect the CONTRACTOR shall defend all suits or claims for infringement of any patent or license right.

In the event that any claim, suit or action at law or inequity of any kind whatsoever is brought against the OWNER, involving any such patents or license rights, then the OWNER shall have the right to, and may retain, from any money due or to become due to the CONTRACTOR, such sufficient sum as is considered necessary to protect said OWNER against loss, and such sum may be retained by the OWNER until such claim or suit shall have been settled and satisfactory evidence to that effect shall have been furnished the OWNER.

42. INFORMATION BY THE CONTRACTOR

The CONTRACTOR shall submit to the ENGINEER full information as to the materials, equipment and arrangements that the CONTRACTOR proposes to furnish. This information shall be complete to the extent that the ENGINEER may intelligently judge if the proposed materials, equipment and arrangements will meet with the requirements of the Contract Documents.

Prior to approval of the materials, equipment and arrangements by the ENGINEER, based on the information submitted by the CONTRACTOR, any work done by the CONTRACTOR shall be at his own risk.

Approval of information covering materials, equipment and arrangements by the ENGINEER shall in no way release CONTRACTOR from his responsibility for the proper design, installation and performance of any material, equipment or arrangement, or from his liability to replace same should it prove defective.

43. FORFEITURE OF CONTRACT

If work to be done under the Contract Documents shall be abandoned by CONTRACTOR or if, at any time in the

judgment of the OWNER, CONTRACTOR shall fail to prosecute the Work at a reasonable rate of progress, or to comply with all or any of the terms and requirements herein set forth, then the OWNER shall have the right to take possession of the Work, including CONTRACTOR's plant, supplies and materials, at any time after having notified the CONTRACTOR, in writing, to discontinue work under this Agreement for said cause or causes, and such action shall not affect the right of the OWNER to recover damages resulting from such failure. Upon receiving such notice the CONTRACTOR shall and will, upon demand, immediately give the OWNER safe and peaceable possession of the Work, including the plant, and shall then cease to have control over any portion thereof or the men employed thereon.

The OWNER may then proceed to complete the Work herein specified, by Agreement or otherwise; and the entire cost of same shall be charged to the CONTRACTOR and deducted from any sum or sums due or to become due under the Agreement; the excess cost, if any, to be paid by CONTRACTOR or his sureties to said OWNER.

44. RELATION TO OTHER CONTRACTORS

CONTRACTOR shall so conduct his operations as not to interfere with or injure the work of other contractor's or workmen employed on adjoining or related work, and he shall promptly make good any injury or damage which may be done to such work by him or his employees or agents. Should a contract for adjoining work be awarded to another contractor, and should the work of one of these contracts interfere with that of the other, the OWNER shall decide which contractor shall cease work for the time being and which shall continue, or whether work in both contracts shall continue at the same time and in what manner.

45. “OR EQUAL” CLAUSE

Whenever, in any of the Contract Documents an article, material or equipment is defined by describing a proprietary product or by using the name of a manufacturer or vendor, the term “or equal”, if not inserted, shall be implied. The specific article, material or equipment mentioned shall be understood as indicating the type, function, minimum standard of design, efficiency and quality desired, and shall not be construed in such a manner as to exclude manufacturers' products of comparable quality, design and efficiency. If the CONTRACTOR proposes any “or equal” substitutes, these substitutes shall be subject to the review and approval of the OWNER before they can be incorporated into the work.

Legal

46. INDEMNIFICATION

To the fullest extent permitted by Laws and Regulations, CONTRACTOR shall indemnify and hold harmless OWNER and ENGINEER and their consultants, agents and employees from and against all claims, damages, losses and expenses, direct, indirect or consequential (including but not limited to fees and charges of engineers, architects, attorneys and other professionals and court and arbitration costs) arising out of or resulting from the performance of the Work, provided that any such claim, damage, loss or expense (a) is attributable to bodily injury, sickness, disease or death, or to injury to or destruction of tangible property (other than the Work itself) including the loss of use resulting therefrom and (b) is caused in whole or in part by any negligent act or omission of CONTRACTOR, any subcontractors, any person or organization directly or indirectly employed by any of them to perform or furnish any of the Work or anyone for whose acts any of them may be liable, regardless of whether or not it is caused in part by a party indemnified hereunder or arises by or is imposed by Law and Regulations regardless of the negligence of any such party.

In any and all claims against OWNER or ENGINEER or any of their consultants,

agents or employees by any employee of CONTRACTOR, any subcontractors, any person or organization directly or indirectly employed by any of them to perform or furnish any of the Work or anyone for whose acts of them may be liable, the indemnification obligation under the preceding paragraph shall not be limited in any way by any limitation on the amount or type of damages, compensation or benefits payable by or for CONTRACTOR or any such subcontractors or other person or organization under worker's or workmen's compensation acts, disability benefit acts or other employee benefit acts.

The obligations of the CONTRACTOR under this article shall not extend to the liability of ENGINEER, ENGINEER's consultants, agents or employees arising out of the preparation or approval of drawings, opinions, reports, surveys, change orders, designs or specifications.

47. CONTROLLING LAW

In the case of a legal dispute between the OWNER and the CONTRACTOR the law of the state of Michigan shall govern. The venue for resolving any legal dispute between the two parties will be within the County of the OWNER's legal address.

48. NO WAIVER OF CONTRACT

Neither acceptance of the whole or any part of the Work by the OWNER or his ENGINEER, or any of its agents, nor any order, measurements or certificate by the ENGINEER, nor any order by OWNER for payment of money, nor any payment for the whole or any part of the Work by OWNER, nor any extension of time, nor any possession taken by the OWNER or its agents, shall operate as a waiver for any portion of the Contract Documents or any power therein provided; nor shall any waiver of any breach of contract be held to be a waiver of any other or subsequent breach.

49. DISPUTE RESOLUTION

Dispute resolution methods and procedures, if any, shall be as set forth in the Supplemental Specifications. If no method and procedure has been set forth, OWNER and CONTRACTOR may exercise such rights or remedies as either may otherwise have under the Contract Documents or by Laws or Regulations in respect of any dispute.

50. GIVING NOTICE

Whenever any provision of the Contract Documents requires the giving of written notice, it will be deemed to have been validly given if delivered in person to the individual or to a member of the firm or to an officer of the corporation for whom it is intended, or if delivered at or sent by registered or certified mail, postage prepaid, to the last business address known to the giver of the notice.

51. CUMULATIVE REMEDIES

The duties and obligations imposed by these General Conditions and the rights and remedies available hereunder to the parties hereto are in addition to, and are not to be construed in any way as a limitation of, any rights and remedies available to any or all of them which are otherwise imposed or available by Laws or Regulations, by special warranty or guarantee, or by other provision of the Contract Documents, and the provisions of this paragraph will be as effective as if repeated specifically in the contract Documents in connection with each particular duty, obligation, right, and remedy to which they apply.

End of Section

GENERAL SPECIFICATIONS

Table of Contents

1. Existing Underground Structures & Utilities....1
2. Soil Conditions....1
3. Soil Erosion and Sedimentation Control....1
4. Preservation, Protection & Use of Survey Controls, Monument Points & Grade Stakes....2
5. Protection of Public and Private Utilities....2
6. Miscellaneous Damages....3
7. Sump Pump Discharge Pipe & Local Services....3
8. Existing Sewer Facilities....3
9. Existing Water Facilities....3
10. Existing Gas Facilities....3
11. Existing Electric, Cable, and Telecommunications....3
12. Preservation of Trees & Shrubbery....4
13. Trimming Trees & Shrubs....4
14. Maintenance of Service....4
15. Cleanliness of the Work Site and Streets....4
16. Dust Control....5
17. Working Space & Use of Streets or Private Property....5
18. Easements....5
19. Power & Light....5
20. Water....5
21. Weather Protection & Heating....6
22. Railroad Crossing....6
23. Ownership of Salvaged Materials....6

1. EXISTING UNDERGROUND STRUCTURES & UTILITIES

The location of public or private utilities shown on the plans is in accordance with the best information available. No guarantee is given that the locations are absolutely accurate or that utilities other than those shown are not present.

For protection of underground utilities, the CONTRACTOR shall contact "MISS DIG" at 1-800-482-7171 a minimum of three (3) working days prior to excavating. This does not relieve the CONTRACTOR of the responsibility of notifying utility OWNERs who may not be part of the "MISS DIG" alert system.

2. SOIL CONDITIONS

If soil borings have been taken for this project, then they are included in an appendix.

Where the OWNER has caused soil borings to be made to aid the ENGINEER in design of the work, these boring logs are provided herein for the prospective bidder to examine. This information is given to bidders as an aid in determining the character of the soil and groundwater conditions. The OWNER does not guarantee that the ground encountered during construction will conform to the borings. Bidders should secure such other information as they consider necessary to check and supplement the above data.

The CONTRACTOR shall complete the work in whatever materials, and under whatever conditions he may encounter or create.

3. SOIL EROSION AND SEDIMENTATION CONTROL

The CONTRACTOR shall comply with the requirements of the Soil Erosion and Sedimentation Control Act of the State of Michigan, Part 91 of ACT 451 of PA of 1994 and with all the requirements, rules and standards of the official enforcing agent for the project location.

If a soil erosion control permit is required on this project, the CONTRACTOR shall adhere to the specific conditions of the project permit. Where the permit is issued in the name of the CONTRACTOR and requires that a bond be posted, the

CONTRACTOR shall include in his bid the permit fee and bond expense.

The ENGINEER shall have full authority to require compliance with the soil erosion control requirements and may order suspension of the work if measures are not adequate or a problem develops requiring additional soil erosion control measures. Any ordered suspension of the work shall not be grounds for CONTRACTOR's claims for "down time" or "lost time".

4. PRESERVATION, PROTECTION & USE OF SURVEY CONTROLS, MONUMENT POINTS & GRADE STAKES

During the progress of the work, the CONTRACTOR may encounter section line, fractional section line, and property controlling corner monuments. Insofar as is known, such public land survey corners and property monuments have been indicated on the plans.

The CONTRACTOR shall be responsible for complying with the requirements of Michigan Public Act 34. Specifically, he shall be responsible for notifying the county surveyor before removing a public land survey corner monument for construction activities. In addition, if construction time constraints will result in the public land survey corner monument being removed for more than one year, then the CONTRACTOR shall arrange to have a temporary corner monument set until the permanent one can be re-established. The costs of removing and replacing public land survey corner monuments as well as setting temporary corner monuments shall be the responsibility of the CONTRACTOR unless pay items are provided in the bid form for these tasks. The CONTRACTOR shall not remove any such monument until the ENGINEER has witness points as reference for resetting of such monuments. After referencing has been done and suitable permanent sketches prepared, the ENGINEER will give permission to the CONTRACTOR for removal of the monument. Monuments and monument boxes shall be reset only after all backfilling has fully settled.

The CONTRACTOR shall protect and preserve all monument points, property corners, grade stakes, line and reference points. Where stakes and markers are disturbed or removed due to operations under this Contract, the CONTRACTOR shall be charged at invoice cost by the ENGINEER for replacing the points. Care shall be exercised by the CONTRACTOR when operating near the markers, as any carelessness in operations will also cause a time delay to the schedule due to additional stakeout time required to replace reference points, lines, etc.

The CONTRACTOR shall accurately locate the work from reference points established by the ENGINEER along the surface of the ground and line of work.

5. PROTECTION OF PUBLIC & PRIVATE UTILITIES

Where any utility, water, sewer, gas, telephone or any other public or private utilities are encountered, the CONTRACTOR must provide adequate protection for them, and he will be held responsible for any damages to such utilities arising from his operations.

When it is apparent that construction operations may endanger the foundation of any utility, conduit, or support of any structure, the CONTRACTOR shall notify the utility OWNER of this possibility, and he shall take such steps as may be required to provide temporary bracing or support of conduits or structures.

In all cases where permits or inspection fees are required by utilities in connection with changes to or temporary support of their conduits, the CONTRACTOR shall secure permits and pay all inspection fees.

When it is necessary in order to carry out the work that a pole, telephone or electric, be moved to a new location or moved and replaced after construction, the CONTRACTOR shall arrange for moving such pole or poles and the lines thereof, and shall pay any charges.

Where it is the policy of any utility owner to make his own repairs to damaged conduit or other structures, the CONTRACTOR shall cooperate to the fullest extent with the utility OWNER and shall see that his operations interfere as little as possible with the utility OWNER's operations.

6. MISCELLANEOUS DAMAGES

The CONTRACTOR shall be responsible for repairing all damages to existing lawns, sidewalk, parking lots, streets or other areas outside the limits of the Contract. Private utilities, private ornamental gas or electric lights, sprinkler systems, fences, shrubs, trees, existing sidewalk, or any other surface or subsurface items of value damaged by the CONTRACTOR shall be repaired, replaced or removed and replaced to at least equal condition at the CONTRACTOR's expense unless otherwise specified on the plans.

7. SUMP PUMP DISCHARGE PIPE & LOCAL SERVICES

Any discharge pipe from sump pumps or yard drains encountered on this project, whether or not shown on the plans, which discharges to existing ditches and/or storm sewers or cross public or private easements, shall be maintained, replaced, or reconnected as necessary. Bulkheads shall be placed only as approved by the Engineer. Sump pump connections shall be made to the storm drain pipe by a coring method as approved by the ENGINEER. The CONTRACTOR shall use adequate measures to prevent soil erosion, sedimentation, and/or ponding when connecting discharge pipes to existing or proposed ditches. This work shall be considered as incidental to the cost of the project.

8. EXISTING SEWER FACILITIES

Existing sewers or drains may be encountered along the line of work. In all such cases, the CONTRACTOR shall perform his operation in such a manner that sewer service will not be interrupted. He shall, at his own expense, make all temporary provisions to maintain sewer service.

Unless otherwise indicated on the plans, the CONTRACTOR shall replace, at his own expense, any disturbed sewer or drain, or relay same at a new grade to be established by the ENGINEER such that sufficient clearance for the sewer will be provided.

9. EXISTING WATER FACILITIES

Where existing water mains and/or water services are encountered in the work, they shall be maintained in operation. They shall be relayed if necessary using the class of pipe and fittings standard to the OWNER of the main.

10. EXISTING GAS FACILITIES

Where existing gas mains are encountered, the CONTRACTOR shall immediately notify the ENGINEER and the gas company. The CONTRACTOR shall then arrange with the gas company for any necessary relocation. The CONTRACTOR will receive no extra compensation on account of delays incurred in conjunction with such relocations.

11. EXISTING ELECTRIC, CABLE, AND TELECOMMUNICATIONS

Where existing electric, cable, or telecommunications facilities are encountered, the CONTRACTOR shall immediately notify the ENGINEER and the affected utility company(ies). The CONTRACTOR shall then arrange with the

utility company for any necessary relocation. The CONTRACTOR will receive no extra compensation on account of delays incurred in conjunction with such relocations.

12. PRESERVATION OF TREES & SHRUBBERY

No trees or shrubbery of any kind shall be removed or destroyed by the CONTRACTOR without written permission of the ENGINEER. The CONTRACTOR will be held fully responsible for any damages caused by his work to adjoining trees and shrubs. Ample precautions shall be taken by the CONTRACTOR to protect such trees and shrubs that are to remain in place by surrounding them with fences or other protection before construction begins. Shrubbery that must be removed shall be preserved and replaced in a manner acceptable to the OWNER.

The CONTRACTOR shall protect and/or replace all shrubbery damaged or destroyed by operations under this Contract. The CONTRACTOR shall receive no extra compensation for preservation of trees and shrubbery.

13. TRIMMING TREES & SHRUBS

Where necessary in the field, the CONTRACTOR shall trim trees and shrubs by a method approved by the ENGINEER. All cut surfaces over one inch in diameter shall be painted with grafting wax. All branches which have been damaged by construction shall be pruned correctly to branch collars, to help promote the health of the tree. Also, any abrasions or gouges afflicted on the tree trunks during construction should be bark traced and lightly coated with tree paint. This work shall be incidental to the project.

14. MAINTENANCE OF SERVICE

Drainage through existing sewers, ditches and drains shall be maintained at all times during construction, and all nearby gutters shall be kept open for drainage. Where existing sewers are encountered in the line of work that interfere with construction, the flow in the sewers, including both dry weather flow and storm flow, shall be maintained.

During the progress of the work, the CONTRACTOR shall accommodate both vehicular and foot traffic and shall provide free access to fire hydrants, water and gas valves. Except as otherwise specified herein or as noted on the plans, street intersections may be blocked but one-half at a time, and Contractor shall lay and maintain temporary driveways, bridges and crossings such as are necessary, in the opinion of the ENGINEER, to reasonably accommodate the public.

In the event detours, traffic control devices or safety equipment are needed, they shall be placed and maintained in accordance with the Michigan Manual of Uniform Traffic Control Devices (MMUTCD).

Maintenance of service as described above shall be considered as incidental to the project cost unless pay items have been included in the proposal for this work.

15. CLEANLINESS OF THE WORK SITE & STREETS

The CONTRACTOR shall keep the work site and all property occupied by him in a neat and orderly condition at all times. Waste material, rubbish and debris shall not be allowed to accumulate. The CONTRACTOR's equipment, temporary buildings and excess materials shall be promptly removed from the work site when no longer needed. At completion of the work, the premises shall be left clean.

The CONTRACTOR shall keep the streets clean. Trucks hauling excavated material, cement, sand, stone or other loose materials from or to the site shall be tight so that no spillage will occur on adjacent streets. Before trucks start away from the site, their

loads shall be trimmed and covered. If, in the judgment of the OWNER, adequate cleanup efforts are not being expended, including but not limited to, roadway, driveway and drainage maintenance, and removal of surplus materials, further construction shall be halted and work forces directed to the cleanup activity until proper order is restored. Should the CONTRACTOR continue to be negligent of his duties in maintaining proper street cleanliness, the OWNER will take necessary steps to perform such cleaning and shall charge the CONTRACTOR for all the costs.

16. DUST CONTROL

All haul roads, detour roads, temporary access roads, other public or private roads, driveways and parking lots used by the CONTRACTOR must be maintained in a dust free condition for the duration of the Contract. The control of the dust shall be accomplished by application of dust control materials and methods of application as approved and as directed by the ENGINEER. Such dust control materials shall be applied as often as is necessary to control dust. Neglect of dust control will not be tolerated.

Should the CONTRACTOR be negligent of his duties in providing dust control, the OWNER may, with or without notice cause the same to be done and deduct the cost of such work from any monies due or to become due the CONTRACTOR under the Contract. Cost of providing dust control shall be considered incidental to the project.

17. WORKING SPACE & USE OF STREETS OR PRIVATE PROPERTY

The CONTRACTOR's operations in public streets or alleys shall be confined to as small a space as practicable, so as not to cause undue inconvenience to the public or abutting properties, and shall be subject to the approval of the ENGINEER.

Where the CONTRACTOR wishes to work on or stockpile materials on nearby properties, it will be his responsibility to contact the property owner for permission. Upon request, the CONTRACTOR shall provide a copy of written permission from any affected property owner. The OWNER will not become involved with any such agreements and will not be held responsible for any damages that the CONTRACTOR may cause to private property. The CONTRACTOR shall not be compensated for restoration of private properties and stockpile areas unless said areas were within the original project limits.

18. EASEMENTS

Prior to the start of construction, the CONTRACTOR shall verify with the OWNER that any required easements have been obtained.

The CONTRACTOR shall keep his work operations within these easements and shall be responsible for complying with any easement conditions that are shown on the plans or stated in the Contract documents.

19. POWER & LIGHT

The CONTRACTOR shall furnish, at his own expense, all the electric power and lighting necessary during the life of this Contract or until such time as the OWNER takes over the work. The CONTRACTOR shall be responsible for complying with any applicable ordinances or regulations concerning power and light.

20. WATER

Unless otherwise allowed by the OWNER, the CONTRACTOR shall furnish, at his own expense, all the water necessary during the life of this Contract or until such time as the OWNER takes over the work.

The CONTRACTOR shall not make a connection to any public water main or fire

hydrant without first obtaining the necessary permit and/or meter from the OWNER.

Existing public water systems shall be operated and controlled by the OWNER. All valves shall be operated exclusively by the OWNER's personnel.

The CONTRACTOR shall not make any connection to or obtain water from a private water source without obtaining written permission from the owner of the water source. The CONTRACTOR shall provide a copy of the written permission to the OWNER upon request.

21. WEATHER PROTECTION & HEATING

The CONTRACTOR shall provide and maintain weather protection and heating at his own expense to properly protect the work under construction from damage if weather conditions require. This work shall include all windbreaks, insulating cover, and other necessary measures required to provide protection from freezing.

The CONTRACTOR shall continue to provide weather protection and heating as necessary until such time as the OWNER takes over the work.

22. RAILROAD CROSSING

Where the work crosses a railroad right-of way, the CONTRACTOR shall secure Railroad Company approval of his methods and schedule of operation. The CONTRACTOR shall carry out his work in strict accordance with the standards of the Railroad Company. The CONTRACTOR shall pay any inspection, signal or flagman costs.

23. OWNERSHIP OF SALVAGED MATERIALS

All salvageable materials such as castings, hydrants, valves, culverts and similar items removed during construction shall remain the property of the OWNER. The CONTRACTOR shall deliver these salvaged materials to the OWNER's public works facility. If the OWNER indicates that he does not want the salvaged items, then the CONTRACTOR shall be responsible for disposal of the items.

End of Section

EARTHWORK

Table of Contents

General

1. Scope of Work....1
2. MDOT....1

Materials

3. Bedding....1
4. Backfill....2
5. Stone Refill....2
6. Embankment....2

Construction

7. Clearing....2
8. Tree Removal....2
9. Stump Removal....2
10. Pavement Cuts....2
11. Classification of Excavation....3
12. Roadway Earthwork....3
13. Methods of Excavation in Earth....3
14. Trench Excavation....3
15. Transport of Native Materials Offsite....4
16. Stone Refill for Trench Undercut....4
17. Excavation & Trench Dewatering....4
18. Diverting Existing Sewers....5
19. Sheeting, Bracing & Shoring....5
20. Sheeting Left in Place....5
21. Crossing Existing Structures/Pipes....6
22. Tunneling Trees....6
23. Backfilling....6
24. Placing and Compacting Embankment....8
25. Disposal of Excavated Material....8
26. Final Cleanup & Grading....8
27. Contractor Safety Requirements....9

GENERAL

1. SCOPE OF WORK

This work shall be subject to the General Conditions and the General Specifications. The work shall include furnishing of labor, materials, tools, equipment, accessories and services necessary for completing the excavation and backfilling for the items as shown on the contract drawings and/or as herein required. This also includes trenching, trench or subgrade undercutting, roadway earthwork, complete and continual drainage of excavation, sheeting, bracing and shoring of sides of the excavation, backfilling around structures and over pipelines, and the disposal of excess excavated material.

2. MDOT

References to Michigan Department of Transportation (MDOT) Specifications shall pertain to the 2020 Standard Specifications for Construction.

MATERIALS

3. BEDDING

A. Sand shall be a sharp, clean sand free of lumps of clay or debris with 100 percent passing a 3/8-inch sieve and less than 10 percent loss by wash.

B. Granular material shall meet the requirements of Section 902.07 of the MDOT Standard Specifications for Construction for Granular Material Class II and Class III.

C. Pea gravel shall be unwashed and shall be from ¼-inch to 5/8-inch in size.

D. Bedding material shall be provided from offsite unless the trench passes through a well-defined strata of sand or gravel. Bedding material shall be subject to the approval of the ENGINEER.

E. Stone material shall meet the requirements of Section 902.03 of the MDOT Standard Specifications for

Construction for 6A crushed Coarse Aggregate or approved equal.

4. BACKFILL

A. Job Excavated Backfill

Job excavated backfill shall be defined as material excavated from the site that is free from frozen earth, boulders, rocks, stones larger than 3-inch in size, debris, blue and gray clay, and organic material.

B. Granular Backfill

Granular backfill shall be defined as sharp sand, gravel, or crushed stone that is free from lumps of clay and soft or flaky material and shall conform to the latest MDOT Specification for Granular Material Class II or III. Granular backfill shall be used for fill work located under or within the influence of roadway surfaces. The Owner's standard details shall dictate which type of granular material (class II or III) is required for the project.

Material excavated from the trench may be used as granular backfill when, in the opinion of the ENGINEER, it meets the granular backfill grading requirements.

5. STONE REFILL

Stone refill shall consist of natural gravel, slag, or crushed gravel that is equivalent in gradation to MDOT 6A unless otherwise called for in the plan details.

6. EMBANKMENT

Embankment material shall consist of sound earth as described in Section 205.03H of the MDOT Standard Specifications for Construction.

CONSTRUCTION

7. CLEARING

Prior to the start of construction, the CONTRACTOR shall verify the limits of trees and other items that are to be saved. The CONTRACTOR shall then clear the site or trench excavation area of all remaining trees, brush, and other miscellaneous items that are not to be saved.

8. TREE REMOVAL

Where called for on the plans, the CONTRACTOR shall remove trees, including stump and main roots, and dispose of all associated foliage and debris offsite. Trees less than six (6) inch diameter shall be removed where required by the Work as incidental to the Contract. The CONTRACTOR shall abide by any easement agreements regarding the tree removal work and wood ownership.

9. STUMP REMOVAL

Where called for on the plans, the CONTRACTOR shall remove existing stumps, including main roots (two (2) inch diameter and larger), dispose of all associated debris offsite, and backfill the void with suitable material.

10. PAVEMENT CUTS

Where a trench must be cut through pavement, driveway, or sidewalk, particular care shall be taken to avoid unnecessary damage to adjoining areas of the pavement, driveway or sidewalk. All cuts through existing surfaces shall be made full-depth with a concrete saw. Cuts in concrete pavement shall be made parallel with longitudinal and transverse construction or contraction joints.

Saw cuts in concrete pavement shall not be nearer than five feet (5'-0") to a transverse joint, to the centerline of pavement, or to the edge of pavement or curb, i.e., no existing or replacement pavement shall be less than five feet (5'-0") in width. If the damaged pavement or surfacing is nearer than five feet (5'-0") to a joint or centerline of

pavement, or to edge of pavement, surfacing or curb, removal and replacement shall be extended to said joint, centerline, edge of pavement, surfacing, or curb. These same requirements shall apply to the saw cutting and replacement of concrete driveways.

If a square or block of sidewalk is cut, broken, or cracked, the entire square or block shall be removed and replaced.

11. CLASSIFICATION OF EXCAVATION

Earth, as a name for excavated material, shall include all glacial deposits whether cemented or not, except solid boulders one-half cubic yard or more in volume. It shall also include all alluvial deposits and material of every kind that can be excavated with equal facility by the equipment and means typically used for earth excavation.

Peat, as a name for excavated material, shall include all unstable organic soils such as peat, muck, marl, and underlying very soft clay.

Rock, as a name for excavated material, shall include pre-glacial solid ledge rock that can be removed most practically by blasting, barring or wedging, or by some other standard method of quarrying solid rock. It shall also include solid boulders of one-half cubic yard or more in volume as well as existing concrete, masonry with mortar joints, or other existing structural work that can be excavated practically only by methods of quarrying solid rock. It shall not include fragile, friable, or disintegrated materials of any kind that can be excavated by equipment and means used for earth excavation.

12. ROADWAY EARTHWORK

Roadway earthwork shall be performed in accordance with the construction methods that are described in Section 205 of the MDOT Standard Specifications for Construction unless otherwise called for in the plan notes, details, or supplemental specifications.

13. METHODS OF EXCAVATION IN EARTH

All excavation shall be by open cut from the surface, except in special cases where boring/jacking under pavement or structures may be required, or where boring/jacking under the root system will be required for tree root protection. All excavation shall be made in such a manner and to such depth, length, and width as will give ample room for building the structures, bracing, sheeting and supporting the sides of the excavation, pumping and drainage of ground water and sewage which may be encountered, and removal of all materials excavated. Special care shall be taken so that the soil below the bottom of structures to be built shall be left undisturbed so that a firm bed will be provided for construction. Any voids shall be backfilled with suitable granular material and shall be properly compacted.

14. TRENCH EXCAVATION

A. General

Excavation shall be of sufficient width and depth to provide adequate room for construction and installation of the work to the lines, grades and dimensions called for on the plans. Unless otherwise called for on the OWNER's standard details, the width of a trench from the invert to a height twelve (12) inches above the top of the pipe barrel shall be indicated as follows:

Pipe Size	Maximum Trench Width
4" through 12"	30"
Larger than 12"	O.D. + 24"

If the maximum trench width as specified above is exceeded, unless otherwise shown on the drawings, the CONTRACTOR shall install, at his own expense, such concrete

cradling or other bedding as is approved by the ENGINEER, to support the added load of the backfill.

Where trench excavation is in granular material, the last six (6) inches of trench depth shall be carefully excavated and trimmed by hand to the exact elevation and contour of pipe. Where trench excavation is in rock or clay soil, the trench bottom shall be undercut a minimum of four (4) inches below the final elevation of pipe. The bedding material as hereinafter specified shall be placed and compacted to the underside of the pipe.

Excavation for structures shall be made to the outside lines and surfaces of such structures wherever it is practicable to build directly against the sides and bottoms of excavations. In such cases, care shall be taken not to disturb the original foundation or backing. Final trimming shall be done by hand just before construction of the structure. If excess excavation is made, or the material becomes disturbed so as to require removal beyond the prescribed limits, the resulting space shall be refilled with bedding, as specified hereinafter, and solidly machine tamped into place to 95 percent of maximum unit weight before the construction work proceeds.

Excavation for structures shall be extended sufficiently beyond the limits of the structure to provide ample room for form construction and other construction methods to be followed, wherever necessary.

B. Bedding

Where the subgrade below the bottom of the pipe is disturbed during the construction, the space shall be refilled with sand or pea gravel bedding material solidly tamped to form a firm foundation for the pipe. Sand or pea gravel bedding material shall be extended to one (1) foot above the pipe, except that the bedding shall be exclusively pea gravel to the springline for pipe 36-inch and greater in diameter.

C. Amount of Trench Opening

Not more than 50 feet of trench shall be open at one time in advance of the pipe unless permitted by the ENGINEER. The length of street that may be occupied by the construction work at any one time shall be subject to the direction of the ENGINEER and will be based on requirements of the use of the street by the public. No more than 600 consecutive feet of street length shall be occupied at one time, and vehicle traffic through the street shall not be entirely stopped without permission of the ENGINEER.

After placement of the utility line, the Contractor shall backfill the trench promptly in order to minimize the length of open trench and avoid any unsafe conditions.

15. TRANSPORT OF NATIVE MATERIALS OFFSITE

If the Contractor encounters good materials (sand, gravel, topsoil, etc.) during the course of construction, he shall not be allowed to transport these materials offsite without the written approval of the Engineer. Wherever possible, suitable native sands and gravels shall be used as backfill rather than transporting them offsite and replacing them with non-native materials of a lesser quality.

16. STONE REFILL FOR TRENCH UNDERCUT

In locations where soil at the bottom of trench is unstable, the CONTRACTOR shall excavate (undercut) below the trench bottom and place stone refill as called for in the Materials Section of this specification.

17. EXCAVATION & TRENCH DEWATERING

The CONTRACTOR shall maintain any excavation or trench free of water during construction of any structures and/or pipelines. Water accumulated due to rainfall or runoff and minor groundwater inflow that

can be controlled through the use of portable trash, submersible or positive displacement pumps shall be considered normally expected and anticipated conditions associated with underground construction. This effort will be considered incidental to the cost of construction and will not be reimbursable at the unit price bid for dewatering in the proposal.

The required use of deep wells and/or well points to lower and maintain a reduction in the groundwater elevation below the trench bottom shall be subject to approval of the ENGINEER and shall constitute a reimbursable expense for trench or excavation dewatering. If a pay item for dewatering is included in the Bid Form, then the CONTRACTOR would receive payment for this work based upon the unit bid price. If there are no provisions in the contract for payment for dewatering (i.e. bid item or incidental to other pay items), then the CONTRACTOR shall submit a detailed estimate of the additional cost. Upon acceptance of the CONTRACTOR's estimate, the ENGINEER shall issue a change order. The CONTRACTOR must demonstrate that a continuous effort is required to control hydrostatic pressure in the construction area in order to claim compensation for dewatering.

The CONTRACTOR shall take adequate precautions to control the discharge of dewatering pumps so as to prevent soil erosion or sedimentation of drainage ditches, structures, storm sewers, culverts, natural drainage courses, ponds, lakes or wetlands.

The CONTRACTOR shall insure that discharge from any dewatering operations has a suitable outlet and that it will not cause any damage to adjacent dwellings or property. Water and discharge hoses shall be placed and/or controlled so as to prevent a hazard to pedestrians or motor vehicles passing in the vicinity of the construction site.

Electric pumps shall have suitable power supply appurtenances meeting NEC requirements and properly fused and grounded to prevent electrical shock hazards to on-site personnel.

Internal combustion engine driven pumps, if operated 24 hours per day, shall have adequate exhaust silencers in good repair to muffle engine noise to an acceptable level for the area where located.

18. DIVERTING EXISTING SEWERS

Where existing sewers or drains are encountered in the Work, adequate provision shall be made for diverting flow in the existing sewers so that the excavation will be kept dry during the progress of the construction work. Upon completion of the construction work, the existing sewers shall be restored or otherwise provided with an adequate outlet as directed by the ENGINEER.

19. SHEETING, BRACING & SHORING

Where required to properly support the surfaces of excavations to protect the construction work, adjacent work or workers, sheeting, bracing and shoring shall be provided. If the ENGINEER is of the opinion that at any point sufficient or proper supports have not been provided, he may order such additional supports at the expense of the CONTRACTOR, but neither the placing of such additional supports by the order of the ENGINEER nor failure of the ENGINEER to order such additional supports placed shall release the CONTRACTOR from his responsibility for the sufficiency of such supports and the integrity of the Work. In removing the sheeting and bracing after the construction has been completed, special care shall be taken to prevent any caving of the sides of the excavation and injury to the completed work or to the adjacent property.

20. SHEETING LEFT IN PLACE

Sheeting, bracing and shoring shall not be left in place after completion of the work except as required by the ENGINEER. Where sheeting, bracing, and shoring must be left in place in order to protect the work, adjacent structures, or property, it shall be cut off or left not less than two (2) feet below the established surface grade. If sheeting, shoring or bracing must be left in place, then it shall be paid for at the contract unit bid price that is shown on the Bid Form. If a pay item was not included on the Bid Form, then a work order shall be negotiated.

21. CROSSING EXISTING STRUCTURES/PIPES

During construction, it may be necessary to cross under certain sewers, drains, culverts, water lines, gas lines, electric conduits and other underground structures. Every effort shall be made to prevent damage to such structures. Wherever such structures are disturbed or broken, they shall be restored to good condition. Specified granular backfill shall be placed as described in Section 23, Backfilling. MDOT Grade S3 concrete shall be utilized where directed by the ENGINEER at no additional cost to the project. Either granular backfill or concrete shall be brought to the spring line of the higher utility.

22. TUNNELING TREES

Trees eight (8) inches in diameter or less will require a minimum tunnel length of eight (8) feet. Trees over eight (8) inches in diameter, measured four (4) feet above the ground surface, will require a minimum tunnel length equal to one foot for each inch of tree diameter.

Trees shall be tunneled whenever any portion of an excavation approaches within a distance equal to one-half the required tunnel length except as otherwise noted on the plans.

Tunneling under trees may be accomplished by one of the following methods:

a. Boring and jacking casing pipe along with placement of a carrier pipe.

b. Boring and jacking sewer pipe or water main without a casing pipe.

c. Jacking sewer pipe or water main without boring and without a casing pipe.

Plan notes or existing field conditions shall indicate which method may be used for the tree tunneling work.

23. BACKFILLING

A. General

Backfilling shall include all work required as hereinafter specified. The placement of various pipe, including bedding and building of structures, shall be completed prior to backfilling.

Where called for on the plans, the CONTRACTOR shall backfill trenches and/or other excavations with suitable excavated material (not including gray or blue clay) replaced into the trench or excavation and compacted to not less than 95 percent of maximum unit weight as determined at existing moisture content during backfilling. Compaction shall be provided by means of suitable mechanical compaction equipment.

If the moisture content of cohesive backfill material exceeds the optimum moisture content for maximum density by more than three percent (3%), the CONTRACTOR shall dry the material to meet the foregoing moisture content limitation or provide, at his own expense, MDOT Granular Material Class III. No sloppy or wet backfill will be allowed.

Maximum unit weight will be determined by current methods of Test for Compaction and Density of Soil, AASHTO Designation T-180 or by the Cone Density Method

developed by MDOT, as the material may require.

The ENGINEER shall make compaction tests at all locations requiring granular backfill.

Any depression resulting from settlement of any backfill prior to the date of final payment for all work under this contract shall be brought to the proper grade and surface and made to match the adjacent surface.

B. Materials

Bedding, excavated backfill, and granular backfill shall conform to the requirements that were previously described in Parts 3 and 4 of this specification.

C. Compaction

Backfill material shall be placed in layers not to exceed 12 inches in thickness unless the contractor can demonstrate to the satisfaction of the Engineer that he can consistently attain the specified density on thicker lifts.

Specified compaction shall be obtained with the use of a bulldozer, sheepsfoot roller, mechanical tamper or other similar and effective equipment. Specified compaction means not less than 95 percent (not average 95 percent) of maximum unit weight when tested in accordance with current MDOT Specifications.

If excavated material is not suitable to obtain 95 percent minimum compaction, the CONTRACTOR shall, at his expense, remove unsuitable materials or add granular materials, or both, to obtain ninety-five percent (95%) minimum compaction as specified.

Compaction tests will be made by a representative of the OWNER and paid for by the OWNER, unless otherwise specified in the Contract Documents.

D. Backfilling Trenches

Bedding

The type of bedding required is shown on the detail drawings.

Bedding shall be worked under the haunches of the pipe to provide firm continuous support.

Bedding placed on the sides of and above the pipe shall be compacted by machine tamping to not less than ninety-five percent (95%) of maximum unit weight in layers not exceeding 12 inches in depth.

Trench or Excavated Area

All trenches in paved streets, shoulders, traveled roadways, parking areas and driveways shall be backfilled with suitable excavated backfill or granular backfill, as shown on the drawings from one (1) foot above top of pipe up to the required subgrade elevation which will allow for placement of the required gravel base and/or pavement surface. The approved excavated backfill or granular backfill shall be placed and thoroughly and uniformly compacted by machine tamping to the specified compaction. With the approval of the ENGINEER, water jetting may be accepted in lieu of tamping for granular backfill only.

Specified compaction shall be required of the entire trench when the edge of trench is within three (3) feet of edge of pavement. On road crossings, specified compaction shall extend ten (10) feet beyond the edge of pavement for paved roadways with gravel shoulders or shall extend three (3) feet beyond the back of curb for roadways with curb.

Trenches under concrete sidewalks and bike paths shall be backfilled from one foot above top of pipe to a level four (4) inches below finished grade of the sidewalk with approved suitable excavated backfill or

granular backfill and compacted to ninety-five percent (95%) maximum density.

Trenches not in paved streets, shoulders, traveled roadways, parking areas, driveways or under sidewalks, shall be backfilled from one (1) foot above the top of the pipe up to the ground surface (except as noted under the Restoration Specification) with suitable excavated backfill and shall require compaction equal to adjacent undisturbed earth.

Wherever gas mains, water mains, sewers, or other utilities are located in the trench area, granular backfill shall be used for backfill from bottom of the trench up to the springline of the pipes. Granular backfill shall be placed across the full trench width and extend far enough either side of the existing pipe to allow specified compaction so as to thoroughly support the pipe within the trench area.

E. Backfilling Around Structures

As soon as practicable after concrete structures have set, forms and debris shall be removed and the surface of the concrete pointed. After the structure has been checked and approved, the excavated area around the structure shall be backfilled up to specified subgrade with granular material or suitable excavated material as called for on the drawings for the adjacent trench. The fill shall be thoroughly compacted by machine tamping. No large boulders or masonry shall be placed in backfill. No backfill will be placed against manhole walls within 48 hours after the plaster coat has been applied to the outside of the walls nor shall backfill be placed about concrete structures until concrete has attained at least 75 percent of its design strength and approval of the ENGINEER has been obtained.

24. PLACING AND COMPACTING EMBANKMENT

Embankment material for fill work shall be placed and compacted in accordance with Section 2.05.03H of the MDOT Standard Specification for Construction.

25. DISPOSAL OF EXCAVATED MATERIAL

After all suitable excavated material has been used on site, the CONTRACTOR shall be responsible for properly removing and disposing of the excess.

The CONTRACTOR shall also be responsible for disposing of all other excavated materials that are unsuitable for use as fill or backfill. Unsuitable materials may include, but are not limited to, broken concrete, asphalt, rock, stone, and other related debris. The CONTRACTOR shall be required to obtain his own disposal areas and permits and shall receive no additional compensation for this disposal work.

Surplus or unsuitable material shall not be disposed of either temporarily or permanently beyond the plan grading limit line or across any wetland or flood plain unless the plans provide for such placement.

Any agreements that the CONTRACTOR makes with local residents concerning the placement of fill on private property shall be the sole responsibility of the CONTRACTOR. The OWNER will not become involved with any such agreements and will not be liable for damages that the CONTRACTOR may cause to private property.

Placement of fill on private property may require that the resident or CONTRACTOR obtain a grading permit or fill permit from the OWNER.

26. FINAL CLEANUP & GRADING

Upon completion of the construction, and before final payment is made, the CONTRACTOR shall restore his working area to as clean a condition as existed before his operations were started. He shall go over the entire line and refill any place that may

have settled. He shall then re-grade and put in shape all backfilled trenches, all fills he may have made from excess excavated materials, and all other areas that may have been disturbed through all operations.

27. CONTRACTOR SAFETY REQUIREMENTS

The excavation and trenching operations shall be conducted by the CONTRACTOR in a manner that will provide safe working conditions for all persons on the site who may be affected by the Work. The CONTRACTOR shall also conduct his operations in a manner that will protect adjacent property from damage.

Trench sides shall be either cut back to the slope as necessitated by soil and ground water conditions which will provide stable sides, or supporting systems shall be installed that are capable of restraining the earth sides from movement. A qualified employee of the CONTRACTOR shall design the trench supporting systems.

The CONTRACTOR shall employ, at all times at the site of the work, a qualified person who will be responsible for the safety of both the work and workmen, and who will make all the decisions relevant to the stability of trenches, the adequacy of any and all protective devices, proper operation of equipment, and all other matters related to safety.

The CONTRACTOR shall not store, along and adjacent to the trench, excavated material, heavy equipment, backfill materials, sewer pipe, or other construction materials which may impose too great a load on the earth and cause displacement or caving of the earth. The CONTRACTOR shall, at all times, provide a safe means of emergency exit from all trench excavations.

End of Section

DIGITAL RECORDED VIDEO SURVEY

Table of Contents

General

1. Scope 1
2. Firm Background 1
3. Schedule 1

Materials

4. Equipment 1
5. Digital Recording 2
6. Digital Video Tracks 2
7. Lighting Requirements 3
8. Digital Video Coverage 3
9. Firm Responsibilities 3
10. Video Indentification and Submittal 4

GENERAL

1. SCOPE

Prior to commencing work, the CONTRACTOR shall have a continuous color audio-video digital recording taken along the designated length of the project to serve as a record of existing conditions. All written records and flash drives containing digital records shall become the property of the OWNER.

2. FIRM BACKGROUND

The CONTRACTOR shall engage the services of a professional digital recording firm that is actively engaged in color audio-video recordings for various municipalities. The firm shall have a minimum of two years experience in audio-video digital recording of construction projects.

The OWNER may make such investigation as he deems necessary to determine the ability of the digital recording firm to perform the work. The CONTRACTOR shall furnish the OWNER all such information and data for this purpose as the OWNER may request. The OWNER reserves the right to reject any digital recording firm if the investigation fails to satisfy the OWNER that such firm is properly qualified to carry out the work specified herein. Upon rejection of a digital recording firm, the CONTRACTOR shall engage the services of another firm that shall undergo the review and approval process as previously discussed.

3. SCHEDULE

All digital recording shall be done during times of good visibility. No recording shall be done during periods of visible precipitation or when more than ten (10) percent of the ground is covered with snow or standing water unless otherwise authorized by the ENGINEER.

Digital recording shall be done prior to placement of materials or equipment in the construction area. Flash drives containing digital records shall be furnished to the OWNER at least one week prior to the preconstruction meeting.

No construction shall begin prior to review and approval of the digital video by the OWNER.

The OWNER shall have authority to reject all or any portion of the digital recording that does not conform to the specifications. Any coverage that is not acceptable to the OWNER shall be rerecorded at no additional charge. The CONTRACTOR shall reschedule unacceptable coverage within five (5) days after being notified.

MATERIALS

4. EQUIPMENT

All equipment, accessories, and materials necessary to perform this service shall be furnished by the CONTRACTOR and the digital recording firm, except for the plans of the proposed area to be digitally recorded

which are to be furnished by the OWNER. The CONTRACTOR shall be responsible for providing any temporary warning signs or barricades if required during the digital recording operations. Digital recordings shall be on high-quality flash drives for lossless picture quality, suitable for uploading and viewing on standard computer systems.

In some instances, digitally recorded coverage may not be suitable for recording necessary details. In such instances, the ENGINEER may specify digital still photographs to provide coverage. Digital photography must be used and the firm shall provide a flash drive containing digital records of all images. A suitable labeling system and description of the location of the photograph shall accompany the photographs in PDF form on the flash drive with the digital photographs.

5. DIGITAL RECORDING

Each digital recording shall begin with the current date, project name, and municipality as well as the general location or station, name of the street, viewing side, and direction of progress. Houses and buildings shall be identified by address.

When conventional wheeled vehicles are used, the distance from camera lens to the ground shall not be less than ten (10) feet to insure proper perspective.

In some instances, digitally recorded coverage will be required in areas that are not accessible by conventional wheeled vehicles. Such coverage shall be obtained by walking or special conveyance approved by the ENGINEER.

The engineering stationing numbers shall be continuous and accurate and shall correspond to the project stationing within the field of view. Standard engineering symbols (for example, 14 + 84) shall appear in the upper left of the viewing screen.

Beneath the engineering stationing, periodic transparent alphanumeric information consisting of the project name, location, direction of travel, viewing side, etc., shall appear.

Global Positioning System Satellites may be used in place of or in addition to engineering stationing numbers where available. The global positioning system shall provide updates at one (1) per second and have an accuracy of five (5) meters or less spherical accuracy. The GPS coordinate display will be at one (1) meter longitude and l meter latitude. (example: 3000N423 9456W294)

To preclude the possibility of tampering or editing in any manner, all digital recordings shall, by electronic means, display continuously and simultaneously generated transparent digital information to include the date and time of recording, as well as corresponding GPS coordinates and/or engineering stationing numbers. The date information will contain the month, day and year (for example, 10/5/06) and be placed directly below the time information. The time information shall consist of hours, minutes and seconds separated by colons (for example 10:35:18). This transparent information shall appear on the extreme upper left-hand of the screen.

Each digital recording mush be taken at 4K resolution (3840 pixels × 2160 lines), 16:9 aspect ratio, and 60 FPS. File types can include .MP4 and .MOV. Prohibited file types include .MEPG, .FLV, .WMV, and.SWF.

6. DIGITAL VIDEO TRACKS

Digital recordings shall consist of one (1) video and two (2) audio tracks, all of which must be recorded simultaneously. All tracks shall consist of original live recordings and thus shall not be copies of other audio or digital video recordings. Audio track one (1) shall contain the narrative commentary of the camera technician and shall be recorded

simultaneously with his fixed elevation video record of the area of construction. Audio track two (2) shall contain the narrative commentary and evaluations of the ground level remote technician whose function shall be to provide a complete circumspection of any features that are not adequately visible to the camera technician. In order to maintain viewer orientation, transition from a fixed camera overview to a remote camera picture shall be accomplished by means of an electronic dissolve.

7. LIGHTING REQUIREMENTS

In order to produce proper detail and perspective, adequate lighting will be required to fill in the shadow areas caused by trees, utility poles, road signs and other such objects.

For interior and exterior surfaces of existing buildings, a 500 LED light source with 30W of power consumption and a color range between 3200K-5600K is required to enable all objects to be distinctive and clearly video taped with correct detail in order to obtain proper perspective. The CONTRACTOR shall provide all power required for lighting.

8. DIGITAL VIDEO COVERAGE

a. Construction Zone

Digital video coverage shall include all surface features located within the zone of influence of construction and shall be supported by appropriate audio description. Such coverage shall include, but not be limited to, public right-of-way, easement areas, adjacent private property, all existing driveways, sidewalks, curbs, ditches, roadways, landscaping, trees, shrubs, fences, culverts, headwalls, retaining walls, and buildings located within such zone of influence. Of particular concern shall be the existence of any faults, fractures, or defects.

Houses and buildings shall be identified visually by house number when visible. Manholes or other utility structures shall also be identified.

The rate of travel used during digital recording shall not exceed forty-eight (48) feet per minute. Panning rates and zoom-in/zoom-out rates shall be controlled sufficiently such that stop action during playback will produce clarity of the object viewed.

The ENGINEER shall have the authority to designate areas for which coverage may be added or omitted.

b. Interior and Exterior Surfaces

Building exterior coverage shall include, but not be limited to, all the masonry features of the building such as walls, foundations, chimneys or porches. Building interiors shall include, but not be limited to, all outside basement walls and flooring.

All property being digitally recorded for interior record must have a permanent exterior front view recorded on video displayed in upper right-hand corner of the viewing screen for positive identification of property. This view will be no larger than twenty percent (20%) of the picture area and must begin by showing the address. The camera technician shall pan and zoom in and out as necessary to control the clarity of objects being viewed.

All digital recording shall be done during regular business hours unless otherwise authorized by the OWNER or agreed to by an affected property owner.

9. DIGITAL RECORDING FIRM RESPONSIBILITIES

The digital recording firm may televise and record areas within public rights-of-way, along municipal-owned easements, through municipal-owned parks, and municipal buildings. When digital recording is to be done on private property, the digital recording firm shall give the OWNER

sufficient prior notice so that the property owners may be contacted and their permission obtained for the work.

Three (3) attempts must be logged by the camera technician to complete the video project at each location, and a log sheet describing the day, time, and disposition of the contact must be kept.

At no time will the digital recording firm be allowed to use any electrical circuits located inside or outside buildings on private property. The digital recording firm must enter and leave property in a professional and orderly manner.

10. VIDEO INDENTIFICATION AND SUBMITTAL

All flash drives containing digital records shall be properly identified by number, location, project name, and municipality in a manner that is acceptable to the OWNER.

A record of the contents of each flash drive shall be supplied by a log sheet that identifies each segment in the digital recording by location, roll number, street or road viewing, viewing side, starting point, traveling direction, and ending point.

A minimum of three flash drives containing digital records shall be provided upon final approval and acceptance of the videos by the OWNER and ENGINEER (one set each for the OWNER, ENGINEER, and CONTRACTOR). Additional sets shall be furnished if requested by the OWNER.

End of Section

RESTORATION

Table of Contents

General

1. Scope of Work....1
2. Shop drawings....1
3. MDOT Standards....1

Materials

4. Aggregate....2
5. Bituminous Surface, Leveling, & Base Courses....2
6. Concrete Pavement, Sidewalks, Curb & Gutter....2
7. Topsoil....2
8. Seed & Fertilizer....3
9. Mulch & Mulch Blankets....3
10. Sod....4
11. Fencing....4
12. Trees & Shrubs....4
13. Timber Posts....4
14. Traffic Signs & Posts....4

Construction

15. Pavement Striping....4
16. Pavement Restoration....4
17. Turf Establishment....6
18. Fencing....7
19. Guardrail....8
20. Tree & Shrub Planting....8
21. Mailboxes....8
22. Traffic Signs & Posts....8
23. Permanent Pavement Striping....8
24. Drainage Structures, Culverts, & Ditches....8
25. Progress of Final Restoration....8

GENERAL

1. SCOPE OF WORK

This work shall be subject to conditions of the General Conditions, General Specifications and include the furnishing of labor, materials, tools, accessories, equipment and services necessary for restoration of the surfaces shown on the Contract drawings and/or as herein required.

This work shall include replacement of all permanent type roadway surfaces, concrete sidewalks, curb and gutters, driveways, trees, culverts, fences, ditches, and miscellaneous items damaged or removed due to construction. Disposal of excess or unsuitable materials shall be considered as part of the restoration work. All such work shall be in accordance with the best modern practice, the OWNER's standards, and as specified herein.

Prior to performing work under this section, the CONTRACTOR shall submit to the ENGINEER for approval his construction methods and design mixes, sieve analysis and/or certification of compliance with the 2020 Michigan Department of Transportation (MDOT) Standard Specifications for Construction except where otherwise noted. No permanent surface restoration shall be performed until all underground work has been approved.

In the event that these specifications conflict with those of the OWNER or the controlling agency, the more stringent requirements shall govern.

2. SHOP DRAWINGS

When required by the ENGINEER, shop drawings shall be furnished as prescribed under the General Conditions.

Before the CONTRACTOR orders any restoration materials that he is proposing to use as substitutes for specified items, he shall submit details of the substitutes to the ENGINEER for consideration and approval.

3. MDOT STANDARDS

References to the Michigan Department of Transportation (MDOT) Specifications shall pertain to the 2020 Standard Specifications for Construction.

MATERIALS

4. AGGREGATE

a. Gravel Approaches and Roads

Natural aggregate shall be used for gravel appproach (driveways) and road restoration and shall meet the requirements of MDOT 21AA or 22A as shown in Table 902-1 of the MDOT Standard Specifications for Construction.

b. Shoulders

Natural aggregate shall be used for shoulders and shall meet the requirements of MDOT 21AA, 22A, or 23A as shown in Table 902-1 of the MDOT Standard Specifications for Construction.

c. Base Course

Natural aggregate shall be used for base course construction and shall meet the requirements of MDOT 21A, 21AA, or 22A as shown in Tables 902-1 and 902-2 of the MDOT Standard Specifications for Construction.

5. HOT MIX ASPHALT SURFACE, LEVELING, & BASE COURSES

Hot mix asphalt materials used for pavement construction shall meet the requirements of section 501.02 of the MDOT Standard Specifications for Construction or the requirements of the controlling agency as called for on the construction plans.

6. CONCRETE PAVEMENT, SIDEWALKS, CURB & GUTTER

Concrete used for pavement, sidewalk, and curb and gutter construction shall meet the requirements of MDOT grade P1 concrete or the requirements of the controlling agency as called for on the construction plans. MDOT grade P-NC may also be used where circumstances require the use of a high-early strength concrete. Refer to Table 1004-1 of the MDOT Standard Specifications for Construction.

7. TOPSOIL

Topsoil shall be screened and shall consist of loose black-colored soil that is suitable for the growth of grass seed or sod. The topsoil shall be obtained from the upper layer of an existing fertile soil and be free of limbs, twigs, rocks, stones, muck, roots and debris, etc. and containing organic matter rich in nutrients with negligible clay content.

Topsoil shall meet the following requirements:

a. The pH range shall be from 6.0 to 7.5. Topsoil outside of this range shall be amended by the addition of pH adjusters as approved by the Engineer.

b. The organic matter content shall range between 2% and 6% (by dry sample weight).

c. The soil texture shall be a sandy loam, silt loam, or loam where the sand, silt, and clay contents (by dry sample weight) fall within the following ranges:

Sand.....40% to 65%
Silt.....25% to 60%
Clay.....5% to 15%

d. The gradation shall be as follows:

Sieve Designation	% Passing
1 inch screen	100
0.25 inch screen	97 - 100
No. 10 U.S.S. mesh sieve	95 - 100
No. 140 U.S.S. mesh sieve	15 - 35

e. The soil salinity as measured by the electrical conductivity of a saturated soil

sample shall not exceed 2dS/m (decisiemens/meter).

f. Topsoil samples may be taken from stockpiles by the ENGINEER for submission to a testing laboratory. Topsoil that does not meet the required specifications shall be removed from the project site by the CONTRACTOR and shall be replaced with suitable topsoil that meets the testing requirements.

8. SEED & FERTILIZER

Seed and fertilizer shall meet the following requirements:

Table R-1

Location	Seeding* Requirement	Fertilizer Requirement
Maintained Lawn Areas	MDOT Type THM Mix (20% Perennial Rye, 30% Kentucky Blue, 50% Red Fescue) applied at 220 lbs./acre	MDOT Class A, 176 lbs./acre
Fields, Slopes & Ditch Banks, Etc.	MDOT Type THV Mix (30% Perennial Rye, 15% Kentucky Blue, 45% Red Fescue, 10% Fults Salt) applied at 220 lbs./acre	MDOT Class B, 120 lbs./acre

* percent mixture proportions by weight

All grass seeding shall meet the requirements for purity and germination as called for in the MDOT Standard Specifications for Construction Table 917-2 for Seed Mixtures. Seed shall be delivered in durable containers which show the manufacturer's name, lot number, weight, contents, purity, and germination. Although Table R-1 lists only two typical seeding mixtures, other seeding mixtures shown in MDOT Tables 816-1 and 917-2 may be used where approved by the Engineer.

9. MULCH & MULCH BLANKETS

Mulch and mulch blankets shall meet the following requirements:

a. Loose Mulch. Mulching material shall consist of any straw or marsh hay in an air-dry condition. Hay in an air-dried condition will be permitted only when straw mulch or marsh hay is unavailable. Mulch materials shall be undamaged, rot free, clean, substantially free of weed seed and other objectionable foreign matter.

b. Mulch Blankets (for moderate runoff condition). Mulch Blankets shall be one of the following or an approved equal:

S1 Erosion Control Blanket – BonTerra America

Contech ERO-MAT - Contech Construction Products

Erosion Control Blanket DS-75 – North American Green

c. High Velocity Mulch Blankets (for medium to heavy runoff condition). High velocity mulch blankets shall be one of the following or an approved equal:

S2 Erosion Control Blanket – BonTerra America

Contech High Velocity ERO-MAT – Contech Construction Products

ECS High Impact Excelsior Blanket – Erosion Control Systems, Inc.

ECS Hich Velocity Straw Mat –
Erosion Control Systems, Inc.

Erosion Control Blanket DS-150 –
North American Green

10. SOD

Sod shall meet the requirements of Section 917.12 of MDOT Standard Specifications for Construction. The Contractor shall keep the sod watered until a vigorous growth is established.

Sod must be an upland mineral soil sod. Sod must be grown on loam soils. Sod grown on peat is not acceptable for use.

11. FENCING

Chain link and woven wire fence materials shall meet the requirements of Section 907 of MDOT Standard Specifications for Construction. Chain link fabric shall be as called for on the construction drawings (aluminum-coated, zinc-coated, or vinyl-coated). Fences made of other materials (wood board, split rail, iron, etc.) shall be replaced in kind or as called for on the construction drawings. In this case, fence materials and construction methods shall meet the applicable standards of ASTM.

12. TREES & SHRUBS

Trees and shrubs shall be quality, nursery-grown stock with adequate root growth (balled and burlapped). Nursery stock shall meet the standards of the current edition of the American Standard for Nursery Stock as published by the American Association of Nurserymen, as well as the standards of Section 917 of the MDOT Standard Specifications for Construction.

13. TIMBER POSTS

Timber used for fence, guide, guard and mailbox posts shall meet the requirements of Section 912.08 of the MDOT Standard Specifications for Construction.

14. TRAFFIC SIGNS & POSTS

Traffic and street signs that are removed or damaged shall be replaced in kind. The materials used for such sign and post replacements shall meet the applicable standards of Section 919 of the MDOT Standard Specifications for Construction.

15. PAVEMENT STRIPING

Pavement striping materials shall meet the requirements shown in Section 920 of the MDOT Standard Specifications for Construction.

CONSTRUCTION

16. PAVEMENT RESTORATION

The aggregate and pavement thicknesses shown in the following sections are intended to be a guideline for minimum thicknesses. Thicker sections may be required depending upon the requirements of the OWNER or the controlling agency. All pavements shall be restored to the elevation and section that existed prior to construction.

a. Gravel Shoulders and Approaches

Gravel shoulders and approaches shall be constructed as described in Section 307.03 of the MDOT Standard Specifications for Construction.

Gravel shoulder restoration shall consist of placement and compaction of MDOT 21AA limestone or MDOT 22A gravel on a suitable subgrade to form a minimum six (6) inch thick section. The 21AA limestone or 22A gravel shall be compacted to a minimum density of ninety-eight (98) percent of the maximum unit weight. The restored shoulder width shall match the existing width.

Restoration of gravel approaches shall consist of placement and compaction of MDOT 21AA limestone or MDOT 22A gravel on a suitable subgrade as called for

on the plans to form a minimum six (6) inch thick section. The 21AA limestone or 22A gravel shall be compacted to a minimum density of ninety-eight (98) percent unit of the maximum unit weight. The restored approach width shall match the existing width.

b. Gravel Roads

Restoration of gravel roads shall consist of placement and compaction of MDOT 21AA limestone, MDOT 22A gravel, or MDOT 23A gravel as called for in the plan details to form a minimum eight (8) inch thick section. The restored road width shall match the existing road width. Gravel roads shall be constructed as described in Section 306.03 of the MDOT Standard Specifications for Construction.

c. Aggregate Base Courses

Aggregate base courses shall be placed and compacted to the thickness and width as called for on the plan details and as described in Section 302.03 of the MDOT Standard Specifications for Construction. Unless otherwise indicated in the Suppplemental Specifications, aggregate base courses shall be compacted to a minimum density of ninety-eight (98) percent of the maximum unit weight.

d. Sawcutting

All pavement, curb and gutter, and sidewalk removals shall be accomplished by sawcutting with a power-driven concrete saw. Sawcutting shall be full depth for all pavements (concrete, bituminous, concrete with bituminous overlay).

In bituminous pavement, sawcut lines shall be parallel with or perpendicular to the direction of vehicle travel.

In concrete pavement, sawcut lines shall be cut parallel with pavement joints. Sawcuts shall not be nearer than five (5) feet to a transverse joint, to the center of pavement, or to the edge of pavement such that no existing or replacement pavement section shall be less than five (5) feet in width. If the proposed sawcut is nearer than five (5) feet to a joint or centerline of a pavement, then removal and replacement shall be extended to said joint or centerline.

If an integral concrete curb is to be removed, then the minimum removal width shall be eighteen (18) inches.

e. Hot Mix Asphalt (HMA) Pavement

Hot mix asphalt pavements shall be constructed in accordance with the plan details and Section 501 of the MDOT Standard Specifications for Construction. Where new asphalt pavement is to adjoin existing asphalt pavement, a two (2) foot wide butt joint shall be constructed. A bond coat shall be applied to the existing pavement surface. Unless otherwise called for in the plan details, the following sections shall apply as a minimum:

Bike paths:	3” HMA over 4” 21AA aggregate base (with soil sterilant application)
Residential driveways:	3” HMA over 6” 21AA aggregate base
Commercial driveways:	4” HMA over 8”21AA aggregate base; or 8” asphalt
Residential streets:	4” HMA over 8” 21AA aggregate base; or 8” asphalt
Collector road:	9” HMA over 6” 21AA aggregate base

The laboratory density of HMA pavement shall be determined by the Marshall Procedure ASTM D-1559 using 50 blows on each of the specimens as the compactive effort. One set of three (3) specimens shall be made on the first day of placement and on subsequent days as determined by the Engineer.

The measurement of field-compacted density shall be done with a nuclear gage. The percent of compaction obtained shall be determined by dividing the field-compacted density by the laboratory density and multiplying the result by 100. Unless otherwise indicated in the plan details or Supplemental Specifications, all HMA pavements shall be compacted to a minimum calculated density of 97%.

Density tests shall be taken on the completed pavement at a frequency of one test every 500 linear feet of paving lane, except for the last unit which will be 500 linear feet, plus any fractional unit less than 250 feet in length, or will be a fractional unit of 250 feet or more in length. Miscellaneous areas such as intersections, crossovers and widening lanes less that 250 feet long will be tested as directed by the Engineer.

f. Concrete Pavement

Concrete pavements shall be constructed in accordance with the plan details as well as Sections 602 and 801 of the MDOT Standard Specifications for Construction. Where new concrete pavement is to be anchored to old pavement, dowel bars and lane ties shall be installed in accordance with MDOT Standard Plans. Joints shall be installed in the new concrete pavement to match existing joint types and locations. Reinforcing steel shall be similar to that in the existing pavement and shall provide the same cross sectional area of reinforcement per foot as the existing pavement. Unless otherwise called for in the plan details, the following sections shall apply as a minimum:

Residential driveways:	6” non-reinforced concrete over 4” sand base
Commercial driveways:	8” non-reinforced concrete over 4” sand base
Residential streets:	8” non-reinforced concrete over 6” sand base
Collector road:	9” non-reinforced concrete over 6” sand base

g. Concrete Sidewalk and Ramps

Concrete sidewalks and ramps shall be constructed in accordance with the plan details and Section 803 of the MDOT Standard Specifications for Construction. Unless otherwise called for in the plan details, the following sections shall apply as a minimum:

Sidewalks:	4” concrete over 4” sand base
Sidewalks (at residential drive crossing):	6” concrete over 4” sand base
Sidewalks (at commercial drive crossing):	8” concrete over 4” sand base
Sidewalk ramps:	4” concrete over 4” sand base

h. Concrete Curb and Gutter

Concrete curb and gutter shall be constructed in accordance with plan details and Section 802 of the MDOT Standard Specifications for Construction.

17. TURF ESTABLISHMENT

The CONTRACTOR shall furnish and place topsoil, seed, or sod, and fertilizer for all areas that were disturbed during construction. Seed and sod shall be installed in accordance with the seasonal limitations that are described in section 816.03 of the MDOT Standard Specificiations for Construction unless directed otherwise by the Engineer.

a. Topsoil

Unless otherwise called for on the plans, a minimum of three (3) inches of topsoil shall be placed for areas that are to be restored with seeding or sodding. Topsoil shall be placed on a prepared earth bed in accordance with Section 816.03A of the MDOT Standard Specifications for Construction.

The existing earth bed shall be graded such that the placement of topsoil and sod will meet the final plan grades.

b. Seed

Seeding shall be sown in accordance with Section 816.03C of the MDOT Standard Specifications for Construction. The application rate for the seeding shall be as shown in the table in part 8 of the Materials Section.

c. Mulch and Mulch Blankets

Mulch and mulch blankets shall be placed over seeded areas as called for in Section 816.03E through G of the MDOT Standard Specifications for Construction. If mulch blankets must be secured to a slope, then biodegradable netting and biodegradable earth staples shall be used.

Mulch anchoring shall be considered as incidental to mulch placement unless a pay item for mulch anchoring has been included in the Bid Form.

d. Sod

Sod shall be placed in accordance with Section 816.03D of the MDOT Standard Specifications for Construction.

A sod cutter shall be used to establish a smooth vertical edge when new sod is to abut existing sod.

e. Fertilizer

Fertilizer shall be placed in accordance with Section 816.03B of the MDOT Standard Specifications for Construction. The application rate for the fertilizer shall be as shown in table in Part 8 of the Materials Section.

f. Watering and Maintenance

It is the responsibility of the CONTRACTOR to regularly water new seed and sod in order to establish a dense lawn of permanent grasses that is free from mounds and depressions. Any portion of a sodded area that "browns-out" or does not firmly knit to the soil base, or any portion of a seeded area that fails to show a uniform germination, shall be resodded or reseeded. Such resodding or reseeding shall be at the CONTRACTOR's expense and shall continue until a dense lawn in established.

Watering seed and sod shall be considered as incidental to the turf establishment work unless a pay item for water has been included in the Bid Form.

18. FENCING

Prior to the start of any fence restoration work, the CONTRACTOR shall verify that the line and grade are correct.

a. Removing and Replacing Existing Fences

Fences shall be removed and replaced or shall be removed as indicated on the Plans or as directed by the ENGINEER. If any of the existing material is damaged or destroyed, the CONTRACTOR shall replace the material at his expense. Replacement fence material shall be of a condition comparable to that which existed prior to construction.

After the fence removal or relocation operations are complete, all surplus material shall be removed and disposed of by the CONTRACTOR at his expense unless

otherwise called for on the Contract Documents.

Any holes or voids resulting from the fence post removal operation shall be backfilled with a suitable material, as approved by the ENGINEER.

b. Placing New Fence

Woven wire and chain link fencing shall be installed in accordance with Sections 808.03B and E of the MDOT Standard Specifications for Construction. If called for on the plans, a top rail shall be used in place of tension wire for the chain link fence construction. Other fence types (timber, boulders, decorative rock, etc.) shall be constructed in accordance with plan details.

19. GUARDRAIL

Guardrail shall be placed in accordance with Section 807 of the MDOT Standard Specifications for Construction. Guardrail design shall be approved by the ENGINEER and shall conform to the current applicable standards of the agency that has jurisdiction of the right-of-way.

Any holes or voids resulting from the guardrail post removal operation shall be backfilled with a suitable material, approved by the ENGINEER.

20. TREE & SHRUB PLANTING

Trees and shrubs shall be planted in accordance with Section 815 of the MDOT Standard Specifications for Construction. Nursery stock shall conform to the standards shown in the American Standard for Nursery Stock (ANSI Z60.1-2014).

Watering and cultivating trees and shrubs during the establishment period shall be considered as incidental to the tree and shrub planting work unless a pay item for watering and cultivating has been included in the Bid Form.

21. MAILBOXES

Where mailbox post replacement is called for on the plans, new mailbox posts shall be furnished and installed in accordance with Section 807 of the MDOT Standard Specifications for Construction and the plan details.

22. TRAFFIC SIGNS & POSTS

Placement of traffic signs and posts shall be done in accordance with the applicable Sections in 810 of the MDOT Standard Specification for Construction, the current edition of the Michigan Manual of Uniform Traffic Control Devices, and the plan details.

23. PERMANENT PAVEMENT STRIPING

Permanent pavement striping shall be placed in accordance with the plan details and Section 811 of the MDOT Standard Specifications for Construction.

24. DRAINAGE STRUCTURES, CULVERTS, & DITCHES

As part of restoration, the CONTRACTOR shall be responsible for cleaning out all drainage structures, culverts, and ditches that are located within the area of construction. All ditches shall be restored such that drainage will flow freely. The cost of this work shall be considered as incidental to the project.

25. PROGRESS OF FINAL RESTORATION

If in the judgement of the OWNER, adequate site restoration efforts are not being expended, including but not limited to, roadway, driveway and drainage maintenance, removal of surplus materials, restoration of all signs, mail boxes and like items, then the OWNER will take the necessary steps to perform such restoration and shall charge the CONTRACTOR for all of the costs until proper order is restored.

End of Section

METHOD OF PAYMENT

GENERAL **2**
Mobilization 3
Audio Video Route Survey 3
Traffic Maintenance and Control 4
Remove Tree 4
Remove Curb and Gutter 4
Remove Fence 5
Remove Pavement 5
Exploratory Excavation 5
Preserve Utility Marker 6
Station Grading 6
Inlet Filter 7
Silt Fence 7
Remove and Reset Salvaged Sprinkler Head 7
Aggregate Base 8
Maintenance Gravel 8
Adjust Structure 8
Hot Mix Asphalt (HMA) Pavement 9
Concrete Pavement 9
Concrete Curb & Gutter 10
Spillway 10
Detectable Warning Surface 10
Concrete Sidewalk 11
Chain Link Fence 11
Remove and Reset Salvaged Sign 11
Pavement Markings 12
Turf Establishment 12
Permit Allowance 13
Easement Conditions 14
Relocate or Brace Utility Poles and Guy Wires 14
Water Valve Box Adjustment 14
Private Utility Adjustment 14
Miscellaneous Restoration Items 14
Final Clean Up 14

GENERAL

A. PRICES AND MEASUREMENT:

Payment for work under this contract will be based on a unit price or lump sum for work actually completed. Final measurements of the work will be taken by the Engineer to determine the amount of work done and thereby determine the total cost. The method of applying the unit prices to measured quantities will be as herein specified. Payment will include the cost of all labor, tools, materials, and equipment necessary to do the work.

Several items may have been included in the bid form but may not be called for on the plans. These items have been included in order to establish a unit price in the event that the item of work is necessary. The Contractor should be aware that these items may increase, decrease, or be zero based on field conditions, or Owner direction.

B. INCIDENTAL ITEMS:

Any items of work indicated as incidental or included shall be considered as part of the project work and shall be completed at no additional expense to the Owner. Incidental or included items shall include labor, materials, and equipment that may not be specifically listed in the Bid Form or in the drawings or specifications, but which are necessary to complete the work.

C. PERMITS:

Some permits have been applied for by the Owner of this project. The permits must be acquired from the appropriate agency by the Contractor when they are approved. Any permit fees, bonds, and/or permit agency inspection costs will be the responsibility of the Contractor and shall not result in additional cost to the Owner. A list of permits required for this project is shown in the Supplemental Instructions to Bidders section.

MOBILIZATION

The completed work as measured for MOBILIZATION will be paid for at the contract unit price for the following contract item (pay item):

Pay Item	Pay Unit
Mobilization, Max. 5%	lump sum

The lump sum price shall be payment in full for all preparatory work and operations which may include, but is not limited to, the following items:

1. The movement of personnel, equipment, supplies, and incidentals to the project site.
2. The establishment of the Contractor's offices, buildings, and other facilities to work on the project.
3. Other work and operations that must be performed.
4. Expenses incurred, prior to beginning work on the various contract items on the project site.
5. Pre-construction costs, exclusive of bidding costs, which are necessary direct costs to the project rather than directly attributable to other pay items under the contract.
6. Permits, bonds, etc.

The pay item will state the maximum amount that can be bid. When the percentage of the original contract amount earned is less than 5 percent, the costs of project specific bonding, insurances, and permits will be reimbursed when a paid invoice is received by the Engineer. The costs of these will then be made in accordance with the Partial Payment Schedule shown below. The original contract amount is the total value of all contract items including the mobilization item. The percentage earned is exclusive of the mobilization item. The total sum of all payments for this item shall not exceed the original contract amount bid for mobilization, regardless of the fact that the Contractor may have, for any reason, shut down his work on the project, moved equipment away from the project and then back again, or for additional quantities or items of work added to the contract.

Partial Payment Schedule

Percentage of Original Contract Amount Earned	**Percentage of Bid Price for Mobilization Allowed**
5	50
10	75
25	100

When a pay item for mobilization is not included in the proposal, payment for any such work is considered to have been included in payments made for other items of work.

AUDIO VIDEO ROUTE SURVEY

The completed work as measured for AUDIO VIDEO ROUTE SURVEY will be paid for at the contract lump sum price for the following contract item (pay item):

Pay Item	Pay Unit
Audio Video Route Survey	lump sum

The lump sum price shall be payment in full for all labor, materials, and equipment necessary to prepare the audio video route survey in accordance with the specifications. Video recording limits are discussed in the Supplemental Specifications section.

Payment shall include the provision of two sets of DVDs containing the complete recordings to the Engineer.

TRAFFIC MAINTENANCE AND CONTROL

The completed work as measured for TRAFFIC MAINTENANCE AND CONTROL will be paid for at the contract unit price for the following contract item (pay item):

Pay Item	Pay Unit
Traffic Maintenance and Control	lump sum

The contract lump sum price shall be payment in full for all labor, materials, and equipment necessary to furnish, install, and maintain all signs, cones, barricades, flagging, etc. as required by the Michigan Manual of Uniform Traffic Control Devices and the Supplemental Specifications. Removal of any temporary signs or other traffic control equipment upon completion of the project shall be considered as incidental to the traffic maintenance and control work.

REMOVE TREE

The completed work as measured for REMOVE TREE will be paid for at the contract unit price for the following contract items (pay items):

Pay Item	Pay Unit
Tree, Rem, 19 inch to 36 inch	each
Tree, Rem, 6 inch to 18 inch	each

The size of trees will be determined by the average diameter of the tree trunk, measured to the nearest full inch, at a point 4 ½ feet above the base of the tree at the ground line. Trees having major limbs lower than 4 ½ feet from the ground shall be measured at the smallest diameter below such limbs.

The contract unit price shall be payment in full for all labor, material and equipment necessary to completely remove the tree, including all foliage and root systems, backfill the remaining hole, and to properly dispose of the materials off site. When tree removal is called for, the payment shall include removal of the stump. Separate payments for tree and stump removal shall not be made for the same tree. Removal of trees under 6" in diameter as well as logs, debris, brush, shrubs, topsoil, and other vegetation will be considered as incidental to Station Grading, Case _.

REMOVE CURB AND GUTTER

The completed work as measured for REMOVE CONCRETE CURB AND GUTTER will be paid for at the contract unit price for the following contract item (pay item):

Pay Item	Pay Unit
Curb and Gutter, Rem	foot

Concrete curb and gutter removal shall be measured along the gutter line in linear foot.

The contract unit price shall be payment in full for all labor, materials and equipment required to sawcut, remove, and properly dispose of the concrete curb and gutter offsite.

REMOVE FENCE

The completed work as measured for REMOVE FENCE will be paid for at the contract unit price for the following contract item (pay item):

Pay Item	Pay Unit
Fence, Rem	foot

Fence removal shall be measured in place by linear feet. The length shall be measured along the base of fence from end to end of the section that is removed.

The contract unit price shall be payment in full for all labor, materials, and equipment necessary for removal and proper offsite disposal of the fence including posts, concrete foundations, rails, gate hardware, and fence fabric. Furnishing, placing, and compacting suitable backfill for the old postholes shall be considered as included in the fence removal work. The payment for fence removal shall be the same regardless of the fence type (chain link, woven wire, board, wood rail, etc.) unless separate fence removal pay items are shown in the bid form.

REMOVE PAVEMENT

The completed work as measured for REMOVE PAVEMENT will be paid for at the contract unit price for the following contract item (pay items):

Pay Item	Pay Unit
Pavt, Rem	square yard
Sidewalk, Rem	square yard

Pavement removal and sidewalk removal shall be measured in place by area in square yards. The removal area shall be based upon the average length and width measurements as determined in the field by the Engineer.

The contract unit price shall be payment in full for all labor, material and equipment required to sawcut, remove, and properly dispose of the pavement or sidewalk off site. The contract unit price shall apply to pavement or sidewalk of any thickness (both bituminous and concrete).

EXPLORATORY EXCAVATION

The completed work as measured for EXPLORATORY EXCAVATION will be paid for at the contract unit price for the following contract item (pay item):

Pay Item	Pay Unit
Exploratory Excavation	each

Exploratory Excavation shall be paid for per test hole dug. The work consists of excavating test holes in order to expose existing public water main, sanitary sewer, storm sewer, sewer leads, water services, or

any other buried utility lines, and determining if there will be possible construction conflicts between existing and proposed utilities.

The contract unit price shall be payment in full for all labor, materials, and equipment necessary to dig test holes and shall include excavation, measurements as necessary, backfill, compaction, and restoration. The Contractor shall coordinate with the Engineer regarding test hole locations in advance of construction in order to allow for possible design changes due to conflicts.

Exploratory Excavation shall be paid only if authorized by the Engineer. Any test hole dug without consent of the Engineer will be done at the Contractor's expense.

Exploratory Excavation will not be paid for test holes dug to locate existing utilities in the path of directional drilling.

PRESERVE UTILITY MARKER

The completed work as measured for PRESERVE UTILITY MARKER will be paid for at the contract unit price for the following contract item (pay item):

Pay Item	Pay Unit
Preserve Utility Marker	each

The contract unit price shall be payment in full for all labor, materials, and equipment necessary to preserve the existing utility markers as shown on the plans.

STATION GRADING

The completed work as measured for STATION GRADING will be paid for at the contract unit price for the following contract item (pay item):

Pay Item	Pay Unit
Station Grading, Case _	station

Station grading shall be measured along the construction centerline of road from point of beginning to point of ending. Measurements shall extend through intersections but will not be taken along intersecting driveways or side streets. One station equals one hundred feet.

The contract unit price shall be payment in full for all labor, materials, and equipment necessary to perform all earthwork for construction of the sidewalk. The contract unit price shall include items such as removing topsoil and vegetation, excavating, grading, and compacting earth along the sidewalk route, stockpiling, sterilizing the subgrade, and finish grading. Furnishing, grading, and compacting suitable embankment material as well as removing excess or unsuitable material shall also be considered as part of the Station Grading work. In addition, root trimming, clearing, brushing, and removal of trees under 6 inches in diameter shall be considered as part of the work unless separate pay items have been included in the bid form.

Station Grading, Case A is to be used for the construction of all new sidewalk. Station Grading, Case B is to be used for the removal and replacement of all existing sidewalk.

INLET FILTER

The completed work as measured for INLET FILTER will be paid for at the contract unit price for the following contract item (pay item):

Pay Item	Pay Unit
Erosion Control, Inlet Protection, Fabric Drop	each

The contract unit price shall be payment in full for all labor, materials, and equipment necessary to furnish, install, and maintain catch basin or inlet filters in accordance with the plan notes and details. Maintenance work will include removal and replacement of filters as directed by the Engineer. Removal and disposal of the filters and accumulated sediment upon final completion of the project shall be considered as included in the work. The work shall also include removal of accumulated sediment from the ground surface and from the drainage structure sumps.

SILT FENCE

The completed work as measured for SILT FENCE will be paid for at the contract unit price for the following contract item (pay item):

Pay Item	Pay Unit
Erosion Control, Silt Fence	foot

Silt fence shall be measured in place horizontally by linear foot. The length shall be measured along the top of fence from end of fence to end of fence.

The contract unit price shall be payment in full for all labor, materials, and equipment necessary to furnish, install, and maintain the silt fence in accordance with the plan notes and details. Removal and disposal of the silt fence and accumulated sediment upon final completion of the project shall be considered as included in the work. Placement and maintenance of stone outlet filters at low points along the silt fence line shall also be considered as included in the silt fence work. Maintenance work will include removal and replacement of silt fence and outlet filters as directed by the Engineer. Restoration of disrupted areas shall be paid for separately under the appropriate surface restoration pay items.

REMOVE AND RESET SALVAGED SPRINKLER HEAD

The completed work as measured for REMOVE AND RESET SALVAGED SPRINKLER HEAD will be paid for at the contract unit price for the following contract items (pay items):

Pay Item	Pay Unit
Sprinkler Line, Salvage and Reset	foot
Sprinkler Head, Salvage and Reset	each

The contract unit price shall be payment in full for all labor, materials, and equipment necessary to remove and salvage existing sprinkler lines and heads, and to reset them in the same location. Any sprinkler heads or lines that are damaged by the contractor shall be replaced in kind with new materials at no additional cost to the Owner.

AGGREGATE BASE

The completed work as measured for AGGREGATE BASE will be paid for at the contract unit price for the following contract items (pay item):

Pay Item	Pay Unit
Aggregate Base, 6 inch	square yard

Aggregate base shall be measured in place by square yards. The area shall be based upon the average length and width measurements of the aggregate placement area as determined by the Construction Observer. Depth measurements will be taken as necessary in order to verify the aggregate base thickness.

The contract unit price shall be payment in full for all labor, materials, and equipment necessary to place, grade, and compact the aggregate base materials. Any earth excavation, subgrade preparation, or material disposal that is required for the aggregate base placement shall be considered as incidental to the work unless separate pay items have been included in the bid form for earthwork. Aggregate base shall be 21AA limestone, or approved equal by the Engineer.

MAINTENANCE GRAVEL

The completed work as measured for MAINTENANCE AGGREGATE, 21AA will be paid for at the contract unit price for the following contract item (pay item):

Pay Item	Pay Unit
Maintenance Gravel	ton

Maintenance gravel shall be measured in tons based upon certified weight delivery tickets. The aggregate shall be used at various locations for temporary maintenance of local traffic and shall be considered for payment only where authorized by the Engineer.

The contract unit price shall be payment in full for all labor, materials, and equipment necessary to place, grade, and compact 21AA limestone or gravel where authorized by the Engineer. Removal of the maintenance aggregate shall be considered as incidental to the placement work.

ADJUST STRUCTURE

The completed work as measured for ADJUST STRUCTURE will be paid for at the contract unit price for the following contract items (pay item):

Pay Item	Pay Unit
Utility Structure Cover, Adj	each

The work of adjusting structures shall be paid for on a per structure basis and shall apply when the total amount of vertical change of the casting (up or down) is six inches or less. The pay item for adjusting utility structures shall apply to existing manholes, catch basins, inlets, gate wells, curb stop boxes, etc.

The contract unit price shall be payment in full for all labor, material, and equipment necessary to adjust structures in accordance with the plan details so that the castings will match the new finished pavement or landscape surface grades. Excavation, backfill, cleaning the existing casting and disposal of excess or unsuitable materials shall all be considered as included as part of the adjustment work.Bottom of Form

HOT MIX ASPHALT (HMA) PAVEMENT

The completed work as measured for HOT MIX ASPHALT (HMA) PAVEMENT will be paid for at the contract unit price for the following contract items (pay items):

Pay Item	Pay Unit
Hand Patching	ton
HMA, 4EML	ton

HMA pavement for mainline road paving shall be measured in tons based upon certified weight delivery tickets.

HMA pavement construction for driveway approaches and pathways shall be measured in place by square yards and shall be based upon the pavement length and width measurements as determined by the Engineer. Longitudinal measurements shall be made along the centerline of pavement from end to end. Transverse measurements shall extend from edge of pavement to edge of pavement. The Contractor must provide certified weight delivery tickets to the Construction Observer.

Pay items that are designated as “driveway” shall apply to driveway approach paving work. Pay items that are designated as “path” shall apply to bike path or safety path pavement construction. Pay items that have no designation shall apply to main line road paving.

The contract unit price shall be payment in full for all labor, materials, and equipment necessary to construct the HMA pavement in accordance with the plan details. Furnishing and applying bond coats, pavement compaction, and protection of the work shall all be considered as incidental to HMA pavement construction. For bike or safety path paving, the contract unit price shall also include the application of a suitable soil sterilant (Pramitol 25E or approved equal) on the Subgrade prior to paving. The application method and coverage rate shall be in accordance with the manufacturer’s recommendations.

CONCRETE PAVEMENT

The completed work as measured for CONCRETE PAVEMENT will be paid for at the contract unit price for the following contract items (pay items):

Pay Item	Pay Unit
Conc Pavt, Nonreinf, 6 inch	square yard
Driveway, Nonreinf Conc, 8 inch	square yard

Concrete pavement shall be measured in place by square yards and the area shall be based upon the pavement length and width measurements as determined by the Engineer. Longitudinal measurements shall be made along the centerline of pavement from end to end. Transverse measurements shall extend from edge of pavement to edge of pavement. If the concrete pavement has an integral curb, then the transverse measurement shall extend to the back of curb so that the integral curb is included in the pavement area calculation.

The contract unit price shall be payment in full for all labor, materials, and equipment necessary to form, place, cure, and protect the concrete pavement in accordance with the plan specifications. Concrete pavement joints and joint sealing shall be considered as included in the pavement construction work.

Backfilling behind curbs or along pavement edges shall also be considered as incidental to the concrete pavement construction.

CONCRETE CURB & GUTTER

The completed work as measured for CONCRETE CURB & GUTTER will be paid for at the contract unit price for the following contract items (pay items):

Pay Item	Pay Unit
Curb & Gutter, Conc, Det F4	foot
Driveway Opening, Conc, Detail M	foot
Curb Ramp Opening, Conc	foot

Concrete curb & gutter, M-openings, and curb ramp openings shall be measured in place by linear foot. The length shall be measured along the gutter line from end of curb to end of curb. Curb endings and curb drops shall all be measured and paid for as concrete curb and gutter, detail F4.

The contract price shall be payment in full for all labor, materials, and equipment necessary to construct the concrete curb and gutter in accordance with the plan details. Any excavation, subgrade compaction, backfilling behind the curb, disposal of excess materials, joints, curing compound, and placement of curb drops shall be considered as incidental to the curb and gutter construction.

SPILLWAY

The completed work as measured for SPILLWAY will be paid for at the contract unit price for the following contract item (pay item):

Pay Item	Pay Unit
Spillway, Conc	foot

Spillways shall be measured in place by linear foot. The length shall be measured along the gutter line as measured in the field by the Engineer.

The contract unit price shall be payment in full for all labor, materials, and equipment necessary to construct the spillway in accordance with the plan details. Any excavation or subgrade separation that is required shall be considered as incidental to the spillway construction.

DETECTABLE WARNING SURFACE

The completed work as measured for DETECTABLE WARNING SURFACE will be paid for at the contract unit price for the following contract item (pay item):

Pay Item	Pay Unit
Detectable Warning Surface	foot

The work of placing detectable warning surfaces shall be measured in linear foot as determined by the Engineer.

The contract unit price shall be payment in full for all labor, materials, and equipment necessary to construct the 24” detectable warning strips as shown on the construction sheet.

CONCRETE SIDEWALK

The completed work as measured for CONCRETE SIDEWALK will be paid for at the contract unit prices for the following contract items (pay items):

Pay Item	Pay Unit
Sidewalk, Conc, 4 inch	square foot
Sidewalk, Conc, 6 inch	square foot
Curb Ramp, Conc, 6 inch	square foot

Concrete sidewalk and ramps shall be measured in place and shall be paid for based upon the length and width measurements of the sidewalk area as determined by the Engineer.

The contract unit price shall be payment in full for all labor, materials, and equipment necessary to construct sidewalk of the required thickness in accordance with the plan details. Furnishing, placing, and compacting a 4-inch thick sand base shall be considered as incidental to the sidewalk placement. Any necessary excavation, backfill, and disposal of excess materials shall also be considered as incidental to the sidewalk construction.

CHAIN LINK FENCE

The completed work as measured for CHAIN LINK FENCE will be paid for at the contract unit price for the following contract item (pay item):

Pay Item	Pay Unit
Fence, Chain Link, 48 inch	foot

Chain link fence shall be measured in place horizontally by linear feet. The length shall be measured along the base of fence from end of fence to end of fence. Fence gates will not be included in this measurement since they will be measured and paid for separately as chain link fence gates.

The contract unit price shall be payment in full for all labor, materials, and equipment necessary to install the fence in accordance with the plan details. Posts, concrete foundations, bracing posts, top rail, fence material and hardware shall all be considered as included in the fence construction work.

REMOVE AND RESET SALVAGED SIGN

The completed work as measured for REMOVE AND RESET SALVAGED SIGN will be paid for at the contract unit price for the following contract item (pay item):

Pay Item	Pay Unit
Sign, Salv and Reset	each

The contract unit price shall be payment in full for all labor, materials, and equipment necessary to remove and salvage the existing sign and post and then reset the existing sign and post in accordance with plan details. Any signs or posts that are damaged by the Contractor during the removal work shall be replaced in kind by the Contractor at no additional cost to the Owner. Furnishing, placing and compacting suitable backfill in the old postholes shall be considered as included in the sign removing and resetting work. If more than one sign exists on a single post, then a separate payment shall apply for each sign that is reset.

PAVEMENT MARKINGS

The completed work as measured for PAVEMENT MARKINGS will be paid for at the contract unit prices for the following contract item (pay item):

Pay Item	Pay Unit
Pavt Mrkg, Polyurea, 12 inch, Crosswalk	foot

Pavement striping shall be measured in place horizontally by linear foot. The length shall be measured along the painted segment from end to end of paint marks. Pavement marking symbols and legends shall be counted and paid for by each.

The contract unit price shall be payment in full for all labor, materials, and equipment necessary to furnish and install the pavement markings in accordance with the plan details and the manufacturer's instructions. All sweeping and preparatory work as well as traffic control and temporary protection of newly placed markings shall be considered as incidental to the pavement marking work. Removal of any temporary pavement markings shall also be considered as incidental unless the Bid Form already includes pay items for removing temporary markings.

TURF ESTABLISHMENT

The completed work as measured for TURF ESTABLISHMENT will be paid for at the contract unit price for the following contract items (pay item):

Pay Item	Pay Unit
Turf Establishment	station

Turf establishment with seed shall be measured in place using the pathway alignment stationing**.** All materials, labor and equipment required or selected by the Contractor to install, maintain, inspect, repair and meet the acceptance parameters for turf establishment, including preparation, updating and submittal of the Contractor's Daily Reports, are included in the contract unit price bid for "Turf Establishment". Turf establishment pay item shall include 3 inches of topsoil, seed, and mulch.

Repairs made to damaged turf establishment areas as a result of a documented storm by local meteorological data resulting in rainfall amounts of more than 3 inches in a 24-hour period will be paid for as an increase to original quantities in accordance with subsection 109.05 of the Standard specifications for Construction. The following schedule of payment applies to work performed according to this special provision. Upon completion of topsoil surfacing stage, 50 percent of the authorized amount for Turf Establishment will be paid to the Contractor. The remaining 50 percent of the authorized amount will be paid upon completion of all other work necessary to comply with this special provision and to meet all final acceptance parameters for Turf Establishment or at such time as the supplemental performance bond is accepted by the Department.
The supplemental performance bond and all costs associated with turf establishment work performed during the duration of the performance bond, will not be paid for separately. These costs which may include, but are not limited to, mobilization, traffic control devices, and the required permit insurance are included in the unit price bid for "Turf Establishment".

Application of mulch anchoring shall be considered included in the placement of the mulch unless a separate pay item for the mulch anchoring has been included in the Bid Form.

PERMIT ALLOWANCE

The completed work as measured for PERMIT ALLOWANCE will be paid for at the contract unit price for the following contract items (pay item):

Pay Item	Pay Unit
Permit Allowance	dollar

The completed work as measured for the permit allowance shall include actual permit and/or inspection fees only as assessed by the permit issuer. The CONTRACTOR is required to submit receipts to the ENGINEER for reimbursement. Final reimbursement will be paid upon proper close out of each permit.

Bond(s) and insurance requirements to fulfill permit conditions to the governmental agencies and/or permit issuer will not be paid for separately but considered in other contract pay items.

EASEMENT CONDITIONS

The Contractor shall be required to review and comply with easement conditions that are shown on the plans or contract documents. Compliance with easement conditions shall be considered as incidental to the overall project cost.

RELOCATE OR BRACE UTILITY POLES AND GUY WIRES

The cost of relocating or bracing utility poles and guy wires, including all labor, materials, machinery and equipment, shall be considered incidental to the project and no extra payment shall be made for such work.

WATER VALVE BOX ADJUSTMENT

Adjustment of water valve boxes, if required, shall be considered as incidental to the project cost. The Contractor shall furnish all labor, materials, tools and equipment required to adjust boxes from the existing elevation to the finished elevations.

PRIVATE UTILITY ADJUSTMENT

Adjustment and/or relocation of private utility structures such as gas valves, structure covers, riser boxes, etc. shall be considered as incidental to the project. The Contractor shall furnish all labor, materials, tools, and equipment required to adjust private utility structures to the finished elevations. If private utility structures are to be adjusted and/or relocated by their respective owners, then the Contractor shall be responsible for coordinating this work with the private utility owner as incidental to the project.

MISCELLANEOUS RESTORATION ITEMS

Restoration of miscellaneous items such as, but not limited to, street signs, traffic signs, shrubbery and other ornamental landscape items which are damaged, removed, or destroyed by the Contractor in the course of the work shall be repaired or replaced by the Contractor with new materials of equal quality as existed prior to the start of work. All such items for which specific bid items are not listed in the proposal shall be considered as incidental work and shall be replaced or repaired at the expense of the Contractor.

FINAL CLEAN UP

Final clean up of the job shall be considered as incidental. Items in this category include removal of debris and litter from the site, removal of surplus materials, sweeping, repair of any damages, and clean out of drainage structures located within the work area.

Surface Restoration shall commence immediately upon completion of final grading or as MDOT seasonal limitations dictate.

SUPPLEMENTAL SPECIFICATIONS

1. General....2
2. Location of Project....2
3. Scope of Project....2
4. Construction Standards....2
5. Progress Meetings....2
6. Incidental Contract Items....2
7. Project Coordination With Owner & Other Contractors....2
8. Fair Employment Practices Act....3
9. Observation of Construction....3
10. Hours of Work....3
11. Testing & Sampling....3
12. Staking....4
13. Station Grading....4
14. Traffic Maintenance & Control....5
15. Load Restrictions on Local Streets....7
16. Utilities....7
17. Emergency Repair....8
18. Use of Water....9
19. Asphalt and Pavement Construction....9
20. Mail/Newspaper Boxes....9
21. Audio-Video Recordings....9

1. GENERAL

These Supplemental Specifications are supplements to the General Conditions and General Specifications. Where conflicts exist between the aforementioned Contract Documents, the conditions in the Supplemental Specifications shall govern.

2. LOCATION OF PROJECT

The project site is located in Ypsilanti Township along Ridge Road between Holmes Road and approximately Mott Road.

3. SCOPE OF PROJECT

The work to be done under this Contract includes the furnishing of all materials, equipment, and labor necessary for construction of new sidewalk, a new bus stop pad, minor improvements to an existing bus stop, and a mid-block crossing, as well as all necessary earthwork, cleaning, and restoration in accordance with the plans and specifications.

4. CONSTRUCTION STANDARDS

It is the intention of these specifications to construct all work in accordance with applicable requirements of the Charter Township of Ypsilanti, the Ypsilanti Community Utility Authority (YCUA), the Washtenaw County Road Commission (WCRC), the Washtenaw County Water Resources Commissioner (WCWRC), the Detroit Water and Sewerage Department, the Michigan Department of Environmental Quality, and the Michigan Department of Transportation, these specifications, and the plans referenced herein. Where there is a conflict between any of the aforementioned specifications and the permit requirements of the agency controlling the respective utility or rights-of-way, the more restrictive shall govern.

5. PROGRESS MEETINGS

During the life of the project bi-weekly progress meetings may be held to discuss the project status, potential construction problems, the schedule, and other items that may impact the progress of the work. This meeting shall be attended by the CONTRACTOR, any subcontractors whose work is in progress or will be started in the two weeks following the progress meeting, the ENGINEER and the OWNER. The date, place, and time of the first progress meeting will be set at the preconstruction meeting and subsequent meetings will follow every two (2) weeks.

6. INCIDENTAL CONTRACT ITEMS

All items of work noted on the plans or in the specifications that are not specifically noted in the Bid Form as a pay item shall be considered included in the pay items provided for the construction of the project and shall be constructed at no extra cost to the OWNER.

7. PROJECT COORDINATION WITH OWNER & OTHER CONTRACTORS

The OWNER, utility companies, and commercial or private owners may have construction projects occurring within or adjacent to the project limits during the life of this Contract.

The CONTRACTOR shall coordinate his construction with all such projects that may be ongoing in the vicinity.

Also, where the CONTRACTOR's work affects the operation of YCUA's utilities, the CONTRACTOR shall be responsible for coordinating his work through OHM. Contact the OHM staff assigned to the project and/or Scott Westover at (734) 484-4600. The CONTRACTOR shall give at least 72 hours notice to the OWNER in order to schedule activities such as valve operation, hydrant operation, sewer and structure cleanout, etc. No claim for extra compensation or adjustments in Contract Unit Prices will be allowed on account of delay or failure of others to complete work scheduled.

8. FAIR EMPLOYMENT PRACTICES ACT

The CONTRACTOR agrees that neither he nor his subcontractors will discriminate against any employee or applicant for employment. The CONTRACTOR shall not discriminate with respect to his hire, tenure, terms, conditions or privileges of employment, or any matter directly or indirectly related to employment, because of race, color, religion, national origin or ancestry, nor shall age or sex be a condition of employment except where based upon an occupational qualification. Breach of these covenants may be regarded as a material breach of this Contract.

9. OBSERVATION OF CONSTRUCTION

All construction operations will require full time observation by the OWNER's representative. The CONTRACTOR must notify the ENGINEER at least three (3) working days (72 hours) prior to construction and no work shall be performed without the ENGINEER's presence or awareness. Contact the Construction Staffing Coordinator at (734) 522-6711 to schedule observation.

10. HOURS OF WORK

Work may be performed during the hours of 7:00 a.m. to 7:00 p.m., Monday through Saturday only. Work at other times may be performed only by written permission of the OWNER.

11. TESTING & SAMPLING

The CONTRACTOR shall furnish all samples of materials necessary for tests as determined by the ENGINEER or the Construction Observer. All samples taken for analysis and tests shall be taken in such a manner as to be truly representative of the entire lot under test. The CONTRACTOR shall furnish such assistance and facilities as the ENGINEER may require for collecting, storing or curing samples. Where materials tests are to be performed by the manufacturer, the certificates of approval shall be submitted to the ENGINEER. The cost of all such testing by manufacturers shall be incidental to the project Additional required tests on materials in place shall be made at the expense of the OWNER, unless otherwise stipulated.

The OWNER's Agent shall arrange for and furnish testing services as provided by an acceptable independent laboratory as part of this Contract. These services shall be as follows, in addition to the testing requirements noted in the General Conditions:

All concrete shall be slump and air tested, with cylinders taken (as noted above) in compliance with the current MDOT Standard Specifications for Construction.

There may be areas with uncompacted fill material or organic materials; as a result, all areas within the influence of proposed pavement shall be proof rolled as a minimum, to the satisfaction of the ENGINEER. Some testing may be required.

All aggregate base and pavement shall be tested for compaction. A reputable firm, approved by the ENGINEER shall extensively test all such areas with a nuclear densimeter. In addition, all utility crossings and the areas immediately adjacent to any structures in the pavement shall be specifically tested. Areas which fail shall be compacted further and retested. Failure to pass a second test shall be reason to undercut and refill the area, as directed by the ENGINEER, with careful attention to compaction.

12. STAKING

The ENGINEER will provide construction staking. The staking shall consist of horizontal and/or vertical control staking for sidewalk construction at 50-foot intervals. The CONTRACTOR is responsible for providing a written request for staking to the ENGINEER at least seventy-two (72) hours in advance of starting work. Staking requests should be emailed to the attention of the OHM Survey Department at stakingrequest@ohmadvisors.com. The CONTRACTOR shall carefully preserve all stakes set by the ENGINEER. In the case of willful or careless destruction, the ENGINEER shall provide the restaking and the CONTRACTOR shall be charged with the resulting expense and shall be responsible for delays and errors caused by unnecessary loss or disturbance of the stakes. The expense for restaking will be entered as a deduct on pay estimates and the resulting amount retained by the OWNER for payment of restaking.

13. STATION GRADING

A pay item for Station Grading is included on the Bid Form for this project.

This work shall be done in accordance with methods of roadway earthwork as described in Section 205 of the 2020 Michigan Department of Transportation Standard Specifications for Construction except as herein provided.

The work of Station Grading shall consist of all earthwork required to construct the sidewalk and other pavements shown on the plans and typical cross sections. The work shall include the salvaging and stockpiling of selected materials, disposing of surplus or unsuitable material, furnishing, placing and compacting embankment materials, trimming the earth grade, compacting the subgrade, and maintaining the work in a finished condition until acceptance by the ENGINEER.

All suitable excavated material from the project, including undercut, shall be used as directed by the ENGINEER to construct embankments, backfill muckholes, or flatten slopes as incidental.

All surplus excavated and unsuitable or waste material not incorporated into the project shall become the property of and shall be disposed of by the CONTRACTOR as incidental. The CONTRACTOR shall follow federal, state and local regulations in the disposal of surplus materials.

After the earth grade has been constructed to the required grade, all stones and rocks more than three (3) inches in diameter, appearing on the surface, shall be removed.

The grading shall be so conducted as to avoid removing or loosening any material outside of the required slopes, and any such material which may be removed or loosened shall be replaced and thoroughly compacted to the required cross section.

In addition to the items as specified in the 2020 MDOT Standard Specifications for Construction, the following items are included:

A. Strip topsoil within the grading limits (six (6) inch maximum depth).

B. Clearing of brush and shrubs and the removal of trees less than six (6) inches in diameter.

C. Backfilling behind the curb, and adjacent to drive approaches and drives.

D. Removal or relocation of all signs within the grading limits for which no other Contract item applies.

E. Removal of all other items which are identified as incidental and/or for which no other Contract item applies.

F. Constructing new swales and ditches as directed in the field.

G. Reconstruction/regrading/cleanout of existing drainage courses and ditches.

The CONTRACTOR is advised that he should perform his own earthwork calculations for the road construction work when preparing his bid price.

14. TRAFFIC MAINTENANCE & CONTROL

A. General

During the course of construction, provisions must be made to maintain access for emergency vehicles at all times. Where possible and when directed by the ENGINEER, all streets must be left open to traffic at the end of each working day. Traffic maintenance and control as defined in this section shall be considered as included in the unit bid prices or lump sum bid prices that are given in the Bid Form.

All work for maintaining traffic and control shall be in accordance with Section 812 of the 2020 MDOT Standard Specifications for Construction and the current edition of the Michigan Manual of Uniform Traffic Control Devices, (MMUTCD). The Contractor shall also comply with work zone sign requirements as described in Public Act 315 of 2020.

The CONTRACTOR shall conduct his operations and use of equipment in such a manner that traffic will be maintained throughout the entire length of the project. When conditions are such as to warrant variations from this requirement, the procedure to be followed shall be approved by the ENGINEER prior to such procedure being put into effect.

The CONTRACTOR shall furnish, erect and maintain all barricades, signs and lights as required according to the current edition of the MMUTCD. Flagmen shall also be provided by the CONTRACTOR as necessary to protect the vehicular and pedestrian traffic and the

work within the work zone areas. CONTRACTOR shall be responsible for notifying concerned parties such as Police, Fire, and school officials if a road closure and/or detour will be in effect. The CONTRACTOR shall notify the same parties when the road has been reopened.

Once work on a particular utility is begun, the CONTRACTOR must continue his work to completion. The OWNER will not permit random movements of work operations among the project area that tend to confuse traffic patterns.

B. Provision for Local Traffic

During the progress of the work, the CONTRACTOR shall accommodate both local vehicular and pedestrian traffic along the roads.

Access to all residences and businesses shall be maintained except as noted on the plans or as directed by the ENGINEER.

The CONTRACTOR's truck and equipment operations on public streets shall be governed by all local traffic ordinances and regulations of the Fire and Police Departments, the OWNER, and Michigan Department of Transportation.

C. Existing Warning and Regulatory Signs

Wherever possible, all existing signs on this project are to be preserved and maintained as incidental to the project.

Where it is not possible to preserve existing traffic control signs and street name signs, they shall be removed, temporarily reset and maintained by the CONTRACTOR. Upon completion of the project, the CONTRACTOR will reset traffic control signs and street name signs in the proper position.

In cases where new signs are called for, they shall be placed in accordance with the requirements outlined elsewhere in the Contract Documents.

Any new or existing signs damaged by the CONTRACTOR shall be replaced in kind by him at no additional cost to the OWNER.

D. Lane Closures and Detours

Any lane closures or detours shall be approved by the OWNER and the appropriate governing agency, and shall meet their specifications and standards as well as those of the MMUTCD. Where there are conflicts, the more restrictive requirement shall apply. If any type of closure is to occur during twilight or darkness, proper lighting will be required.

E. Construction Signs and Barricades

Warning signs and barricade configurations shall meet the requirements of the Washtenaw County Road Commission, the OWNER, and the Michigan Department of Transportation.

The CONTRACTOR shall not begin any operation on the project until all required signs and barricades have been set.

All signs to be used during twilight or darkness shall be reflectorized, in good condition, with two continuous flashing lights.

The construction site shall at all times be maintained and left in a clean, neat, and safe condition, including any construction signing.

After working hours, signs that are not appropriate shall be covered and/or removed so that motorists will not be confused. The CONTRACTOR shall also remove and replace or cover (where practical) existing traffic signs that may conflict with the proposed construction.

15. LOAD RESTRICTIONS ON LOCAL STREETS

The CONTRACTOR shall not operate heavy trucks or equipment on any side street within the project area without permission from ENGINEER, the OWNER or appropriate governing agency.

16. UTILITIES

The location of public or private utilities shown on the plans is in accordance with mapping provided by the utility owners. No guarantee is given that the locations are absolutely accurate or that utilities other than those shown are not present.

For protection of underground utilities, the CONTRACTOR shall contact “Miss Dig” at 1-800-482-7171 a minimum of three (3) working days prior to excavating. This does not relieve the CONTRACTOR of the responsibility of notifying utility owners who may not be part of the “Miss Dig” alert system.

During the course of the construction, the CONTRACTOR will encounter both overhead and underground utilities.

A handhole at approximately Sta 4+50 and a guy wire at approximately Sta 18+50 may need to be relocated for the proposed sidewalk construction.

The electric, gas and telephone public utilities have been notified of existing underground utilities and utility poles that are within the construction limits. Those utilities in conflict with the proposed construction will be relocated by the utility OWNER. The CONTRACTOR shall cooperate with utility company forces to minimize project delays.

In the event that utilities are encountered which require relocation, it shall be the CONTRACTOR’s responsibility to arrange for and schedule the relocation of the affected utilities with the owners.

No additional compensation will be paid for delays due to the encountering of existing utilities that are or are not shown on the plans.

Work stoppages by employees of utility companies or any occurrence which results in a delay in utility relocations on this project may be considered as a basis for a claim for an extension of the time of completion, but will not be considered as a basis for a claim for extra compensation or an adjustment in Contract Unit Prices. The amount of any such time extension will be based upon the amount of delay actually experienced as a result of the utility relocation delay.

17. EMERGENCY REPAIR

When the CONTRACTOR is not actively performing work on a particular construction site, situations of an emergency nature may arise as a result of uncompleted work. Such situations may affect, directly or indirectly, public and/or private property, and may ultimately affect the health, safety, and welfare of individuals or the general public. The intent of this article is to provide a procedure to eliminate these problems as they occur. While these problem situations can and do readily develop as emergencies, the ENGINEER shall direct field-related operations and require immediate efforts by the CONTRACTOR to remedy the deficiency in a method of his choosing because of his expertise in the field, time being of the essence. The correction of the "emergency" which may arise when no activity exists on the construction site shall be handled in the following manner:

A. The ENGINEER shall observe the site, take any necessary photographs and/or prepare any necessary sketches of conditions at the site to determine that the situation constitutes an emergency.

B. The ENGINEER then has three alternative sources of manpower and equipment to be selected to remedy the emergency situation in the following order:

    1. The CONTRACTOR under Contract with the OWNER to perform all work on the site location in question;

    2. The OWNER's Water and Sewer.

    3. An independent CONTRACTOR designated by the OWNER.

Since the nature and extent of most unfinished work on a particular construction site is well known by both the ENGINEER's authorized agent and the CONTRACTOR at the time of declaring such an "emergency situation" as set forth herein before; the CONTRACTOR under Contract to the OWNER for the particular project would be the first party notified and would be expected to respond immediately with necessary manpower and equipment to remedy the problem.

If a reasonable time to respond to the emergency notification is not evident, in the best judgment of the ENGINEER, then the CONTRACTOR shall be judged to have waived his rights to physically correct the problem, but not his obligations to pay for such a physical correction or damages resulting there from. The ENGINEER shall then contact the OWNER's Water and Sewer for their assistance in correcting the "emergency situation". Where existing commitments by the Water and Sewer prohibit their immediate response to the request by the ENGINEER, the ENGINEER shall finally direct that corrective measures be performed by the independent contractor previously contacted by the OWNER to perform such emergency work when so directed.

Since the cost for all remedial work undertaken by the CONTRACTOR on this project shall be borne by the CONTRACTOR and it is necessary to engage the services of the Water and Sewer or an independent contractor, then all costs incurred would be deducted from monies due and payable to the CONTRACTOR on the particular project as set forth on any ensuing regular job estimates.

Typical costs which will be deducted from Contract monies due would be:

A. Payroll wages

B. Material bills

C. Equipment rental (Detroit area rates) and moving costs

D. 15% profit and overhead for independent contractor

E. 10% administrative costs

F. Observation costs

18. USE OF WATER

CONTRACTOR shall not make a connection to any fire hydrant without first obtaining the necessary permit (meter). The CONTRACTOR shall be charged for all water used.

19. ASPHALT AND PAVEMENT CONSTRUCTION

Asphalt and concrete pavements shall be constructed in accordance with the 2020 MDOT Standard Specifications for Construction unless otherwise indicated in the Supplemental Specifications, Appendix, plan notes, or plan details.

20. MAIL/NEWSPAPER BOXES

The CONTRACTOR shall remove mailboxes that may conflict with the new construction and replace to their original location in accordance with requirements of the U.S. Post Office. Any mailbox or post not indicated on the plans for removal or replacement that is damaged by the CONTRACTOR's operations shall be replaced in kind by the CONTRACTOR at no additional charge to the OWNER. If temporary street closures or construction activities occur which prohibit delivery of mail by the postal department, then alternate provisions for mail delivery shall be provided by the CONTRACTOR and approved by the OWNER, also at no additional charge to the OWNER.

21. AUDIO-VIDEO RECORDINGS

The CONTRACTOR shall conduct an Audio Video route survey in accordance with the specifications. The extents of this survey shall include the full right of way for the entire project area. The audio video survey shall include detailed descriptions of conditions and locations of all existing pavements, drives, cracks in driveway, mailboxes, locations with poor drainage (e.g. standing water), trees, appurtenances, and other structures within 30 ft of the property line.

Appendix A:

Soil Boring Logs

Legend

Hand augered soil borings excavated by G2 Consulting Group, LLC on June 21, 2023.

Soil Boring Location Plan		
Non-Motorized Pathway Ridge Road - E. Clark Street to Holmes Road Ypsilanti Township, Washtenaw County, Michgian		
G2 CONSULTING GROUP	Project No. 233008	
	Drawn by: MGD	
	Date: 6/21/23	Plate No. 1
	Scale: NTS	

Project Name: Non-Motorized Pathway

Project Location: Ridge Road - E. Clark Street to Holmes Road
Ypsilanti Township, Washtenaw County, Michigan

G2 Project No. 233008

Latitude: 42.25963754° Longitude: -83.5540404°

Soil Boring No. B-01

CONSULTING GROUP

SUBSURFACE PROFILE				SOIL SAMPLE DATA				
ELEV. (ft)	PRO-FILE	GROUND SURFACE ELEVATION: 725.0 ft ±	DEPTH (ft)	SAMPLE TYPE/NO.	DCP BLOWS/ 1.75-INCHES	MOISTURE CONTENT (%)	DRY DENSITY (PCF)	UNCOF. COMP. ST. (PSF)
		Topsoil: Dark Brown Sand with trace silt and gravel (5 inches)	0.4					
		Fill: Loose Brown Sand with trace silt and gravel; occasional roots		BS-01	8			
			4.0	BS-02	9			
720.0		End of Boring @ 4 ft	5					

Total Depth: 4 ft
Drilling Date: June 21, 2023
Inspector: J. Hayball, PE
Contractor: G2 Consulting Group, LLC
Driller: J. Hayball, PE

Water Level Observation:
Dry during and upon completion

Excavation Backfilling Procedure:
Excavated soil

Drilling Method:
3-inch inside diameter hand-auger

Figure No. 1

PAVEMENT CORE DCP 233008.GPJ 20140820 G2 CONSULTING DATA TEMPLATE.GDT 7/12/23

Project Name: Non-Motorized Pathway

Project Location: Ridge Road - E. Clark Street to Holmes Road
Ypsilanti Township, Washtenaw County, Michigan

G2 Project No. 233008

Latitude: 42.25906078° Longitude: -83.55386647°

Soil Boring No. B-02

CONSULTING GROUP

SUBSURFACE PROFILE				SOIL SAMPLE DATA				
ELEV. (ft)	PRO-FILE	GROUND SURFACE ELEVATION: 724.0 ft ±	DEPTH (ft)	SAMPLE TYPE/NO.	DCP BLOWS/ 1.75-INCHES	MOISTURE CONTENT (%)	DRY DENSITY (PCF)	UNCOF. COMP. ST. (PSF)
		Bituminous Concrete (5 inches)						
		0.4						
		Aggregate Base: Gray Gravelly Sand with trace silt (10 inches)						
		1.3		BS-01	8			
		Loose Brown Sand with trace silt and gravel						
		4.0		BS-02	6			
		End of Boring @ 4 ft						
719.0			5					

Total Depth: 4 ft
Drilling Date: June 21, 2023
Inspector: J. Hayball, PE
Contractor: G2 Consulting Group, LLC
Driller: J. Hayball, PE

Water Level Observation:
Dry during and upon completion

Excavation Backfilling Procedure:
Excavated soil; asphalt patch

Drilling Method:
4-inch inside diameter diamond tipped core barrel;
3 inch inside diameter hand-aguer

Figure No. 2

PAVEMENT CORE DCP 233008.GPJ 20140820 G2 CONSULTING DATA TEMPLATE.GDT 7/12/23

Project Name: Non-Motorized Pathway

Project Location: Ridge Road - E. Clark Street to Holmes Road
Ypsilanti Township, Washtenaw County, Michigan

G2 Project No. 233008

Latitude: 42.25768571° Longitude: -83.55402072°

Soil Boring No. B-03

CONSULTING GROUP

SUBSURFACE PROFILE				SOIL SAMPLE DATA				
ELEV. (ft)	PRO-FILE	GROUND SURFACE ELEVATION: 719.5 ft ±	DEPTH (ft)	SAMPLE TYPE/NO.	DCP BLOWS/ 1.75-INCHES	MOISTURE CONTENT (%)	DRY DENSITY (PCF)	UNCOF. COMP. ST. (PSF)
		Topsoil: Dark Brown Clayey Sand with trace gravel (8 inches)						
			0.7					
		Fill: Loose Dark Brown Sand with trace clay and gravel; asphalt debris; occasional roots						
			1.9	BS-01	6			
		Fill: Medium Compact Brown Clayey Sand with trace silt and gravel						
			4.0	BS-02	11			
		End of Boring @ 4 ft						
714.5			5					

Total Depth: 4 ft
Drilling Date: June 21, 2023
Inspector: J. Hayball, PE
Contractor: G2 Consulting Group, LLC
Driller: J. Hayball, PE

Water Level Observation:
Dry during and upon completion

Excavation Backfilling Procedure:
Excavated soil

Drilling Method:
3-inch inside diameter hand-auger

Figure No. 3

PAVEMENT CORE DCP 233008.GPJ 20140820 G2 CONSULTING DATA TEMPLATE.GDT 7/12/23

Project Name: Non-Motorized Pathway

Project Location: Ridge Road - E. Clark Street to Holmes Road
Ypsilanti Township, Washtenaw County, Michigan

G2 Project No. 233008

Latitude: 42.25612433° Longitude: -83.55401565°

Soil Boring No. B-04

CONSULTING GROUP

SUBSURFACE PROFILE				SOIL SAMPLE DATA				
ELEV. (ft)	PRO-FILE	GROUND SURFACE ELEVATION: 722.5 ft ±	DEPTH (ft)	SAMPLE TYPE/NO.	DCP BLOWS/ 1.75-INCHES	MOISTURE CONTENT (%)	DRY DENSITY (PCF)	UNCOF. COMP. ST. (PSF)
		Topsoil: Dark Brown Clayey Sand with trace gravel (6 inches)	0.5					
		Fill: Loose Dark Brown Sand with trace clay and gravel; asphalt debris; occasional roots	2.8	BS-01	7			
		Loose Brown Clayey Sand with trace gravel	4.0	BS-02	9			
		End of Boring @ 4 ft						
717.5			5					

Total Depth: 4 ft
Drilling Date: June 21, 2023
Inspector: J. Hayball, PE
Contractor: G2 Consulting Group, LLC
Driller: J. Hayball, PE

Water Level Observation:
Dry during and upon completion

Excavation Backfilling Procedure:
Excavated soil

Drilling Method:
3-inch inside diameter hand-auger

Figure No. 4

PAVEMENT CORE DCP 233008.GPJ 20140820 G2 CONSULTING DATA TEMPLATE.GDT 7/12/23

Project Name: Non-Motorized Pathway

Project Location: Ridge Road - E. Clark Street to Holmes Road
Ypsilanti Township, Washtenaw County, Michigan

G2 Project No. 233008

Latitude: 42.25501408° Longitude: -83.55401221°

Soil Boring No. B-05

CONSULTING GROUP

SUBSURFACE PROFILE				SOIL SAMPLE DATA				
ELEV. (ft)	PRO-FILE	GROUND SURFACE ELEVATION: 723.5 ft ±	DEPTH (ft)	SAMPLE TYPE/NO.	DCP BLOWS/ 1.75-INCHES	MOISTURE CONTENT (%)	DRY DENSITY (PCF)	UNCOF. COMP. ST. (PSF)
		Topsoil: Dark Brown Sand with trace gravel (4 inches)	0.3					
		Fill: Loose Dark Brown Sand with trace clay and gravel; wood fragments; glass fragments; occasional roots	2.0	BS-01	9			
		Fill: Loose Brown Clayey Sand with trace gravel	4.0	BS-02	9			
		End of Boring @ 4 ft						
718.5			5					

Total Depth: 4 ft
Drilling Date: June 21, 2023
Inspector: J. Hayball, PE
Contractor: G2 Consulting Group, LLC
Driller: J. Hayball, PE

Water Level Observation:
Dry during and upon completion

Excavation Backfilling Procedure:
Excavated soil

Drilling Method:
3-inch inside diameter hand-auger

Figure No. 5

PAVEMENT CORE DCP 233008.GPJ 20140820 G2 CONSULTING DATA TEMPLATE.GDT 7/12/23

CHARTER TOWNSHIP OF YPSILANTI
WASHTENAW COUNTY, MICHIGAN

RIDGE ROAD SIDEWALK IMPROVEMENTS

INDEX OF SHEETS	
SHEET NO.	DESCRIPTION
1	COVER SHEET
2	MISCELLANEOUS DETAILS
3	GENERAL NOTES
4	LEGEND
5–9	CONSTRUCTION PLANS
10	SOIL EROSION AND SEDIMENTATION CONTROL
11–17	YPSILANTI TOWNSHIP AND YCUA STANDARD DETAIL SHEETS

M.D.O.T. STANDARD PLANS	
TITLE	PLAN NO.
DRAINAGE STRUCTURES	R–1–G
CURB RAMP AND DETECTABLE WARNING DETAILS	R–28–J
DRIVEWAY OPENINGS & APPROACHES AND CONCRETE SIDEWALKS	R–29–I
CONCRETE CURB AND CONCRETE CURB & GUTTER	R–30–G
*GRANULAR BLANKET, UNDERDRAINS, OUTLET ENDINGS FOR UNDERDRAINS, AND SEWER BULKHEADS	*R–80–F
PRECAST CONCRETE END SECTIONS FOR PIPE CULVERT	R–86–F
*SEEDING AND TREE PLANTING	*R–100–I
GRADING CROSS–SECTIONS	R–105–D

*MDOT SPECIAL DETAIL

PROJECT AREA

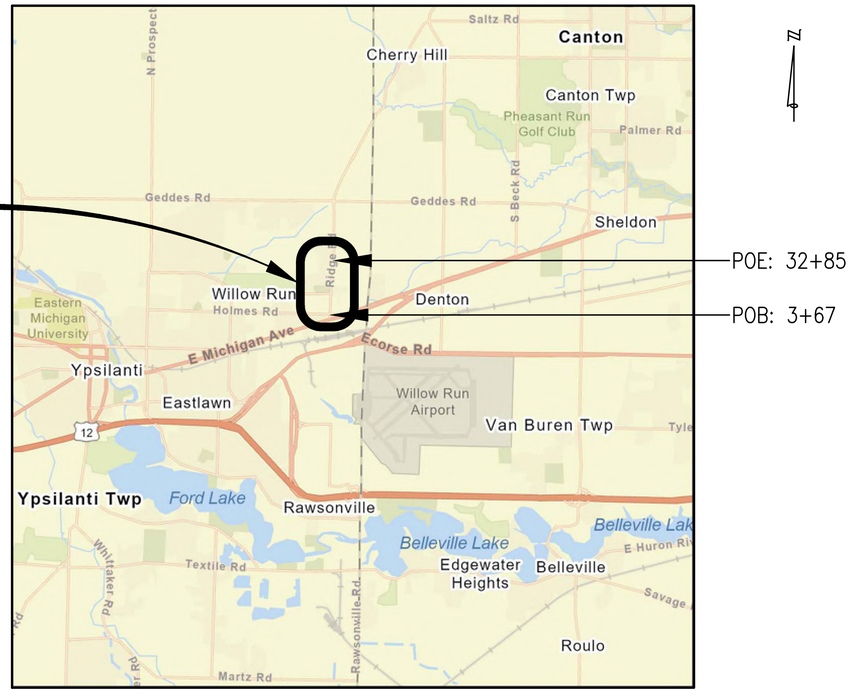

LOCATION MAP
N.T.S.

YPSILANTI TOWNSHIP BOARD MEMBERS

BRENDA STUMBO
•SUPERVISOR•

HEATHER JARRELL ROE
•CLERK•

STAN ELDRIDGE
•TREASURER•

RYAN HUNTER

JOHN P. NEWMAN II

GLORIA PETERSON

DEBBIE SWANSON
•TRUSTEES•

GENERAL PROVISIONS

THE IMPROVEMENTS COVERED BY THESE PLANS SHALL BE DONE IN ACCORDANCE WITH THE PROPOSAL AND ACCOMPANYING SPECIFICATIONS FOR THIS PROJECT INCLUDING THE 2020 MICHIGAN DEPARTMENT OF TRANSPORTATION STANDARD SPECIFICATIONS FOR CONSTRUCTION, 2011 MICHIGAN MANUAL OF UNIFORM TRAFFIC CONTROL DEVICES, AND THE MICHIGAN DEPARTMENT OF TRANSPORTATION LOCAL AGENCY PROGRAMS GUIDELINES FOR GEOMETRICS DATED 7–24–2017.

THE LOCATION OF ALL PUBLIC UTILITIES SHOWN ON THESE PLANS IS TAKEN FROM THE BEST AVAILABLE DATA. THE CITY OF YPSILANTI WILL NOT BE RESPONSIBLE FOR ANY OMISSION OR VARIATION FROM THE LOCATIONS SHOWN. PURSUANT TO ACTS 173 & 174 OF THE P.A. OF 2013, AS A CONDITION OF THIS CONTRACT, NOTICE SHALL BE GIVEN TO MISS DIG PRIOR TO UNDERGROUND WORK TO BE PERFORMED IN ACCORDANCE WITH THIS CONTRACT, PHONE (800) 482–7171 (OR 811). UTILITY SERVICE CONNECTIONS ARE NOT SHOWN ON THE PLANS AND ARE NOT THE RESPONSIBILITY OF THE CITY OF YPSILANTI.

THE ELEVATIONS SHOWN ON THESE PLANS ARE BASED ON NAVD 1988 VERTICAL DATUM.

APPLICATION DATE	PERMITS	APPROVAL DATE
8/2/2023	WASHTENAW COUNTY ROAD COMMISSION ROW	
	YPSILANTI TOWNSHIP SESC	

CONTRACT FOR:
CONSTRUCTION AND REHABILITATION OF APPROXIMATELY 3,000 FEET OF 5–FOOT–WIDE SIDEWALK, A MID–BLOCK CROSSING, GRADING, BUS STOP IMPROVEMENTS, AND ASSOCIATED RESTORATION.

OHM
Advancing Communities
34000 Plymouth Road | Livonia, MI 48150
P (734) 522-6711 | F (734) 522-6427

PREPARED UNDER THE SUPERVISION OF:

6201053585
Registration No.

MATTHEW D. PARKS

August 22, 2023
Date

REVISIONS	
PROJECT NO.	SHEET NO.
0098–23–0020	1 OF 10

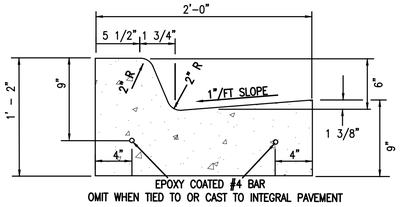

MDOT TYPE F4
CONCRETE CURB AND GUTTER DETAIL
NTS

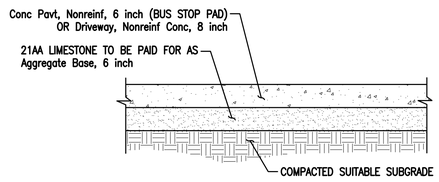

CONC PAVEMENT CROSS-SECTION
NTS

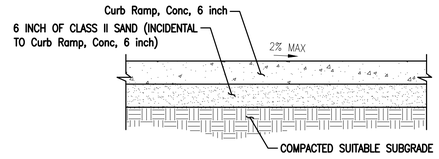

SIDEWALK RAMP CROSS-SECTION
NTS

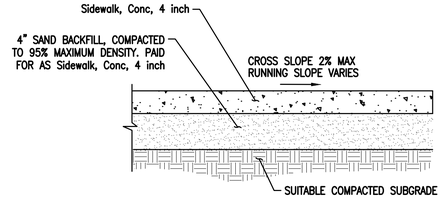

4-INCH CONCRETE SIDEWALK CROSS-SECTION

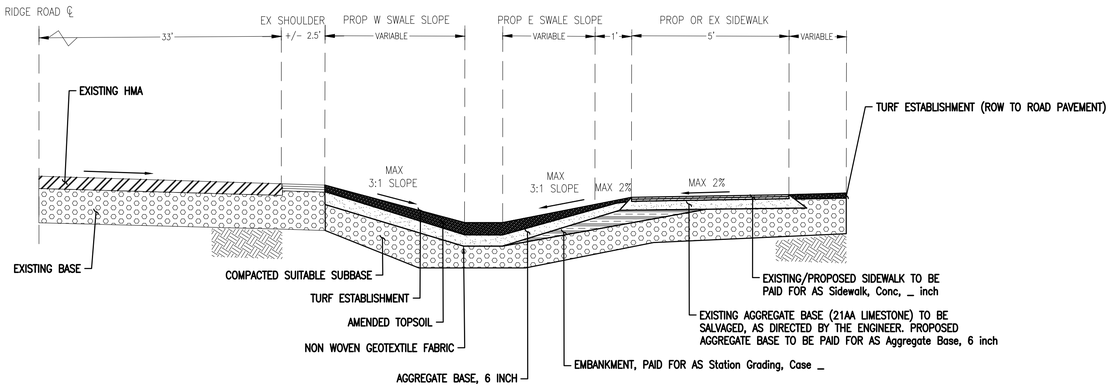

PROPOSED TYPICAL CROSS-SECTION FOR DITCH RE-GRADE
NTS

MATCH EXISTING GRADES OR FOLLOW THIS TYPICAL
DITCH RE-GRADING TO BE PAID FOR AS Station Grading, Case _

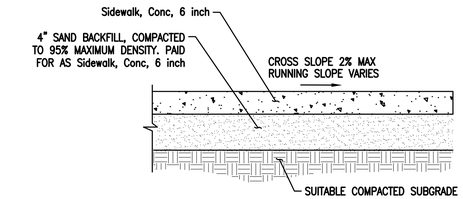

6-INCH CONCRETE SIDEWALK CROSS-SECTION
NOTE: TO BE USED THROUGH DRIVE APPROACHES ONLY

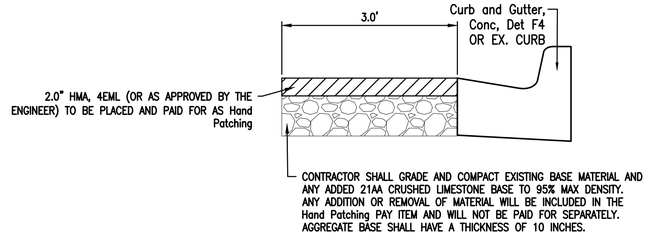

PROPOSED HMA REPAIR DETAIL ADJACENT TO CURB REMOVAL AND REPLACEMENT

HMA APPLICATION ESTIMATE

MIX TYPE	ITEM DESCRIPTION	RATE OF APPL. LB/SYD	EST THICKNESS (INCHES)	PERFORMANCE GRADE	LOCATION/NOTES
13A	HMA, 4EML	330	3"	58-22	APPLY IN ONE (1) 2" LIFT FOR A TOTAL THICKNESS OF 2"
13A	Hand Patching	VARIES	VARIES	58-22	AS SHOWN ON THE PLANS OR AS DIRECTED BY ENGINEER

OHM
ARCHITECTS ENGINEERS PLANNERS
OHM-ADVISORS.COM

ISSUED FOR:	DESCRIPTION	DATE
FOR BID	—	08/22/2023

PROJECT NUMBER	PM	DISCIPLINE LEAD	CLIENT PROJ. NO
0098-23-0020	MDP	SLM	0098-23-0020

CHARTER TOWNSHIP OF YPSILANTI
RIDGE ROAD SIDEWALK IMPROVEMENTS

MISCELLANEOUS DETAILS

COPYRIGHT 2023 OHM ADVISORS. ALL DRAWINGS AND WRITTEN MATERIALS APPEARING HEREIN CONSTITUTE THE ORIGINAL AND UNPUBLISHED WORK OF OHM ADVISORS AND THE SAME MAY NOT BE DUPLICATED, DISTRIBUTED, OR DISCLOSED WITHOUT PRIOR WRITTEN CONSENT OF OHM ADVISORS

DRAWING PATH: \\ohmshfs\Corporate\Projects\0000_0100\0098230020_ridge_rd_sidewalk\Drawings\Civil\Details\230020DET.dwg Aug 08, 2023 - 9:18am

GENERAL NOTES

THIS PROJECT SHALL BE CONSTRUCTED IN ACCORDANCE WITH THE 2020 MICHIGAN DEPARTMENT OF TRANSPORTATION STANDARD SPECIFICATIONS FOR HIGHWAY CONSTRUCTION EXCEPT AS NOTED HEREIN AND IN THE CONTRACT DOCUMENTS.

IN CONFORMANCE WITH PUBLIC ACT 53, THE CONTRACTOR AND/OR SUBCONTRACTORS SHALL NOTIFY MISS DIG (800-482-7171 or 811), THE YPSILANTI COMMUNITY UTILITY AUTHORITY (734-484-4600), AND THE FIRE DEPARTMENT (734-544-4107) A MINIMUM OF 3 WORKING DAYS PRIOR TO THE BEGINNING OF CONSTRUCTION.

YPSILANTI TOWNSHIP PERMITS CONSTRUCTION BETWEEN THE HOURS OF 7:00 AM AND 7:00 PM, MONDAY THROUGH SATURDAY, UNLESS OTHERWISE AUTHORIZED BY THE TOWNSHIP. SHOULD AN EMERGENCY ARISE WHICH WOULD REQUIRE WORKING BEYOND THE HOURS MENTIONED, THE CONTRACTOR SHALL CONTACT THE RECREATION SERVICES MANAGER, JOHN HINES (PH: 734-544-3817) FOR APPROVAL FOR WORK BEYOND THE PERMITTED HOURS.

LIMITATIONS ON PRIVATE WORK: DURING CONSTRUCTION OPERATIONS, THE CONTRACTOR SHALL NOT PERFORM WORK BY PRIVATE AGREEMENT WITH PROPERTY OWNERS ADJACENT TO THE PROJECT, UNLESS GIVEN WRITTEN CONSENT OF THE ENGINEER.

THE CONTRACTOR SHALL CONDUCT OPERATIONS IN SUCH A MANNER TO COMPLY WITH ALL FEDERAL, STATE, AND CITY CODES FOR NOISE LEVELS, VIBRATIONS, OR ANY OTHER RESTRICTIONS WHILE REMOVING PAVEMENT OR FOR ANY OTHER CONSTRUCTION OPERATIONS WITHIN THIS CONTRACT TO BE INCLUDED IN THE RESPECTIVE ITEM OF WORK.

WHEN THE CONTRACTOR FAILS TO PERFORM THE DUTIES AS CALLED FOR ON THESE PLANS AND IN THE CONTRACT, THE ENGINEER MAY REQUIRE TOWNSHIP FORCES TO PERFORM WORK, WITH OR WITHOUT NOTIFICATION TO THE CONTRACTOR OR THE SURETY. THE CONTRACTOR WILL BE CHARGED EQUIPMENT RENTAL RATES AS ESTABLISHED BY THE TOWNSHIP. TIME CHARGED TO THE CONTRACTOR SHALL BE FROM THE TIME THAT THE WORKFORCE AND EQUIPMENT LEAVE THE TOWNSHIP YARD TO THE TIME THAT THEY RETURN TO THE TOWNSHIP YARD.

ALL AREAS DISTURBED OUTSIDE OF THE GRADING LIMITS BY THE CONTRACTOR AND/OR HIS SUBCONTRACTOR SHALL BE RESTORED AS SPECIFIED OR DIRECTED BY THE ENGINEER. NO ADDITIONAL PAYMENT OR COMPENSATION WILL BE ALLOWED FOR THIS ACTIVITY. THE CONTRACTOR SHALL BE RESPONSIBLE FOR ANY DAMAGE TO THE PROPERTY BEYOND THE AREAS OF WORK, INCLUDING EXISTING FENCING, LAWN, TREES, SPRINKLER SYSTEMS, AND SHRUBBERY.

THE CONTRACTOR SHALL RELOCATE DISTURBED ORNAMENTAL OBJECTS AS DIRECTED BY THE ENGINEER. NO ADDITIONAL PAYMENT OR COMPENSATION WILL BE ALLOWED FOR THIS ACTIVITY.

DISTURBED AREAS SHALL BE RESTORED IN ACCORDANCE WITH THE PLANS AND SPECIFICATIONS AND AS DIRECTED BY THE ENGINEER.

ANY PERMANENT SIGNS, NOT PROPOSED TO BE REMOVED AND REPLACED, REQUIRING RELOCATION DUE TO THE CONTRACTOR'S OPERATIONS SHALL BE SALVAGED AND RESET BY THE CONTRACTOR AT LOCATIONS DESIGNATED BY THE ENGINEER. SIGNS AND POST DAMAGED DURING THE REMOVAL AND STORAGE OPERATION SHALL BE REPLACED WITH NEW SIGNS AND POST BY THE CONTRACTOR AT THEIR SOLE EXPENSE.

THE CONTRACTOR SHALL NOT PARK ANY VEHICLES OR STORE ANY EQUIPMENT AND MATERIALS ON PRIVATE PROPERTY UNLESS AGREED TO UPON BETWEEN THE PROPERTY OWNER, CONTRACTOR, AND TOWNSHIP. ALL WORK SHALL BE CONFINED TO THE CONSTRUCTION LIMITS SHOWN ON THE PLANS UNLESS AUTHORIZED IN ADVANCE BY THE ENGINEER.

CONSTRUCTION STAGING

ALL TRAFFIC CONTROL DEVICES SHOULD BE IN ACCORDANCE WITH THE 2011 MMUTCD, AS AMENDED AND AS PERMITTED BY THE WASHTENAW COUNTY ROAD COMMISSION.

THE CONTRACTOR SHALL BE RESPONSIBLE TO MAINTAIN ALL TRAFFIC AND PEDESTRIAN CONTROL DEVICES WITHIN THE PROJECT LIMITS. ANY TRAFFIC CONTROL DEVICES DAMAGED DUE TO THE CONTRACTOR'S OPERATION SHALL BE REPAIRED OR REPLACED BY THE CONTRACTOR AT HIS SOLE EXPENSE. THE CONTRACTOR WILL BE CHARGED FOR ANY DAMAGED TRAFFIC CONTROL DEVICES DUE TO THE CONTRACTOR'S OPERATION, IF THEY ARE REPAIRED OR REPLACED BY THE CITY.

AS DIRECTED BY THE ENGINEER, THE CONTRACTOR SHALL PROVIDE AND MAINTAIN ANY ADDITIONAL SIGNS, BARRICADES AND LIGHTS WITHIN THE PROJECT TO PROTECT THE TRAFFIC AND WORK AREA.

THE CONTRACTOR SHALL BE RESPONSIBLE FOR COVERING AND UNCOVERING ALL CONSTRUCTION SIGNS AS NEEDED FOR THE PROPER MAINTENANCE OF TRAFFIC IN THE CONSTRUCTION AREA.

TRAFFIC CHANNELING DEVICES (PLASTIC BARRELS) FURNISHED BY THE CONTRACTOR FOR WORK PROTECTION SHALL BE COATED WITH REFLECTORIZED MATERIAL AND EQUIPPED WITH STEADY BURNING LIGHTS (TYPE "C") AT SPACING BASED ON POSTED SPEED LIMIT AND PER THE 2011 MMUTCD AS AMENDED.

SIGNAGE SHALL BE ON SITE NO SOONER THAN 1 WEEK PRIOR TO START OF SAW CUTTING OPERATION AND REMOVED WITHIN 48 HOURS OF HMA SURFACE CONSTRUCTION.

DUST CONTROL

THE CONTRACTOR SHALL BE RESPONSIBLE FOR DUST CONTROL ON THIS PROJECT. KEEPING DUST TO A MINIMUM IS HIGH PRIORITY AND WILL BE EXPECTED TO BE MAINTAINED ON A REGULAR BASIS. DUST CONTROL WILL BE CONSIDERED AS INCLUDED AS PART OF THE CONTRACT UNIT PRICE FOR THE SOIL EROSION CONTROL MEASURES.

SAWCUTTING

THE CONTRACTOR SHALL SAWCUT THE EXISTING CONCRETE AND/OR HMA PAVEMENT AND DRIVEWAYS TO THE LIMITS OF PROPOSED CONSTRUCTION, TO MAKE A NEAT AND SMOOTH CONNECTION TO THE EXISTING PAVEMENT OR DRIVEWAY AS REQUIRED AND DIRECTED. THIS WORK WILL NOT BE PAID FOR SEPARATELY, BUT WILL BE CONSIDERED INCLUDED IN THE CONTRACT UNIT PRICE BID FOR OTHER REMOVAL ITEMS.

FLAGGING OPERATIONS

THE CONTRACTOR AND ANY SUBCONTRACTORS WHO WILL BE USING A FLAGGING OPERATION FOR THIS PROJECT SHALL BE REQUIRED TO PROVIDE SATISFACTORY DOCUMENTATION PROVING THAT THEY HAVE MET THE MINIMUM REQUIREMENTS SET FORTH IN SECTION 812 OF THE 2020 MDOT STANDARD SPECIFICATIONS FOR CONSTRUCTION. FAILURE TO PROVIDE DOCUMENTATION WILL RESULT IN THE ROAD AUTHORITY WITHHOLDING PAYMENT FOR FLAGGING OPERATIONS. FLAGGING OPERATIONS WILL BE CONSIDERED INCIDENTAL TO TRAFFIC MAINTENANCE AND CONTROL.

LAWN SPRINKLER SYSTEMS AND LANDSCAPING

OWNERS OF EXISTING LAWN SPRINKLER SYSTEMS AND/OR LANDSCAPING SHALL BE NOTIFIED (IN WRITING WITH A COPY SENT TO THE ENGINEER) BY THE CONTRACTOR TWO WEEKS IN ADVANCE OF ANY WORK TO BE DONE THAT WILL AFFECT THOSE SYSTEMS AND/OR LANDSCAPING. IF THE PROPERTY OWNER FAILS TO MARK AND/OR RELOCATE THE LAWN SPRINKLER SYSTEM PRIOR TO THE CONTRACTOR BEGINNING WORK, AND IF THE CONTRACTOR CUTS THE SYSTEM DURING CONSTRUCTION, THE CONTRACTOR SHALL CAP THE SYSTEM PIPE AND WITNESS THE LOCATION OF THE CAP WITH A WOODEN STAKE FOR THE RESIDENTS' USE. THE CONTRACTOR SHALL PLACE THE SALVAGED SPRINKLER HEADS ON THE PROPERTY OWNERS PROPERTY. IF THE PROPERTY OWNER FAILS TO RELOCATE THE LANDSCAPING PRIOR TO THE CONTRACTOR BEGINNING WORK, THE CONTRACTOR SHALL CAREFULLY SALVAGE THE LANDSCAPING ITEMS AND STOCKPILE THEM ON THE PROPERTY OWNERS PROPERTY FOR THE PROPERTY OWNER. ANY OTHER MODIFICATION TO THE LAWN SPRINKLER SYSTEMS AND/OR LANDSCAPING, IS THE RESPONSIBILITY OF THE OWNER AND IS NOT PART OF THIS CONTRACT. THIS WORK AND ALL REQUIRED COMMUNICATION AND COORDINATION WITH THE RESIDENT IS CONSIDERED INCIDENTAL.

PAVING AND CONCRETE WORK

THE CONSTRUCTION OF ALL LONGITUDINAL JOINTS IN THE HMA LEVELING AND WEARING COURSES SHALL BE CONSTRUCTED WITH THE USE OF A JOINT MATCHING SHOE.

CONSTRUCTION JOINTS AT EXISTING SURFACES SHALL BE BUTT JOINTS. FEATHERED JOINTS WILL NOT BE ALLOWED.

THE CONCRETE MIX SHALL BE GRADE P1 IN ACCORDANCE WITH SECTION 601 OF THE 2020 MDOT STANDARD SPECS FOR CONSTRUCTION.

HAND FINISHING OF CONCRETE POURS TO BE STRUCK OFF AND CONSOLIDATED BY HAND METHODS WILL BE PERMITTED ON VARIABLE WIDTH LANES AND LANES FORMED BY FLEXIBLE FORMS FOR SHORT RADIUS CURVES AS DIRECTED BY THE ENGINEER.

ALL DRIVEWAY OPENINGS SHALL CONFORM TO MDOT STANDARD PLAN R-29-I, DETAIL L OR DETAIL M, EXCEPT THE LAYOUT SHALL BE AS SHOWN ON THE PLANS OR AS DIRECTED BY THE ENGINEER.

AT LOCATIONS WHERE BARRIER CURBS TERMINATE, THE HEIGHT OF THE BACK OF CURB SHALL TRANSITION FROM FULL HEIGHT TO A HEIGHT OF ONE (1) INCH OVER 10 (10) FEET OR AS DIRECTED BY THE ENGINEER.

ANY RANDOM, IRREGULARLY CRACKED NEW CONCRETE CURB & GUTTER THAT OCCURS BEFORE THE PAVEMENT IS OPENED TO TRAFFIC SHALL BE REMOVED AND REPLACED AT THE SOLE EXPENSE OF THE CONTRACTOR PRIOR TO OPENING THE PAVEMENT TO TRAFFIC.

INGRESS/EGRESS ACCESS TO ALL PROPERTIES SHALL BE MAINTAINED THROUGHOUT CONSTRUCTION.

SIDEWALK

THE CONTRACTOR SHALL ADHERE TO ALL ADA STANDARDS. THE CROSS-SLOPE OF ALL SIDEWALK, RAMPS, AND LEVEL LANDINGS SHALL NOT EXCEED 2%, PER ADA STANDARDS.

REMOVALS

SAW CUTTING FOR PAVEMENT REMOVAL AS SHOWN ON THE PLANS OR AS DIRECTED BY THE ENGINEER SHALL BE TO THE DEPTH REQUIRED FOR PROPER REMOVAL OF PAVEMENTS OR CURB.

SAWING DEPTH SHALL BE ADEQUATE TO PREVENT SPALLING, CHIPPING, OR DAMAGE TO EXISTING PAVEMENT EDGES LEFT IN PLACE AS DIRECTED BY THE ENGINEER.

REMOVALS SHALL BE DONE AS SHOWN ON THE PLANS OR AS DIRECTED BY THE ENGINEER IN FIELD.

SIDEWALK REMOVAL LIMITS SHALL BE TO THE NEAREST PANEL. PARTIAL PANEL REMOVALS ARE NOT ACCEPTABLE, UNLESS APPROVED BY THE ENGINEER.

CURB SECTION REMOVALS SHALL BE TO THE NEAREST JOINT. PARTIAL CURB SECTION REMOVALS ARE NOT ACCEPTABLE.

THE CONTRACTOR SHALL REMOVE THE EXISTING PAVEMENT SURFACE, AS DIRECTED BY THE ENGINEER, TO A SUFFICIENT DEPTH IN ORDER TO CONSTRUCT THE PROPOSED PAVEMENT CROSS-SECTION.

PAVEMENT REMOVAL AS SHOWN ON THE PLANS SHALL BE AT THE DISCRETION OF THE ENGINEER. IF IN HIS/HER JUDGEMENT, AREAS OF PAVEMENT MAY BE LEFT IN PLACE, OR ADDITIONAL AREAS ADDED, TO PROVIDE THE PROPER CROSS-SECTION AND BASE, ADJUSTMENTS CAN BE MADE IN THE QUANTITIES.

ALL SIGN SALVAGES SHALL BE PROTECTED AND RESET IMMEDIATELY.

MISS DIG RULES APPLY PRIOR TO SAW CUTTING AND REMOVAL IF SHALLOW LEADS ARE EXPECTED OR ENCOUNTERED, HAND DIGGING OR POT HOLING OUTSIDE OF THE PAVEMENT, BEHIND THE SECTION OF CURB REMOVAL SHALL BE CONDUCTED AT NO ADDITIONAL EXPENSE TO THE OWNER.

SAW CUTS ARE NOT PAID FOR SEPARATELY BUS SHALL BE INCLUDED IN THE REMOVAL ITEMS. SAWING FOR PAVEMENT REMOVAL SHALL BE INCLUDED IN THE ITEM OF PAVT, REM AND SIDEWALK, REM.

THE CONTRACTOR SHALL DISPOSE OF ALL UNSUITABLE MATERIAL AT A SITE OUTSIDE OF THE PROJECT LIMITS, OR AS APPROVED BY THE ENGINEER. NO SEPARATE PAYMENT WILL BE MADE FOR LOADING, HAULING, OR DISPOSING OF THE EXCAVATED UNSUITABLE MATERIALS, BUT SHALL BE INCLUDED IN THE COST OF Station Grading, Case _.

ALL NATURAL SOIL LEFT IN PLACE, IN CUT SECTIONS, SHALL BE COMPACTED TO NOT LESS THAN 95 PERCENT OF MAXIMUM UNIT WEIGHT TO A MINIMUM DEPTH OF 12 INCHES.

THROUGHOUT THE PROJECT, NO UNDERCUTS OR TRENCHES WILL BE LEFT OPEN AND UNBACKFILLED DURING EACH NIGHT OR NON-WORKING HOURS.

ALL SLOPES SHALL BE FINISHED AS CLASS A SLOPES. BACKFILL BEHIND ALL PROPOSED CURB WITH SOUND EARTH FILL AS SPECIFIED ON THE PLANS OR AS DIRECTED BY THE ENGINEER IS INCLUDED IN THE PLAN QUANTITY FOR Station Grading, Case _.

GRADING LIMITS FOR THIS PROJECT ARE SHOWN ON THE PLANS. RESTORATION MEASURES HAVE BEEN INCLUDED IN THE PLANS FOR THE APPROVED GRADING LIMITS. THE CONTRACTOR SHALL SUBMIT AN EARTH CHANGE PLAN FOR ANY WORK BEYOND THE APPROVED LIMITS TO THE ENGINEER TO REVIEW FOR APPROVAL PRIOR TO THE DISTURBANCE. ALL COSTS FOR OBTAINING AND EXECUTING AN APPROVED EARTH CHANGE PLAN, INCLUDING RESTORATION, SHALL BE AT THE CONTRACTOR'S SOLE EXPENSE.

UTILITY NOTES

FOR PROTECTION OF UNDERGROUND UTILITIES AND CONFORMANCE WITH ACT 174 OF THE P.A. OF 2013, THE CONTRACTOR SHALL DIAL 1-800-482-7171 OR 811 A MINIMUM OF THREE FULL WORKING DAYS, EXCLUDING SATURDAYS, SUNDAYS AND HOLIDAYS, PRIOR TO BEGINNING EACH EXCAVATION IN AREAS WHERE PUBLIC UTILITIES HAVE NOT BEEN PREVIOUSLY LOCATED. MEMBERS OF THE 'MISS DIG' ALERT SYSTEM WILL BE ROUTINELY NOTIFIED. THIS DOES NOT RELIEVE THE CONTRACTOR OF THE RESPONSIBILITY OF NOTIFYING UTILITY OWNERS WHO MAY NOT BE PART OF THE 'MISS DIG' ALERT SYSTEM.

THE CONTRACTOR WILL BE RESPONSIBLE FOR ANY DAMAGE TO EXISTING PUBLIC OR PRIVATE UTILITIES DURING THE CONSTRUCTION OF THIS PROJECT. ADEQUATE CARE SHALL BE TAKEN AT ALL TIMES.

THE LOCATIONS SHOWN FOR ALL PUBLIC UTILITIES, INCLUDING WATER SERVICE AND SANITARY SEWER LEADS ARE BASED ON BEST AVAILABLE INFORMATION. NO GUARANTEE IS MADE REGARDING THE ACCURACY OF THIS INFORMATION. THE CONTRACTOR SHALL PERFORM HIS OWN INVESTIGATION(S) IF HE DESIRES TO IN PERFORMING THE WORK OF THIS PROJECT. PAYMENT FOR "EXPLORATORY EXCAVATION, TRENCH" WILL NOT BE PAID FOR UNLESS APPROVED IN ADVANCE BY THE ENGINEER.

UTILITIES

TOWNSHIP PARKS & RESIDENTIAL SERVICES
YPSILANTI TOWNSHIP
ATTN: JOHN HINES
PHONE: (734) 544-3817
EMAIL: jhines@ypsitownship.org

WATER AND SEWER
YPSILANTI COMMUNITY UTILITIES AUTHORITY
ATTN: SCOTT WESTOVER
2777 STATE ROAD,
YPSILANTI MICHIGAN 48198
PHONE: (734) 484-4600
EMAIL: swestover@ycua.org

ELECTRIC TRANSMISSION
DTE, ELECTRIC
ATTN: CLAY COMBEE
DIST. OPS. REGIONAL PLANNING, SW 4
8001 HAGGERTY RD.
BELLEVILLE, MICHIGAN 48111
PHONE: (734) 397-4338
EMAIL: combeec@dteenergy.com

NATURAL GAS DISTRIBUTION
H.P. GAS TRANSMISSION PIPELINE
DTE GAS COMPANY aka MICHCON
MICHCON 20" SUMPTER PIPELINE
ATTN: BASEL DJAZMATI
17150 ALLEN RD.
MELVINDALE, MICHIGAN 48122
PHONE: (248) 825-4636
EMAIL: basel.djazmati@dteenergy.com

H.P. GAS PIPELINE
TRANSCANADA PIPELINE/ ANR PIPELINE
ATTN: KYLE REYNOLDS
6357 SR 66 NORTH
DEFIANCE, OHIO 43512
PHONE: (419) 783-3136
EMAIL: Kyle_Reynolds@transcanada.com

CABLE
COMCAST
ATTN: RAYMOND LABEAU
25626 TELEGRAPH RD
SOUTHFIELD, MI 48034
PHONE: (734) 216-8091
EMAIL: Raymond_LaBeau@cable.comcast.com

TELEPHONE
AT&T
ATTN: ANDY JOHNSON
550 S. MAPLE, 2ND FLOOR
ANN ARBOR, MI 48103
PHONE: (734) 996-5350
EMAIL: aj1726@att.net

USPS POST OFFICE
ATTN: ANTHONY WILLIAMS
PHONE: (734) 482-3046

ANN ARBOR AREA TRANSPORTATION AUTORITY
ATTN:
2700 S INDUSTRIAL HWY
ANN ARBOR MI 48104
PHONE: (734) 973-6500
EMAIL:

GREAT LAKES WATER AUTHORITY (GLWA)
ATTN:
PHONE:
EMAIL:

MISCELLANEOUS

RUBBISH COLLECTION SHALL NOT BE INTERFERED WITH BY CONTRACTOR'S OPERATIONS. IF ACCESS TO CERTAIN AREAS IS BLOCKED BY CONTRACTOR OPERATIONS, HE/SHE SHALL TRANSPORT THE RUBBISH THEMSELVES TO A LOCATION ACCESSIBLE TO COLLECTION CREWS.

MISCELLANEOUS QUANTITIES

THE ITEMS OF WORK LISTED ARE TO BE USED AS THEY APPLY THROUGHOUT THE PROJECT, AS DIRECTED BY THE ENGINEER. THESE ITEMS ARE NOT DETAILED OR INCLUDED IN THE PLAN SHEETS. THESE MAY VARY BASED ON FIELD CONDITIONS.

QUANTITIES THIS SHEET

TOTAL	UNIT	DESCRIPTION
1	LS	Audio Video Route Survey
1	LS	Mobilization, Max. 5%
1	LS	Traffic Maintenance and Control
3	Ea	Tree, Rem, 19 inch to 36 inch
11	Ft	Curb and Gutter, Rem
200	Ft	Fence, Rem
51	Syd	Pavt, Rem
3	Syd	Sidewalk, Rem
3	Ea	Exploratory Excavation
2	Ea	Preserve Utility Marker
100	Ft	Sprinkler Line, Salv and Reset
12	Ea	Sprinkler Head, Salv and Reset
143	Syd	Aggregate Base, 6 inch
40	Ton	Maintenance Gravel
4	Ea	Utility Structure Cover, Adj
20	Ton	Hand Patching
7	Ton	HMA, 4EML
30	Syd	Driveway, Nonreinf Conc, 8 inch
11	Ft	Curb and Gutter, Conc, Det F4
25	Sft	Sidewalk, Conc, 4 inch
200	Ft	Fence, Chain Link, 48 inch
32	Sta	Turf Establishment
1	Dlr	Permit Allowance

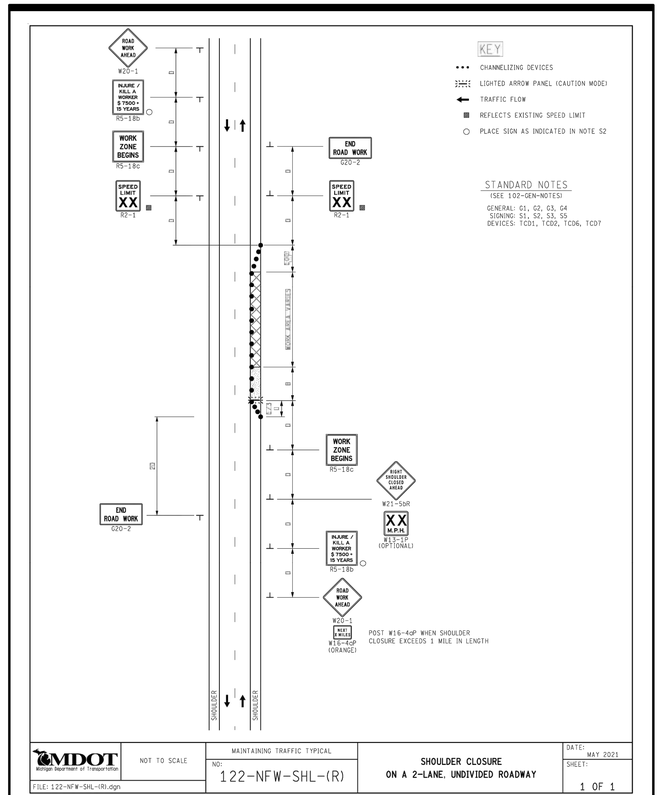

OHM
ARCHITECTS ENGINEERS PLANNERS
OHM-ADVISORS.COM

ISSUED FOR:	DESCRIPTION	DATE
REVISION		
1	FOR BID	08/22/2023

PROJECT NUMBER	PM	DISCIPLINE LEAD	CLIENT PROJ NO
0098-23-0020	MDP	SLM	0098-23-0020

CHARTER TOWNSHIP OF YPSILANTI
RIDGE ROAD SIDEWALK IMPROVEMENTS

GENERAL NOTES

3

COPYRIGHT 2023 OHM ADVISORS. ALL DRAWINGS AND WRITTEN MATERIALS APPEARING HEREIN CONSTITUTE THE ORIGINAL AND UNPUBLISHED WORK OF OHM ADVISORS AND THE SAME MAY NOT BE DUPLICATED, DISTRIBUTED, OR DISCLOSED WITHOUT PRIOR WRITTEN CONSENT OF OHM ADVISORS

DRAWING PATH: \\ohmdfs\Corporate\Projects\0000_0100\0098230020_ridge_rd_sidewalk\Drawings\Civil\Misc\230020LEG_NOT.dwg Aug 08, 2023 - 9:18am

WATER & SEWER UTILITY SYMBOLS

EXISTING

- ST — STORM MANHOLE
- SQUARE CATCH BASIN
- ROUND CATCH BASIN
- CULVERT
- CULVERT W/O END SECTION
- CULVERT W/END SECTION
- S — SANITARY MANHOLE
- CO — CLEAN OUT
- GW — GATE VALVE & WELL
- GATE VALVE & BOX
- W — WATER STOP BOX
- FIRE HYDRANT
- MP — METER PIT
- WATER METER
- SH — SPRINKLER HEAD
- IV — IRRIGATION VALVE

PROPOSED

- STORM MANHOLE
- INLET/CATCH BASIN
- CULVERT END SECTION
- SANITARY MANHOLE
- GV&W — GATE VALVE & WELL
- GV&B — GATE VALVE & BOX
- TSV&W — TAPPING SLEEVE VALVE & WELL
- TSV&B — TAPPING SLEEVE VALVE & BOX
- FIRE HYDRANT

REAL ESTATE SYMBOLS

- CONTIGUOUS PROPERTY SYMBOL
- XXXX — PARCEL NUMBER BOX
- XXXX — NO ROW IMPACTS

MISCELLANEOUS UTILITY SYMBOLS

EXISTING

- GUY WIRE
- GP — GUY POLE
- U — UTILITY POLE
- U — UTILITY POLE W/LIGHT
- LIGHT/DECOR LAMP POLE
- F — FLOOD LIGHT
- GAS VALVE
- G — GAS VENT
- G — GAS METER
- G — GAS RISER
- TRAFFIC SIGNAL
- P — PEDESTRIAN RISER
- E — TRANSFORMER PAD
- U — PRIVATE UTILITY MANHOLE
- R R — RAILROAD CROSSING
- E — ELECTRIC METER
- PB — PHONE BOOTH
- TS — TRAFFIC SIGNAL CONTROLLER
- HAND HOLE
- E — ELECTRIC RISER
- T — TELEPHONE RISER
- C — CABLE TV RISER
- W — MONITORING WELL
- UNDERGROUND MARKER

MISCELLANEOUS SYMBOLS

EXISTING

- RIPRAP
- SIGN
- FLOW DIRECTION
- STUMP
- WETLAND
- CONIFEROUS TREE — CL 1 1" TO 5", CL 2 6" TO 17", CL 3 18" TO 35", CL 4 36" AND UP
- DECIDUOUS TREE — CL 1 1" TO 5", CL 2 6" TO 17", CL 3 18" TO 35", CL 4 36" AND UP
- CONIFEROUS SHRUB
- DECIDUOUS SHRUB
- SB# — SOIL BORING
- SECTION CORNER
- MON — MONUMENT
- IRON ROD/PIPE
- PK — PK NAIL
- BM# — BENCHMARK
- TP# — TRAVERSE POINT
- MAIL/NEWSPAPER BOX
- FP — FLAG POLE
- POST
- HAZARDOUS OR FLAMMABLE MATERIAL — USED WITH UNDERGROUND GAS & ELECTRICAL LINES
- CAUTION – CRITICAL UNDERGROUND UTILITY — USED WITH TELEPHONE & FIBER OPTIC LINES

PROPOSED

- RIPRAP
- SIGN
- FLOW DIRECTION
- XX XX XXX — STRUCTURE NUMBER WM SAN STM
- ADA SIDEWALK RAMP
- SIDEWALK
- ALTERNATE A

UTILITY PATTERN

EXISTING

- ELEC — ELECTRICAL *
- 6" (COMPANY) GAS — GAS\OIL
- (COMPANY) CABLE/TEL — CABLE/TELEPHONE *
- FIBER OPTIC — FIBER OPTIC *
- 12" WM — WATER
- 12" SAN — SANITARY
- 12" STM — STORM

PROPOSED

- 12" — STORM/SANITARY/WATER
- 12" — PRIMARY UTILITY WILL HAVE A CONTINUOUS LINESTYLE, WITH THE SECONDARY UTILITY MATCHING ITS RESPECTIVE EXISTING UTILITY LINESTYLE

*O.H. = OVERHEAD , U.G. = UNDERGROUND

ROW PATTERN

EXISTING

- ROW — ROW
- SECTION
- PROPERTY/PARCEL

PROPOSED

- ROW — ROW

TOPO PATTERN

EXISTING

- HEDGE/TREE
- FENCE
- GUARDRAIL
- CENTERLINE OF DITCH
- RAILROAD
- WETLAND/EDGE OF WATER

PROPOSED

- GRADING LIMIT (SLOPE STAKE)
- CONTOUR
- CENTERLINE OF DITCH
- GUARDRAIL
- FENCE

REMOVAL LEGEND

- SIDEWALK REMOVAL
- HMA SURFACE REMOVAL
- PAVEMENT REMOVAL
- COLD MILLING HMA SURFACE
- HMA BASE CRUSHING AND SHAPING
- EXCAVATION, EARTH, MODIFIED
- CURB AND GUTTER, REM
- TREE, REM
- S-XXXXXX — SALVAGE
- B-XXXXXX — BULKHEAD
- A-XXXXXX — ABANDON
- R-XXXXXX — REMOVE
- ADJ-XXXXXX — ADJUST
- REL-XXXXXX — RELOCATE
- REC-XXXXXX — RECONSTRUCT
- R B/O-XXXXXX — REMOVE BY OTHERS
- ADJ B/O-XXXXXX — ADJUST BY OTHERS
- REL B/O-XXXXXX — RELOCATE BY OTHERS

IF NECESSARY FOR CLARITY

- S — SALVAGE
- B — BULKHEAD
- A — ABANDON
- C — CLEARING
- R — REMOVE
- REL — RELOCATE
- REC — RECONSTRUCT
- REL B/O — RELOCATE BY OTHERS
- ADJ B/O — ADJUST BY OTHERS

SPECIAL LEGEND

- INLET FILTER

OHM
ARCHITECTS ENGINEERS PLANNERS
OHM-ADVISORS.COM

ISSUED FOR:	DESCRIPTION
REVISION	
FOR BID	
DATE	
08/22/2023	

PROJECT NUMBER	PM	DISCIPLINE LEAD	CLIENT PROJ NO
0098-23-0020	MDP	SLM	0098-23-0020

CHARTER TOWNSHIP OF YPSILANTI
RIDGE ROAD SIDEWALK IMPROVEMENTS

LEGEND

4

COPYRIGHT 2023 OHM ADVISORS. ALL DRAWINGS AND WRITTEN MATERIALS APPEARING HEREIN CONSTITUTE THE ORIGINAL AND UNPUBLISHED WORK OF OHM ADVISORS AND THE SAME MAY NOT BE DUPLICATED, DISTRIBUTED, OR DISCLOSED WITHOUT PRIOR WRITTEN CONSENT OF OHM ADVISORS

DRAWING PATH: \\ohmdfs\Corporate\Projects\0000_0100\0098\230020_ridge_rd_sidewalk\Drawings\Civil\Misc\230020LEG_NOT.dwg Aug 08, 2023 - 9:36am

JOB BENCHMARK #200
SET SPIKE IN e FACE OF UTIL POLE, NE QUAD OF US-12 AND RIDGE RD
ELEV 726.19

JOB BENCHMARK #201
SET SPIKE IN UTIL POLE @ NE QUAD OF RIDGE RD AND HOLMES
ELEV 725.91

TRAVERSE POINT #100
N 275478.63
E 13343388.15 ELEV 726.13

TRAVERSE POINT #101
N 275887.48
E 13343350.26 ELEV 725.16

RIDGE ROAD
(66' R.O.W.)

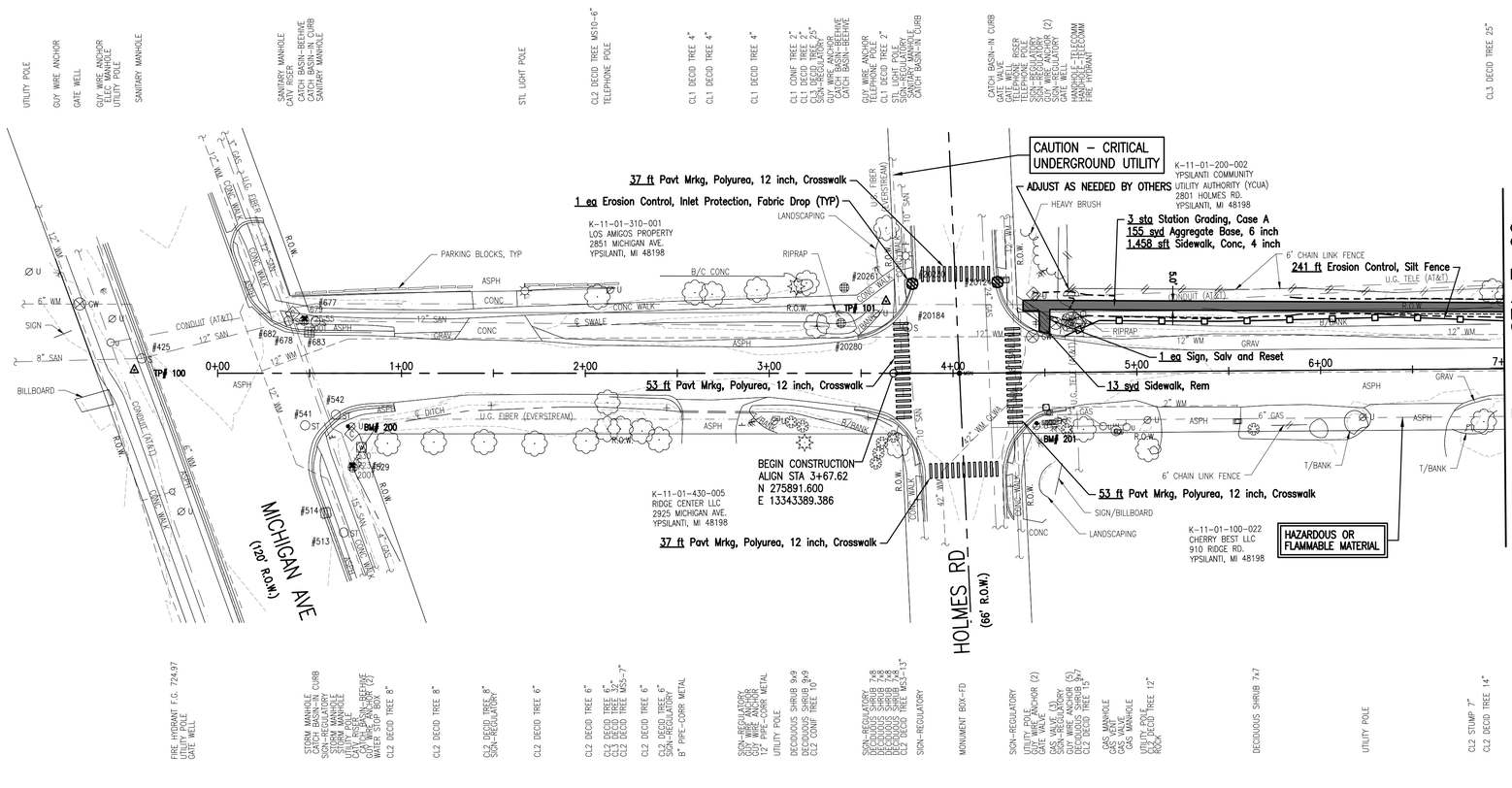

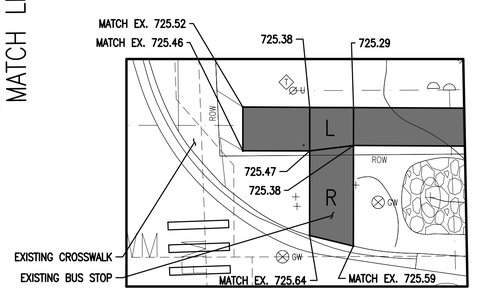

NORTHWEST CORNER OF RIDGE RD AND HOLMES RD
EXISTING BUS STOP REHAB
DETAILED GRADING
SCALE: 1" = 10'

QUANTITIES THIS SHEET

TOTAL	UNIT	DESCRIPTION
13	Syd	Sidewalk, Rem
3	Sta	Station Grading, Case A
2	Ea	Erosion Control, Inlet Protection, Fabric Drop
241	Ft	Erosion Control, Silt Fence
155	Syd	Aggregate Base, 6 inch
1458	Sft	Sidewalk, Conc, 4 inch
1	Ea	Sign, Salv and Reset
180	Ft	Pavt Mrkg, Polyurea, 12 inch, Crosswalk

Know what's **below.**
Call before you dig.

GRAPHIC SCALE: HALF 80 feet, FULL 40 feet
0 20 40 80 120

OHM
ARCHITECTS ENGINEERS PLANNERS
OHM-ADVISORS.COM

ISSUED FOR:	FOR BID
REVISION	DESCRIPTION
	08/22/2023
	DATE

PROJECT NUMBER	PM	DISCIPLINE LEAD	CLIENT PROJ NO
0098-23-0020	MDP	SLM	0098-23-0020

CHARTER TOWNSHIP OF YPSILANTI
RIDGE ROAD SIDEWALK IMPROVEMENTS
P.O.B. TO STA 7+00
CONSTRUCTION PLAN

5

COPYRIGHT 2023 OHM ADVISORS, ALL DRAWINGS AND WRITTEN MATERIALS APPEARING HEREIN CONSTITUTE THE ORIGINAL AND UNPUBLISHED WORK OF OHM ADVISORS AND THE SAME MAY NOT BE DUPLICATED, DISTRIBUTED, OR DISCLOSED WITHOUT PRIOR WRITTEN CONSENT OF OHM ADVISORS

DRAWING PATH: \\ohmdfs\Corporate\Projects\0000_0100\0098230020_ridge_rd_sidewalk\Drawings\Civil\Plans_Const\230020CON_01.dwg Aug 08, 2023, 9:19am

JOB BENCHMARK #202 SET SPIKE IN W FACE OF UTIL POLE 45' N OF SPEED LIMIT SIGN, 60' NW EDGE OF GRAV LOT ELEV 725.64
JOB BENCHMARK #203 SET SPIKE IN UTIL POLE E SIDE OF RIDGE RD. 65' N OF CL DRIVE ON W SIDE OF RIDGE RD. ELEV 721.49
TRAVERSE POINT #102 N 276386.17 E 13343403.84 ELEV 723.64
TRAVERSE POINT #103 N 276910.41 E 13343348.95 ELEV 722.65

RIDGE ROAD
(66' R.O.W.)

N

GRAPHIC SCALE: HALF 80 feet, FULL 40 feet
0 20 40 80 120

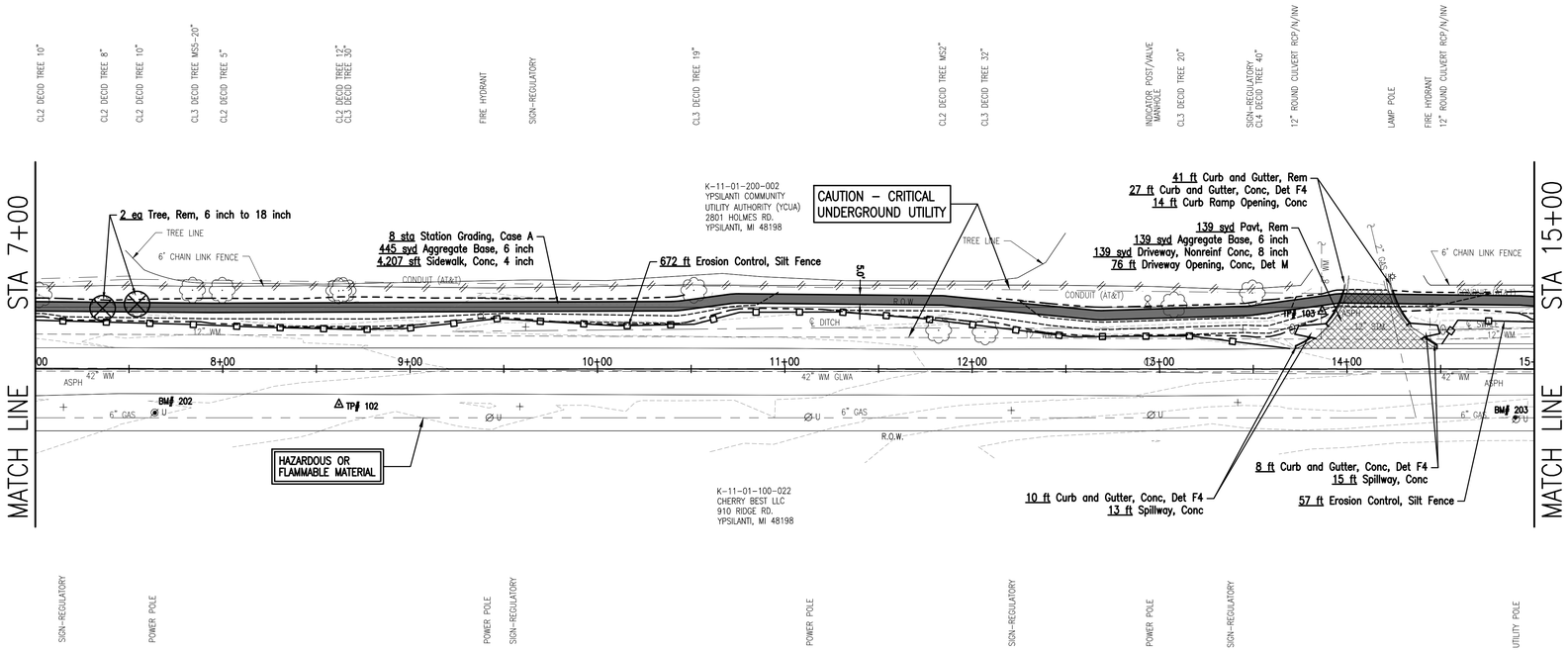

QUANTITIES THIS SHEET

TOTAL	UNIT	DESCRIPTION
2	Ea	Tree, Rem, 6 inch to 18 inch
41	Ft	Curb and Gutter, Rem
139	Syd	Pavt, Rem
8	Sta	Station Grading, Case A
729	Ft	Erosion Control, Silt Fence
584	Syd	Aggregate Base, 6 inch
139	Syd	Driveway, Nonreinf Conc, 8 inch
45	Ft	Curb and Gutter, Conc, Det F4
76	Ft	Driveway Opening, Conc, Det M
28	Ft	Spillway, Conc
14	Ft	Curb Ramp Opening, Conc
4207	Sft	Sidewalk, Conc, 4 inch

Know what's **below.**
Call before you dig.

OHM
ARCHITECTS ENGINEERS PLANNERS
OHM-ADVISORS.COM

ISSUED FOR:	DATE
FOR BID	08/22/2023
REVISION	DESCRIPTION
---	---

PROJECT NUMBER	PM	DISCIPLINE LEAD	CLIENT PROJ NO
0098-23-0020	MDP	SLM	0098-23-0020

CHARTER TOWNSHIP OF YPSILANTI
RIDGE ROAD SIDEWALK IMPROVEMENTS
STA 7+00 TO STA 15+00
CONSTRUCTION PLAN

COPYRIGHT 2023 OHM ADVISORS; ALL DRAWINGS AND WRITTEN MATERIALS APPEARING HEREIN CONSTITUTE THE ORIGINAL AND UNPUBLISHED WORK OF OHM ADVISORS AND THE SAME MAY NOT BE DUPLICATED, DISTRIBUTED, OR DISCLOSED WITHOUT PRIOR WRITTEN CONSENT OF OHM ADVISORS

DRAWING PATH: \\ohmmifs\Corporate\Projects\0000_0100\0098\23\0020_ridge_rd_sidewalk\Drawings\Civil\Plans_Const\230020CON_01.dwg Aug 08, 2023 - 9:19am

JOB BENCHMARK #204
SET SPIKE IN UTIL POLE, E SIDE OF RIDGE RD, 9' W OF NE BLDG CORNER.
ELEV 723.28

TRAVERSE POINT #104
N 277422.02
E 1334393.47 ELEV 722.07

RIDGE ROAD
(66' R.O.W.)

GRAPHIC SCALE: FULL HALF
0 20 40 80 120
80 feet
40 feet

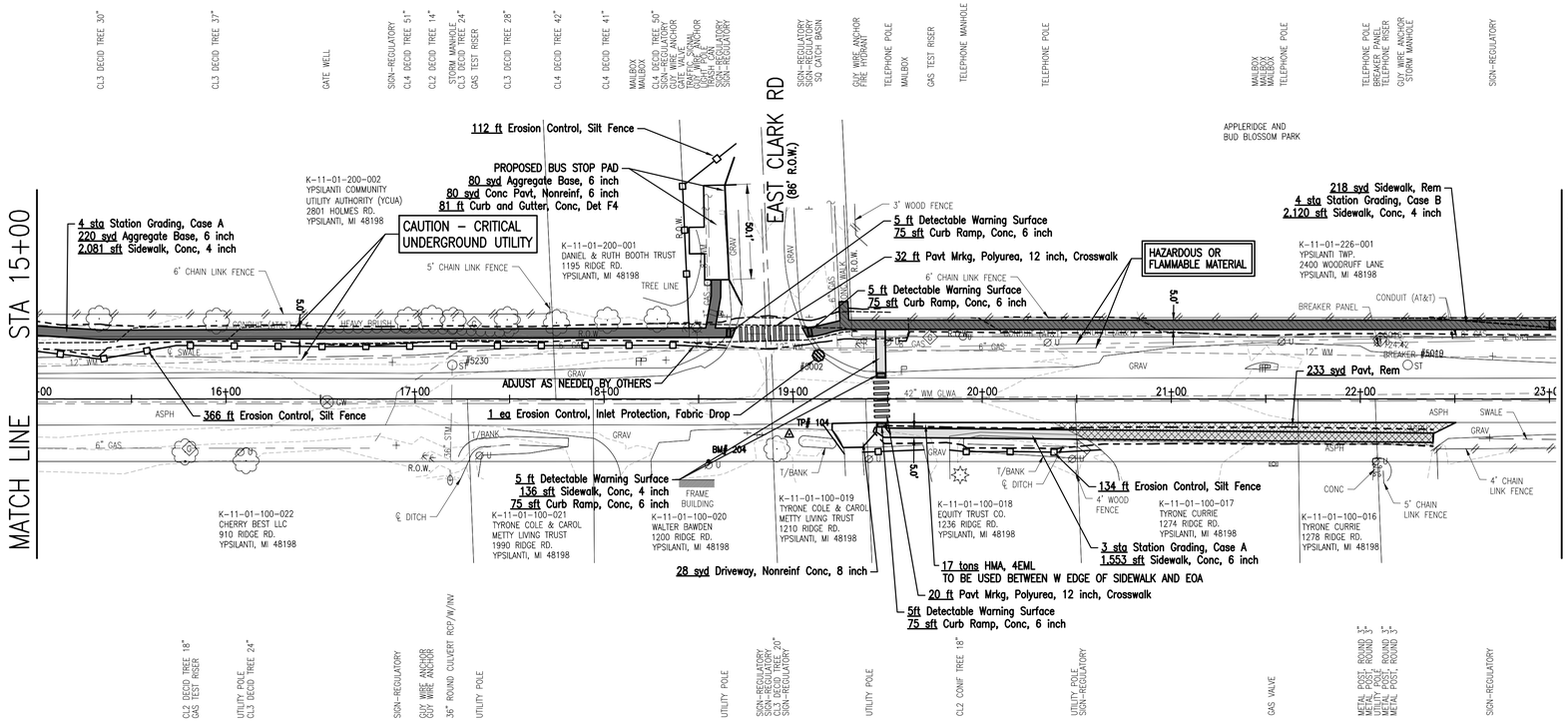

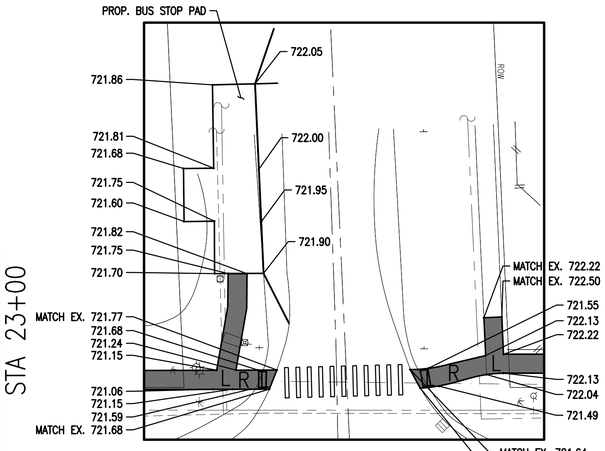

RIDGE RD AND CLARK RD
PROPOSED BUS STOP & CROSSING
DETAILED GRADING
SCALE: 1" = 20'

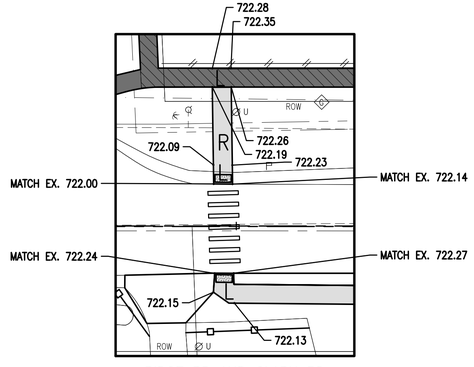

RIDGE RD AND CLARK RD
ALTERNATE A CROSSING
DETAILED GRADING
SCALE: 1" = 20'

QUANTITIES THIS SHEET

TOTAL	UNIT	DESCRIPTION
218	Syd	Sidewalk, Rem
4	Sta	Station Grading, Case A
4	Sta	Station Grading, Case B
1	Ea	Erosion Control, Inlet Protection, Fabric Drop
478	Ft	Erosion Control, Silt Fence
300	Syd	Aggregate Base, 6 inch
80	Syd	Conc Pavt, Nonreinf, 6 inch
81	Ft	Curb and Gutter, Conc, Det F4
10	Ft	Detectable Warning Surface
4200	Sft	Sidewalk, Conc, 4 inch
150	Sft	Curb Ramp, Conc, 6 inch
32	Ft	Pavt Mrkg, Polyurea, 12 inch, Crosswalk

QUANTITIES THIS SHEET - ALTERNATE A

TOTAL	UNIT	DESCRIPTION
233	Syd	Pavt, Rem
3	Sta	Station Grading, Case A
134	Ft	Erosion Control, Silt Fence
17	Ton	HMA, 4EML
28	Syd	Driveway, Nonreinf Conc, 8 inch
10	Ft	Detectable Warning Surface
136	Sft	Sidewalk, Conc, 4 inch
1553	Sft	Sidewalk, Conc, 6 inch
150	Sft	Curb Ramp, Conc, 6 inch
20	Ft	Pavt Mrkg, Polyurea, 12 inch, Crosswalk

LEGEND
SIDEWALK
ALTERNATE A

Know what's below.
Call before you dig.

OHM
ARCHITECTS ENGINEERS PLANNERS
OHM-ADVISORS.COM

ISSUED FOR:	DESCRIPTION	DATE
FOR BID		08/22/2023
REVISION		
1		

PROJECT NUMBER	PM	DISCIPLINE LEAD	CLIENT PROJ NO
0098-23-0020	MDP	SLM	0098-23-0020

CHARTER TOWNSHIP OF YPSILANTI
RIDGE ROAD SIDEWALK IMPROVEMENTS
STA 15+00 TO STA 23+00
CONSTRUCTION PLAN

7

COPYRIGHT 2023 OHM ADVISORS. ALL DRAWINGS AND WRITTEN MATERIALS APPEARING HEREIN CONSTITUTE THE ORIGINAL AND UNPUBLISHED WORK OF OHM ADVISORS AND THE SAME MAY NOT BE DUPLICATED, DISTRIBUTED, OR DISCLOSED WITHOUT PRIOR WRITTEN CONSENT OF OHM ADVISORS

DRAWING PATH: \\ohmdfs\Corporate\Projects\0000_0100\0098230020_ridge_rd_sidewalk\Drawings\CivilPlans_Comet230020CON_01.dwg Aug 08, 2023 - 9:19am

JOB BENCHMARK #205
FOUND RR SPIKE U UTIL POLE.
15' W OF EDGE/BIT, 17' S OF
GRAV DRIVE.
ELEV 726.16

JOB BENCHMARK #206
SET SPIKE IN UTIL POLE
@1424 RIDGE RD, 17' E OF RIDGE
ELEV 726.45

TRAVERSE POINT #105
N 277906.07
E 13343347.48 ELEV 724.76

TRAVERSE POINT #106
N 278404.00
E 13343391.89 ELEV 724.86

RIDGE ROAD
(66' R.O.W.)

HALF 80 feet
GRAPHIC SCALE: FULL 40 feet
0 20 40 80 120

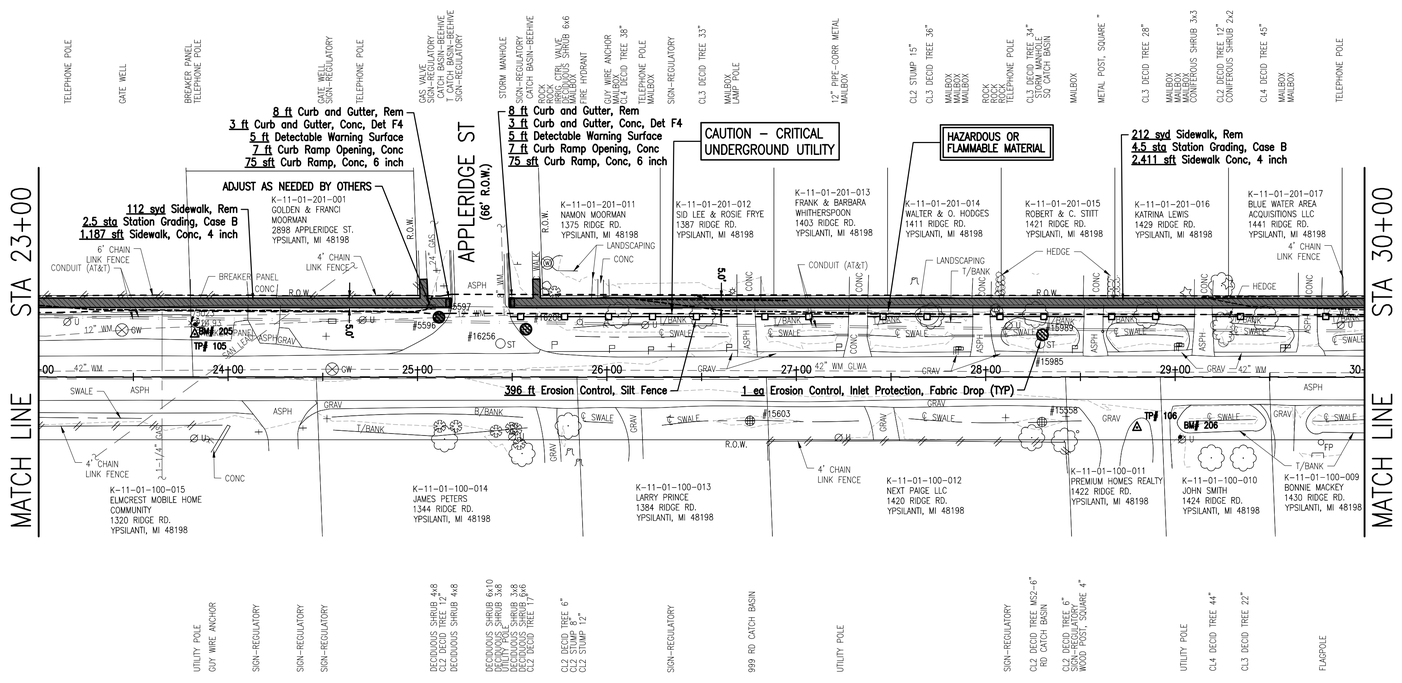

QUANTITIES THIS SHEET

TOTAL	UNIT	DESCRIPTION
16	Ft	Curb and Gutter, Rem
324	Syd	Sidewalk, Rem
7	Sta	Station Grading, Case B
3	Ea	Erosion Control, Inlet Protection, Fabric Drop
396	Ft	Erosion Control, Silt Fence
6	Ft	Curb and Gutter, Conc, Det F4
10	Ft	Detectable Warning Surface
14	Ft	Curb Ramp Opening, Conc
3598	Sft	Sidewalk, Conc, 4 inch
150	Sft	Curb Ramp, Conc, 6 inch

Know what's **below.**
Call before you dig.

OHM
ARCHITECTS ENGINEERS PLANNERS
OHM-ADVISORS.COM

ISSUED FOR:	FOR BID	08/22/2023
REVISION	DESCRIPTION	DATE
—		

PROJECT NUMBER	PM	DISCIPLINE LEAD	CLIENT PROJ NO
0098-23-0020	MDP	SLM	0098-23-0020

CHARTER TOWNSHIP OF YPSILANTI
RIDGE ROAD SIDEWALK IMPROVEMENTS
STA 23+00 TO STA 30+00
CONSTRUCTION PLAN

8

COPYRIGHT 2023 OHM ADVISORS, ALL DRAWINGS AND WRITTEN MATERIALS APPEARING HEREIN CONSTITUTE THE ORIGINAL AND UNPUBLISHED WORK OF OHM ADVISORS AND THE SAME MAY NOT BE DUPLICATED, DISTRIBUTED, OR DISCLOSED WITHOUT PRIOR WRITTEN CONSENT OF OHM ADVISORS

DRAWING PATH: \\ohmdfs\Corporate\Projects\0000_0100\0098\230020_ridge_rd_sidewalk\Drawings\CivilPlans_Cover\230020CON_01.dwg Aug 09, 2023 - 9:19am

JOB BENCHMARK #207
SET SPIKE IN E FACE OF UTIL POLE
W SIDE OF RIDGE, 18' W TEL MH,
25' S 6' FENCE COR.
ELEV 726.71

TRAVERSE POINT #107
N 278823.36
E 13343375.03 ELEV 725.30

RIDGE ROAD
(66' R.O.W.)

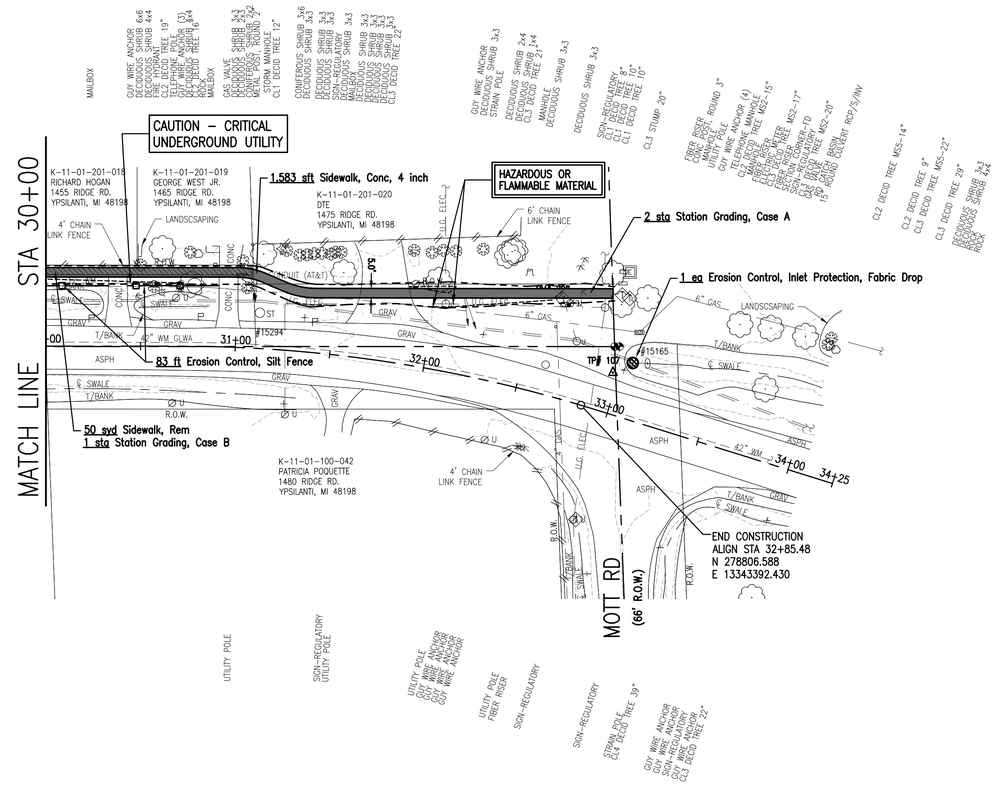

HALF 80 feet
GRAPHIC SCALE: FULL 40 feet
0 20 40 80 120

QUANTITIES THIS SHEET

TOTAL	UNIT	DESCRIPTION
50	Syd	Sidewalk, Rem
2	Sta	Station Grading, Case A
1	Sta	Station Grading, Case B
1	Ea	Erosion Control, Inlet Protection, Fabric Drop
83	Ft	Erosion Control, Silt Fence
1583	Sft	Sidewalk, Conc, 4 inch

Know what's **below.**
Call before you dig.

OHM
ARCHITECTS ENGINEERS PLANNERS
OHM-ADVISORS.COM

ISSUED FOR:	FOR BID	08/22/2023
REVISION	DESCRIPTION	DATE
—		

PROJECT NUMBER	PM	DISCIPLINE LEAD	CLIENT PROJ NO
0098-23-0020	MDP	SLM	0098-23-0020

CHARTER TOWNSHIP OF YPSILANTI
RIDGE ROAD SIDEWALK IMPROVEMENTS
STA 30+00 TO P.O.E.
CONSTRUCTION PLAN

9

COPYRIGHT 2023 OHM ADVISORS. ALL DRAWINGS AND WRITTEN MATERIALS APPEARING HEREIN CONSTITUTE THE ORIGINAL AND UNPUBLISHED WORK OF OHM ADVISORS AND THE SAME MAY NOT BE DUPLICATED, DISTRIBUTED, OR DISCLOSED WITHOUT PRIOR WRITTEN CONSENT OF OHM ADVISORS

DRAWING PATH: \\ohmdfs\Corporate\Projects\0000_0100\0098\23\0020_ridge_rd_sidewalk\Drawings\Civil\Plans_Cover\230020CON_01.dwg Aug 08, 2023 - 9:19am

DIVERSION DITCH (E-1)

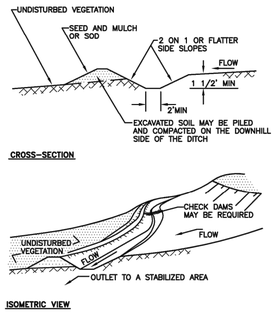

EARTH DIVERSION BERM (E-2)

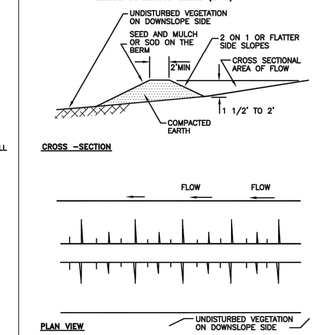

CHECK DAMS (E-3)

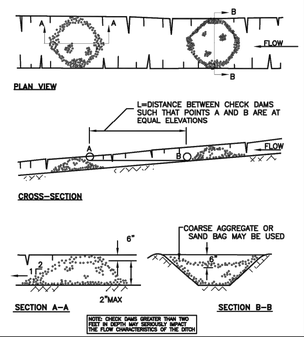

LEVEL SPREADER (E-4)

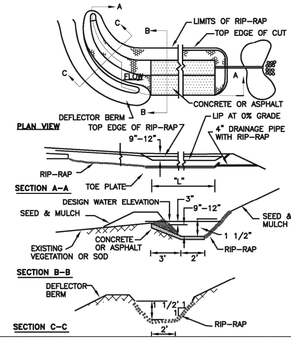

FLUME (E-5)

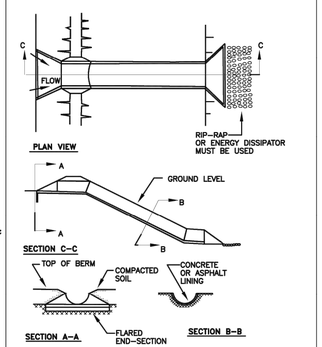

SECTIONAL DOWNDRAIN (E-6)

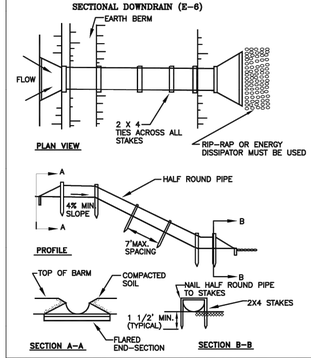

RIP-RAP (E-7)

DEFINITION — RIP-RAP IS A ROCK-TYPE MATERIAL PLACED ON THE LAND SURFACE TO RESIST THE ACTIONS OF FLOWING WATER

PURPOSE — THE PURPOSE OF RIP-RAP IS (1) TO DISSIPATE ENERGY RESULTING FROM FLOWING WATER, THUS REDUCING THE FLOW VELOCITY TO A LEVEL THAT IS NON-EROSIVE, AND (2) TO PROTECT THE LAND SURFACE FROM EROSION RESULTING FROM THE ENERGY FORCES GENERATED BY FLOWING WATER.

WHERE APPLICABLE — RIP-RAP IS USED (1) AT THE OUTLET OF A STORM DRAIN, (2) AS A CHANNEL LINING WHEN FLOW VELOCITIES AND CONCENTRATION ARE HIGH AND/OR THE CHANNEL SLOPE IS STEEP, (3) ON THE BANKS OF CHANNELS AT CHANGES IN FLOW DIRECTION, AND (4) TO STABILIZE ERODIBLE SLOPES.

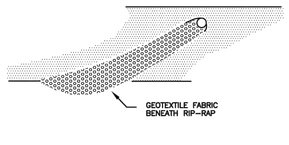

SURFACE ROUGHENING (E-8) AND SCARIFICATION

THIS IS AN EASY AND ECONOMICAL WAY TO REDUSE SOIL EROSION. IT IS SIMPLY THE PLACING OF HORIZONTAL GROOVES IN A SLOPE PERPENDICULAR TO THE FLOW OF RUNOFF. THIS CAN BE DONE BY EITHER DISC HARROWING, BACK BLADING OR JUST RUNNING THE TREADS OF A CRAWLER TRACTOR PERPENDICULAR TO THE SLOPE AS SHOWN BELOW.

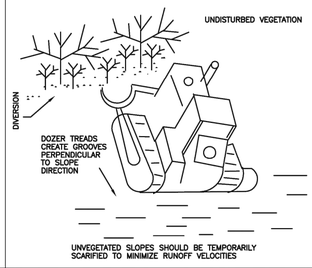

VEGETATION BUFFER ZONE (SP-1)

THE GRAPH LISTED BELOW IS USED TO DETERMINE THE ADEQUACY OF AN EXISTING VEGETATION BUFFER ZONE FOR USE AS A SEDIMENT FILTER. THIS GRAPH IS ONLY APPLICABLE IF THE VEGETATION IS A DENSE WELL-GROWN STAND OF GROUND COVER, AT LEAST 4" IN LENGTH. AN AREA COVERED WITH BUSHES AND TREES WITHOUT A GOOD GROUND COVER IS NOT ACCEPTABLE.

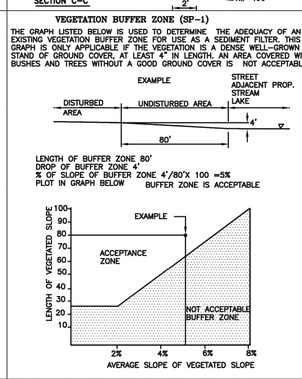

SILT FENCE (SP-2)

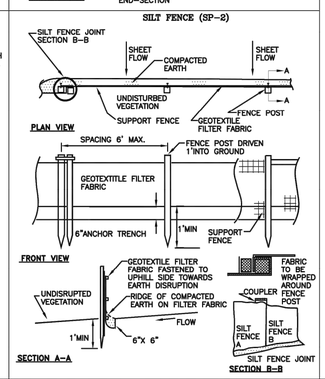

STRAW BALE DIVERSION BERM (SP-3)

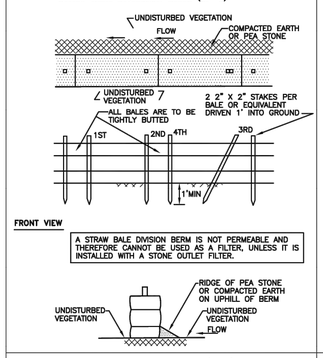

STRAW BALE DIVERSION BERM (SP-4)

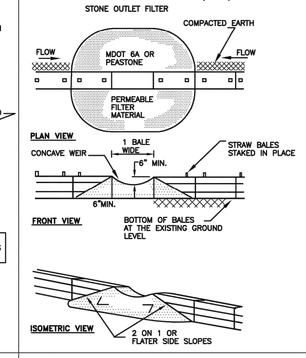

EARTH DIVERSION BERM (SP-5)

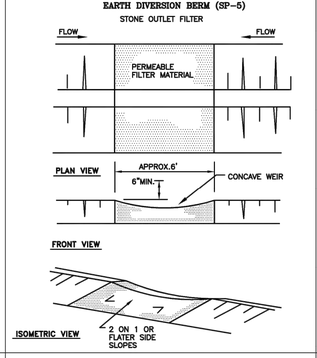

STONE FILTER BERM (SP-7)

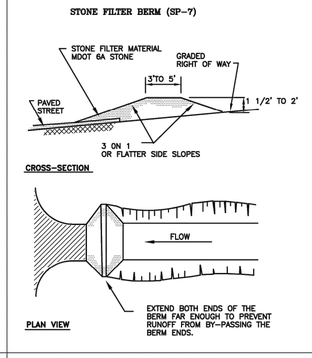

GRAVEL INTERCEPTOR DIKE (SP-8)

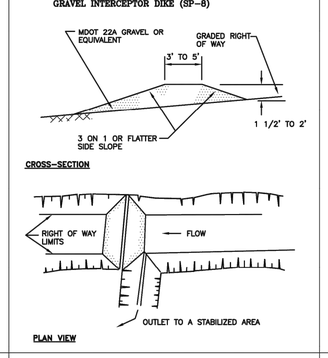

SOIL INTERCEPTOR DIKE (SP-9)

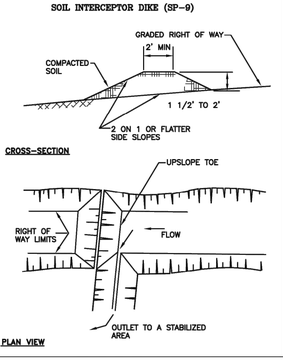

LOW POINT INLET FILTER (SI-2)

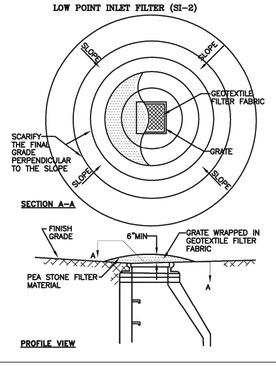

INLET SEDIMENT PIT (SI-3)

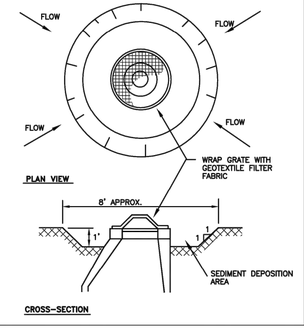

PARKING LOT INLET FILTER (SI-1)

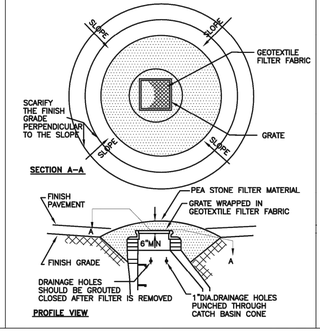

CURB AND GUTTER INLET FILTER (SI-5)
(BEFORE PAVING)

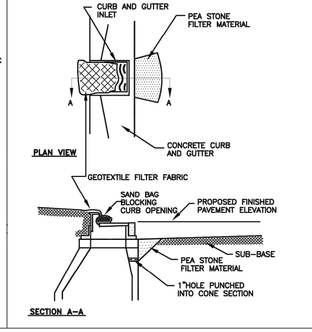

CURB AND GUTTER INLET FILTER (SI-6)
(AFTER PAVING)

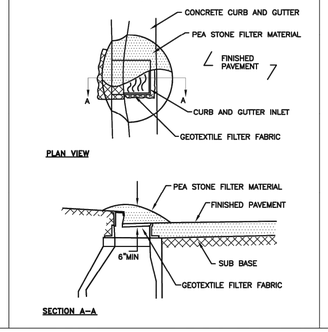

SOD INLET FILTER (SI-8)

DEFINITION — SOD INLET FILTER ARE PADS OF SOD PLACED AROUND A STORM DRAIN INLET OR CATCH BASIN.

PURPOSE — SOD INLET FILTERS ARE INSTALLED TO SLOW THE FLOW OF WATER INTO AN INLET OR CATCH BASIN AND TO FILTER OUT APPRECIABLE AMOUNTS OF SEDIMENT IN IN THE PROCESS.

WHERE APPLICABLE — SOD INLET FILTERS SHOULD ONLY BE USED TO HANDLE LIGHT CONCENTRATIONS OF SEDIMENT. THEY ARE BEST USED AFTER FINAL GRADING IS COMPLETE AND DURING THE ESTABLISHMENT OF A VEGETATIVE COVER.

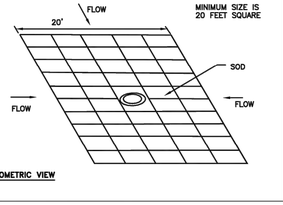

DITCH SEDIMENT TRAP (SO-5)

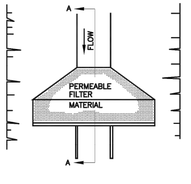

RULE 323.1703
SOIL EROSION AND SEDIMENTATION CONTROL PLAN REQUIREMENTS.

A PERSON SHALL PREPARE A SOIL EROSION AND SEDIMENTATION CONTROL PLAN FOR ANY EARTH CHANGE IDENTIFIED IN R 323.1704. A PERSON SHALL DESIGN THE PLAN TO EFFECTIVELY REDUCE ACCELERATED SOIL EROSION AND SEDIMENTATION AND SHALL IDENTIFY FACTORS THAT MAY CONTRIBTUE TO SOIL EROSION OR SEDIMENTATION, OR BOTH. THE PLAN SHALL INCLUDE, BUT NOT BE LIMITED TO, ALL OF THE FOLLOWING:

(A) A MAP OR MAPS AT A SCALE OF NOT MORE THAN 200 FEET TO THE INCH OR AS OTHERWISE DETERMINED BY THE COUNTY OR LOCAL ENFORCING AGENCY. A MAP SHALL INCLUDE A LEGAL DESCRIPTION AND SITE LOCATION SKETCH THAT INCLUDES THE PROXIMITY OF ANY PROPOSED EARTH CHANGE TO LAKES OR STREAMS, OR BOTH; PREDOMINATE LAND FEATURES; AND CONTOUR INTERVALS OR SLOPE DESCRIPTION.

(B) A SOILS SURVEY OR A WRITTEN DESCRIPTION OF THE SOIL TYPES OF THE EXPOSED LAND AREA CONTEMPLATED FOR THE EARTH CHANGES.

(C) DETAILS FOR PROPOSED EARTH CHANGES, INCLUDING ALL OF THE FOLLOWING:

(i) A DESCRIPTION AND THE LOCATION OF THE PHYSICAL LIMITS OF EACH PROPOSED EARTH CHANGE.

(ii) A DESCRIPTION AND THE LOCATION OF ALL EXISTING AND PROPOSED ON-SITE DRAINAGE AND DEWATERING FACILITIES.

(iii) THE TIMING SEQUENCE OF EACH PROPOSED EARTH CHANGE.

(iv) THE LOCATION AND DESCRIPTION FOR INSTALLING AND REMOVING ALL PROPOSED TEMPORARY SOIL EROSION AND SEDIMENTATION CONTROL MEASURES.

(v) A DESCRIPTION AND THE LOCATION OF ALL PROPOSED PERMANENT SOIL EROSION AND SEDIMENTATION MEASURES.

(v) A PROGRAM PROPOSAL FOR THE CONTINUED MAINTENANCE OF ALL PERMANENT SOIL EROSION AND SEDIMENTATION CONTROL MEASURES THAT REMAIN AFTER PROJECT COMPLETION, INCLUDING THE DESIGNATION OF THE PERSON RESPONSIBLE FOR THE MAINTENANCE. MAINTENANCE RESPONSIBILITIES SHALL BECOME A PART OF ANY SALES OR EXCHANGE AGREEMENT FOR THE LAND ON WHICH THE PERMANENT SOIL EROSION CONTROL MEASURES ARE LOCATED.

OHM
ARCHITECTS ENGINEERS PLANNERS
OHM-ADVISORS.COM

ISSUED FOR:	DESCRIPTION
REVISION	FOR BID
---	---

08/22/2023 DATE

PROJECT NUMBER	DISCIPLINE LEAD	CLIENT PROJ NO
0098-23-0020	PM	
0098-23-0020	MDP	SLM

CHARTER TOWNSHIP OF YPSILANTI
RIDGE ROAD SIDEWALK IMPROVEMENTS

DET_SESC

COPYRIGHT 2023 OHM ADVISORS, ALL DRAWINGS AND WRITTEN MATERIALS APPEARING HEREIN CONSTITUTE THE ORIGINAL AND UNPUBLISHED WORK OF OHM ADVISORS AND THE SAME MAY NOT BE DUPLICATED, DISTRIBUTED, OR DISCLOSED WITHOUT PRIOR WRITTEN CONSENT OF OHM ADVISORS

DRAWING PATH: \ohmdfs\Corporate\Projects\0000_0100\0098230020_ridge_rd_sidewalk\Drawings\Civil\Details\230020DET.dwg Aug 08, 2023 - 9:20am

DOG HOUSE CUT OUT SIZES	
SEWER SIZE	MAX. CUT OUT SIZE
8" THRU 10"	17 1/2"
12" THRU 15"	20"

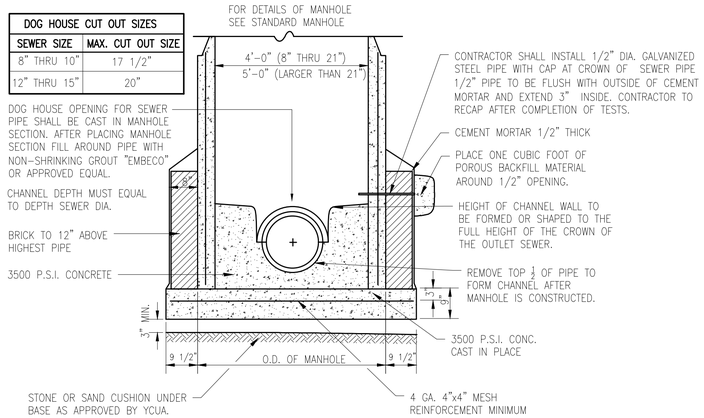

SANITARY MANHOLE
ON EXISTING SEWERS 8" THRU 42"
NOT TO SCALE

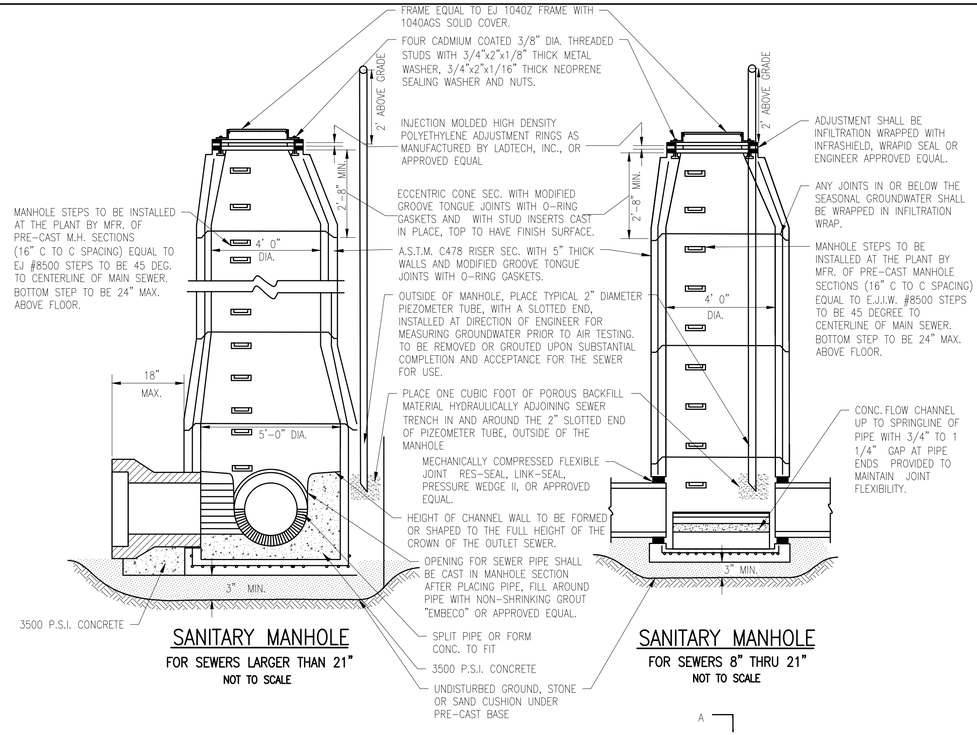

SANITARY MANHOLE
FOR SEWERS LARGER THAN 21"
NOT TO SCALE

SANITARY MANHOLE
FOR SEWERS 8" THRU 21"
NOT TO SCALE

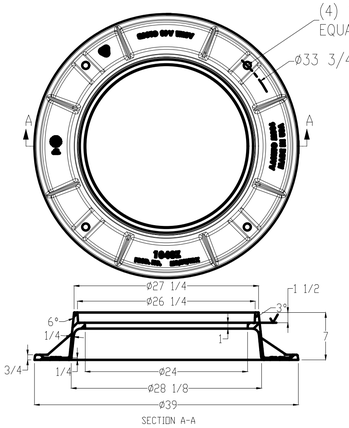

1040Z FRAME

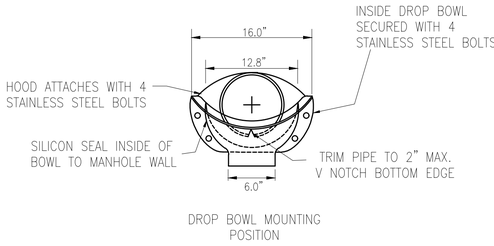

DROP BOWL MOUNTING POSITION

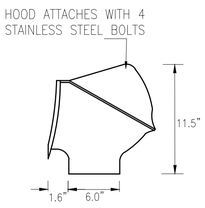

DROP BOWL WITH LINE HOOD

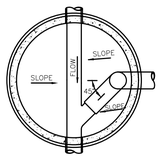

INTERIOR DROP – PLAN

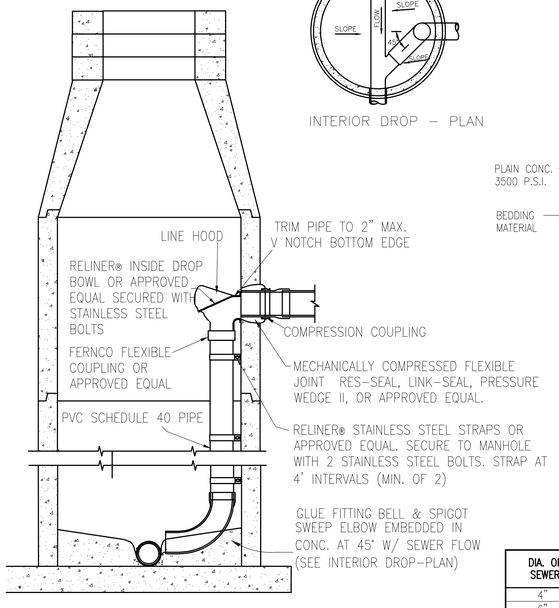

INTERIOR DROP CONNECTION
NOT TO SCALE

DIA. OF SEWER	DIA. OF DROP CONNECTION
4"	4"
6"	4"
8"	6"
10"	8"

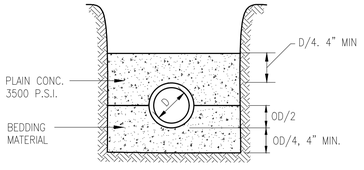

LOAD FACTORS
2.8 PLAIN CONC.
OD + 8" MIN.
11/4 OD

CLASS A

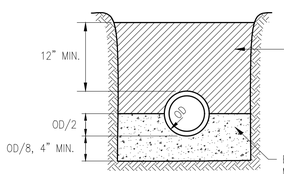

LOAD FACTOR
1.9

CLASS B

MAX. WIDTH OF TRENCH 12" ABOVE TOP OF PIPE
6" THRU 12" PIPE 30" WIDE
15" THRU 36" PIPE – OD+16"
42" THRU 60" PIPE – OD+20"
OVER 60" PIPE OUTSIDE DIA. OF PIPE+24"
MIN. WIDTH OF TRENCH 12" ABOVE THE TOP OF THE PIPE SHALL BE 6" ON EACH SIDE OF PIPE.

PIPE BEDDING DETAILS

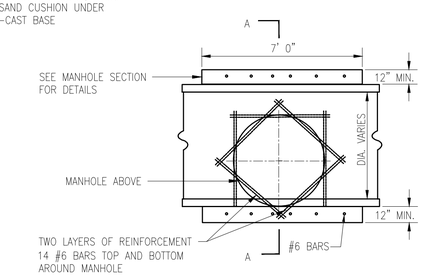

MANHOLE PLAN
48" & LARGER SEWERS
NOT TO SCALE

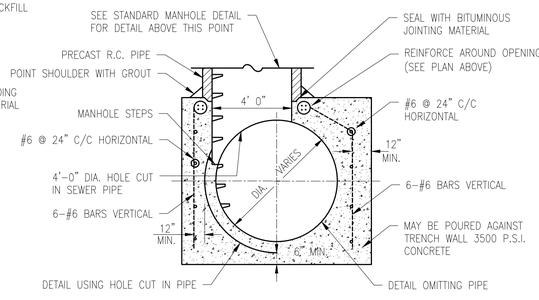

MANHOLE SECTION
48" & LARGER SEWERS
NOT TO SCALE

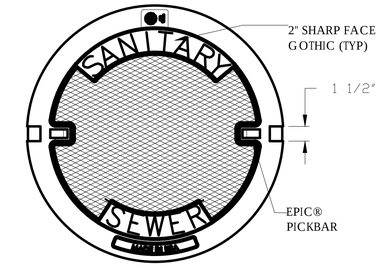

BOTTOM VIEW

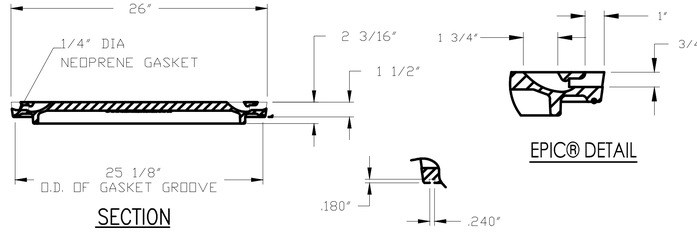

SECTION

EPIC® DETAIL

GROOVE DETAIL

1040 AGS COVER

Know what's **below.** **Call** before you dig.

OHM

REVISIONS

ALL DRAWINGS AND WRITTEN MATERIALS APPEARING HEREIN CONSTITUTE THE ORIGINAL AND UNPUBLISHED WORK OF YCUA AND THE SAME MAY NOT BE DUPLICATED, DISTRIBUTED, OR DISCLOSED WITHOUT PRIOR WRITTEN CONSENT OF YCUA.

STANDARD SANITARY SEWER DETAILS

YPSILANTI COMMUNITY UTILITIES AUTHORITY
2777 STATE ROAD
YPSILANTI, MICHIGAN 48198-9112
(734) 484-4600
FAX: (734) 544-7221
WWW.YCUA.ORG
YCUA ENVIRONMENTAL LEADERS

DATE	SCALE	SHEET
10/25/19	NO SCALE	11

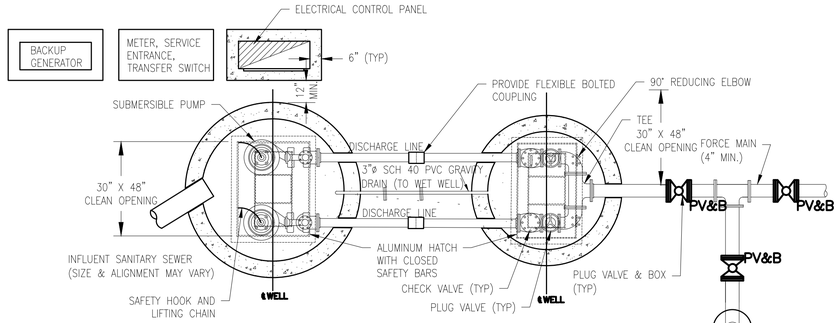

PLAN VIEW

WASTEWATER PUMP STATION

NOT TO SCALE

PV&B = PLUG VALVE AND BOX

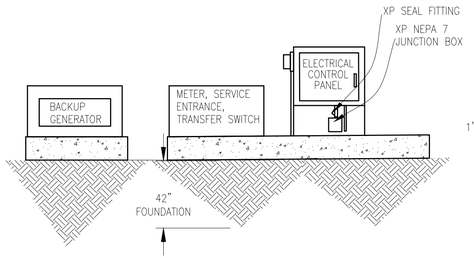

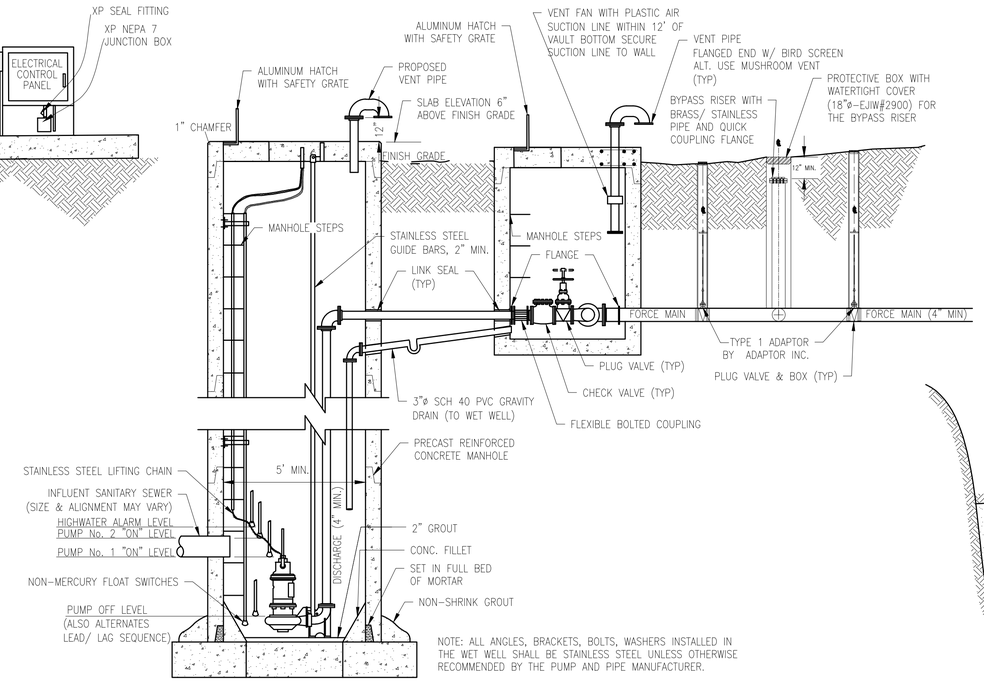

NOTE: ALL ANGLES, BRACKETS, BOLTS, WASHERS INSTALLED IN THE WET WELL SHALL BE STAINLESS STEEL UNLESS OTHERWISE RECOMMENDED BY THE PUMP AND PIPE MANUFACTURER.

PROFILE VIEW

WASTEWATER PUMP STATION

NOT TO SCALE

DETAILS ARE FOR LAYOUT AND GENERALITIES ONLY. THE SPECIFIC COMPONENTS AND EXACT DETAILS MUST BE IDENTIFIED OR CREATED ON A CASE BY CASE BASIS THROUGH A DETAILED SUBMITTAL REVIEW PROCESS.

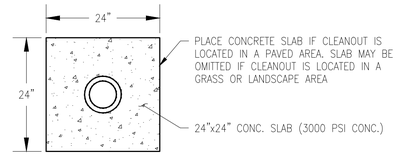

TOP VIEW

ELEVATION

SANITARY SEWER CLEANOUT

NOT TO SCALE

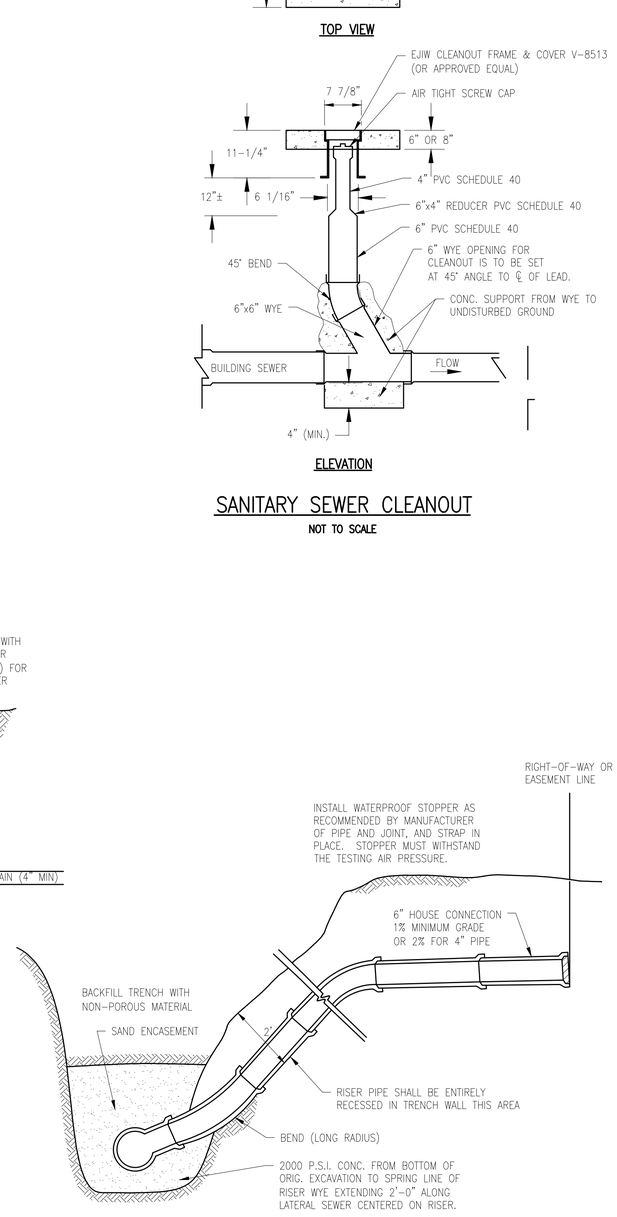

BUILDING SEWER

NOT TO SCALE

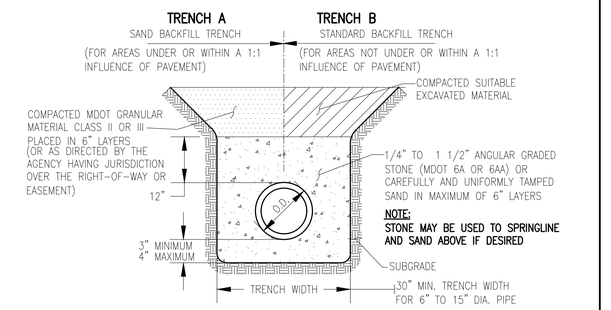

FLEXIBLE PIPE (8" TO 15" DIA SOLID WALL PVC PIPE) STANDARD BEDDING AND TRENCH BACKFILL DETAIL

NOT TO SCALE

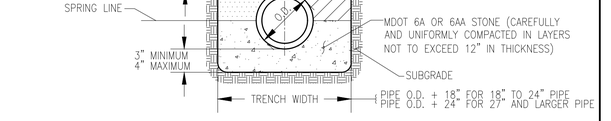

RIGID PIPE (18" DIAMETER AND LARGER) STANDARD BEDDING AND TRENCH BACKFILL DETAIL

NOT TO SCALE

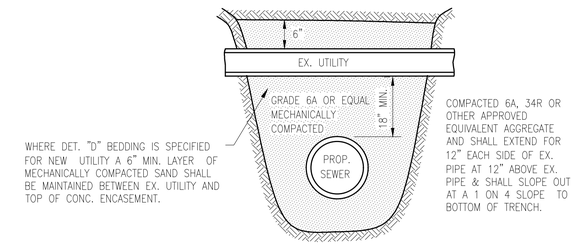

STANDARD PIPE SUPPORT

SANITARY OR STORM

NOT TO SCALE

Know what's **below.** **Call** before you dig.

OHM

REVISIONS

ALL DRAWINGS AND WRITTEN MATERIALS APPEARING HEREIN CONSTITUTE THE ORIGINAL AND UNPUBLISHED WORK OF YCUA AND THE SAME MAY NOT BE DUPLICATED, DISTRIBUTED, OR DISCLOSED WITHOUT PRIOR WRITTEN CONSENT OF YCUA

STANDARD SANITARY SEWER DETAILS

YPSILANTI COMMUNITY UTILITIES AUTHORITY
2777 STATE ROAD
YPSILANTI, MICHIGAN 48198-9112
(734) 484-4600
FAX: (734) 544-7221
WWW.YCUA.ORG
YCUA ENVIRONMENTAL LEADERS

DATE	SCALE	SHEET
10/25/19	NO SCALE	12

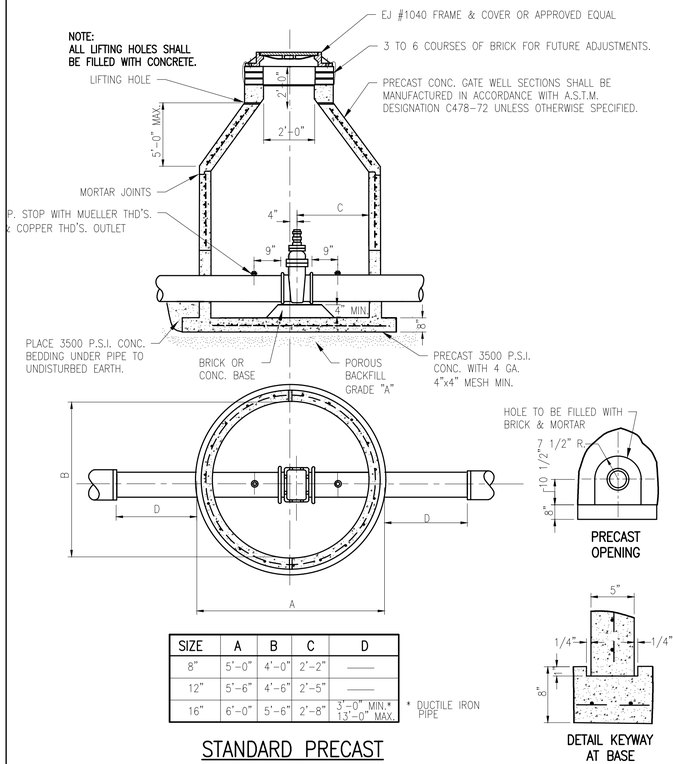

SIZE	A	B	C	D
8"	5'-0"	4'-0"	2'-2"	——
12"	5'-6"	4'-6"	2'-5"	——
16"	6'-0"	5'-6"	2'-8"	3'-0" MIN.* 13'-0" MAX.

* DUCTILE IRON PIPE

STANDARD PRECAST GATE VALVE & WELL
(CONCENTRIC)

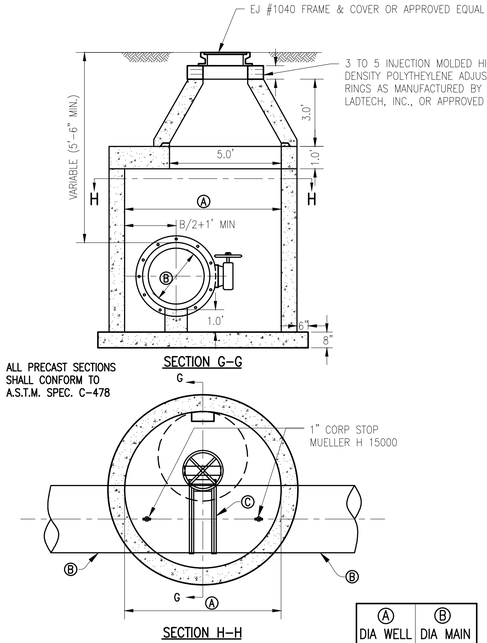

Ⓐ DIA WELL	Ⓑ DIA MAIN
7'-0"	20"
7'-0"	24"
8'-0"	30"
8'-0"	36"

BUTTERFLY VALVE AND WELL
(CONCENTRIC)
NOT TO SCALE

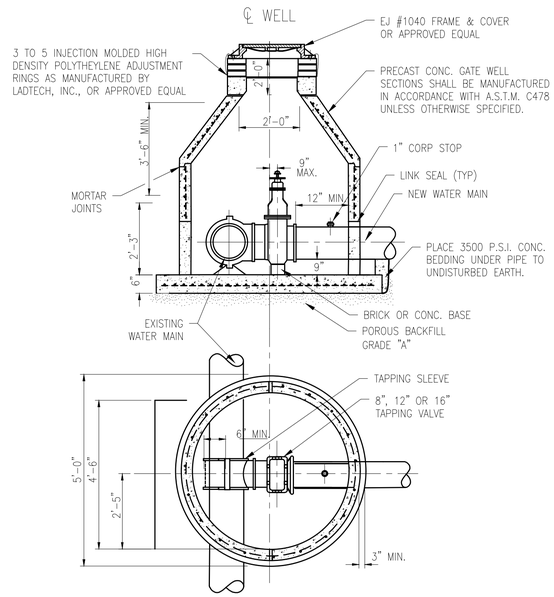

TAPPING SLEEVE, VALVE & WELL
(CONCENTRIC)
NOT TO SCALE

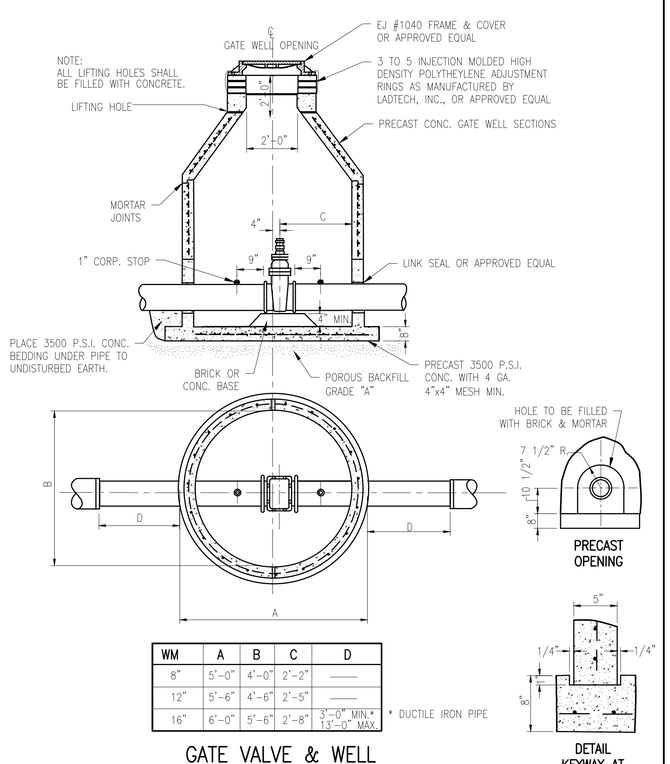

WM	A	B	C	D
8"	5'-0"	4'-0"	2'-2"	——
12"	5'-6"	4'-6"	2'-5"	——
16"	6'-0"	5'-6"	2'-8"	3'-0" MIN.* 13'-0" MAX.

* DUCTILE IRON PIPE

GATE VALVE & WELL
(CONCENTRIC)
NOT TO SCALE

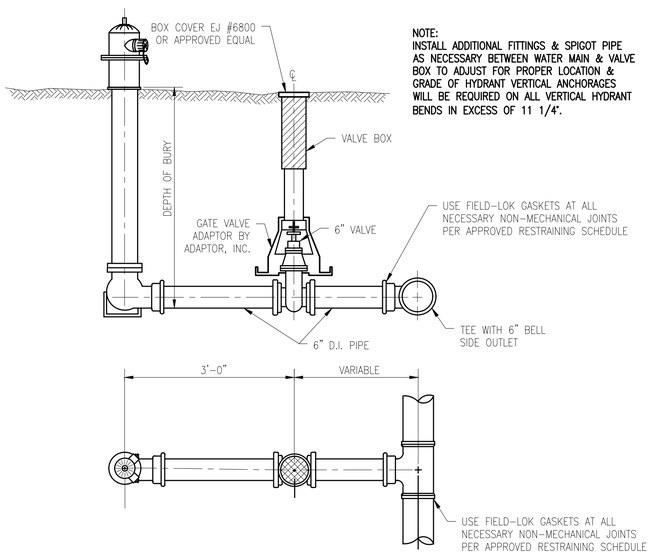

NOTE:
INSTALL ADDITIONAL FITTINGS & SPIGOT PIPE AS NECESSARY BETWEEN WATER MAIN & VALVE BOX TO ADJUST FOR PROPER LOCATION & GRADE OF HYDRANT VERTICAL ANCHORAGES WILL BE REQUIRED ON ALL VERTICAL HYDRANT BENDS IN EXCESS OF 11 1/4°.

STANDARD HYDRANT SETTING
NOT TO SCALE

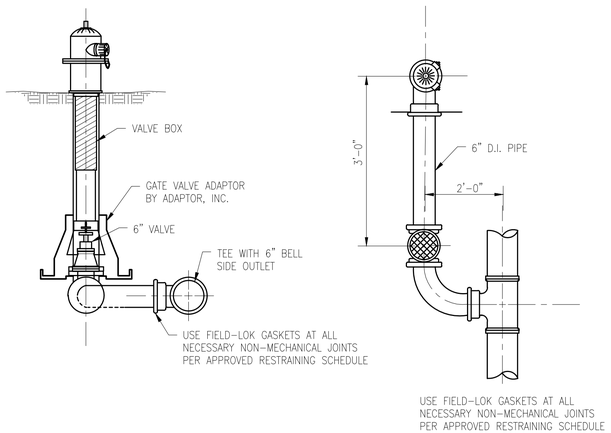

CLOSE COUPLE HYDRANT SETTING
NOT TO SCALE

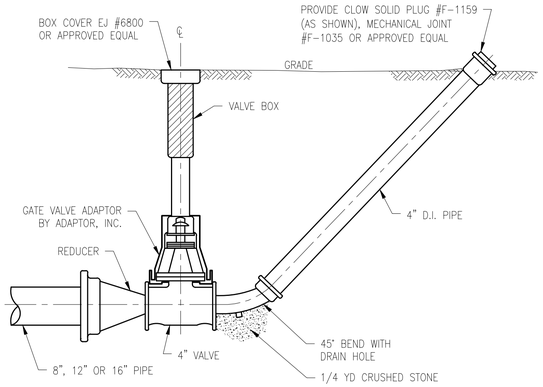

4" BLOWOFF
NOT TO SCALE

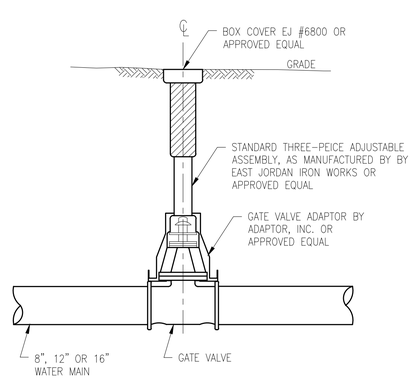

GATE VALVE & BOX
NOT TO SCALE

Know what's **below.**
Call before you dig.

OHM

REVISIONS

ALL DRAWINGS AND WRITTEN MATERIALS APPEARING HEREIN CONSTITUTE THE ORIGINAL AND UNPUBLISHED WORK OF YCUA AND THE SAME MAY NOT BE DUPLICATED, DISTRIBUTED, OR DISCLOSED WITHOUT PRIOR WRITTEN CONSENT OF YCUA

STANDARD WATER MAIN DETAILS

YPSILANTI COMMUNITY UTILITIES AUTHORITY
2777 STATE ROAD
YPSILANTI, MICHIGAN 48198-9112
(734) 484-4600
FAX: (734) 544-7221
WWW.YCUA.ORG
YCUA ENVIRONMENTAL LEADERS

DATE	SCALE	SHEET
09/25/19	NO SCALE	13

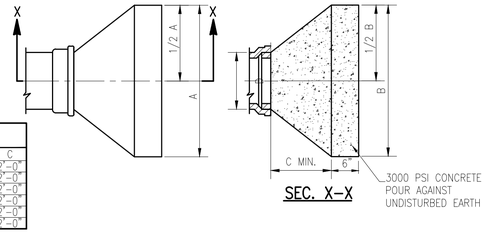

DIA. OF WATER MAIN	THRUST BLOCK		
D	A	B	C
6"	2'-0"	18"	2'-0"
8"	2'-6"	2'-0"	2'-0"
12"	3'-6"	3'-0"	2'-0"
16"	6'-0"	3'-6"	2'-0"
20"	8'-0"	4'-0"	2'-0"
24"	11'-0"	4'-0"	2'-0"

THRUST BLOCK AT PLUG OR HYDRANT SHOE

NOT TO SCALE

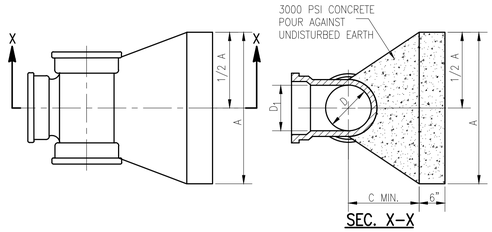

DIA. OF TEE		THRUST BLOCK	
D	D1	A	C
8"	8"	2'-6"	2'0"
12"	8"	2'-6"	2'0"
16"	8"	2'-6"	2'0"
12"	12"	3'-6"	2'0"
16"	12"	3'-6"	2'0"
20"	12"	3'-6"	2'0"
24"	12"	3'-6"	2'0"
16"	16"	6'-0"	2'3"
20"	16"	6'-0"	2'3"
24"	16"	6'-0"	2'3"

THRUST BLOCK AT TAPPING SLEEVE TEE

NOT TO SCALE

NOTE:
CONCRETE THRUST BLOCKS WILL NOT BE PERMITTED EXCEPT BEHIND HYDRANT SHOES AND TAPPING SLEEVES. USE OF CONCRETE THRUST BLOCKS IN OTHER LOCATIONS WILL NOT BE PERMITTED WITHOUT THE WRITTEN APPROVAL OF YCUA. ALL OTHER VERTICAL AND HORIZONTAL BENDS SHALL BE RESTRAINED WITH FIELD–LOK GASKETS OR APPROVED MECHANICAL JOINTS.

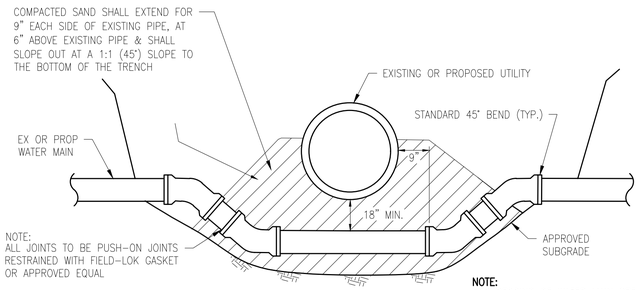

NOTE:
FOR BEDDING OF WATER MAIN SEE STANDARD PIPE SUPPORT DETAIL

WATER MAIN LOWERING

NOT TO SCALE

SPACER END VIEW

NOT TO SCALE

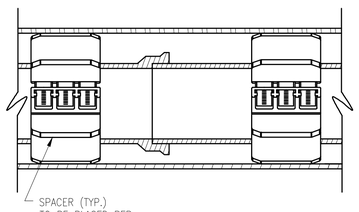

STANDARD CASING SECTION

NOT TO SCALE

NOTES:
1. SPACERS FOR PLACEMENT IN THE ANNULAR SPACE BETWEEN THE CARRIER PIPE AND A CASING PIPE SHALL BE RANGER II AS MANUFACTURED BY PSI OR APPROVED EQUAL.
2. END SEALS SHALL BE MODEL C RUBBER SEAL WITH STAINLESS STEEL BANDS AS MANUFACTURED BY PSI OR APPROVED EQUAL.

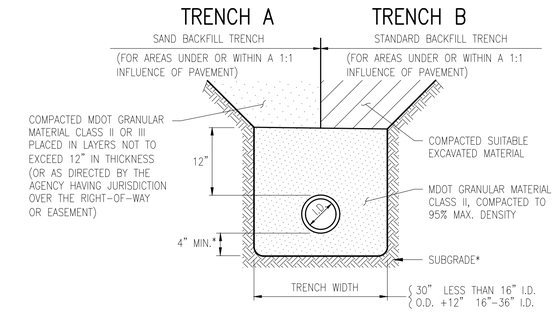

BEDDING AND TRENCH BACKFILL DETAIL FOR WATER MAIN

NOT TO SCALE

*NOTE: IF THE EXISTING SUBGRADE MATERIAL MEETS THE REQUIREMENTS FOR MDOT GRANULAR MATERIAL CLASS II (MINIMUM 4" THICK), THEN THE WATER MAIN MAY BE LAID DIRECTLY ON THE CONPACTED EXISTING SUBGRADE MATERIAL.

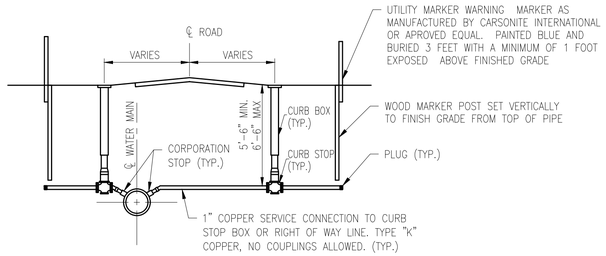

TYPICAL WATER SERVICE

NOT TO SCALE

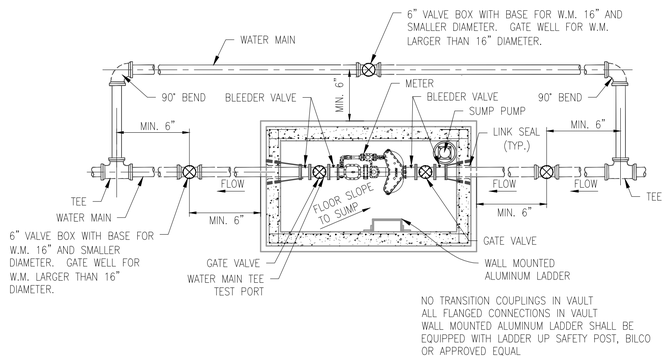

MASTER METER VAULT CONFIGURATION (WITHOUT COVER)

NOT TO SCALE

NOTES:
1. WHERE POSSIBLE THE METER VAULT SHALL BE LOCATED AWAY FROM TRAFFIC AREAS, ROADS, PARKING LOTS, ETC.
2. THE ACCESS HATCH SHALL BE SIZED LARGE ENOUGH TO ACCOMMODATE REMOVAL OF THE LARGEST METER OR THE LARGEST APPURTENANCE FOR MAINTENANCE PURPOSES. THE HATCH SHALL BE MANUFACTURED BY THE BILCO COMPANY. METER VAULT HATCH SHALL BE WATER TIGHT.
3. THE METER VAULT FLOOR SHALL BE SLOPED TO THE SUMP.
4. ELECTRICAL SERVICE SHALL BE SUPPLIED TO THE VAULT.

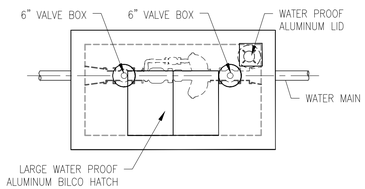

MASTER METER VAULT CONFIGURATION WITH COVER

NOT TO SCALE

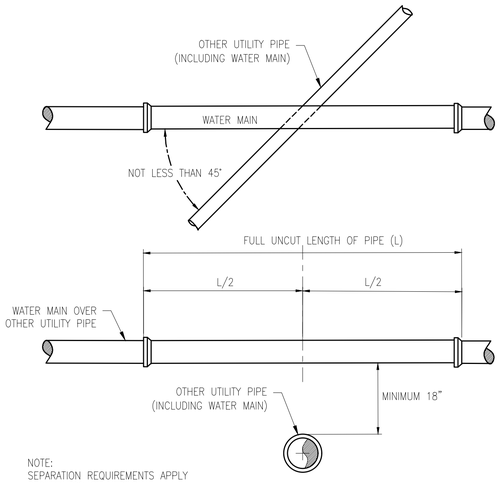

NOTE:
SEPARATION REQUIREMENTS APPLY REGARDLESS OF VERTICAL ALIGNMENTS OF UTILITIES

VERTICAL SEPARATION

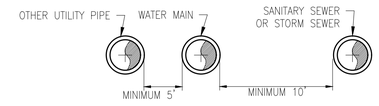

HORIZONTAL SEPARATION

WATER MAIN CROSSING OTHER UTILITIES

NOT TO SCALE

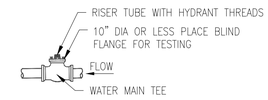

TEST PORT

PIPE DIA	TEST PORT SIZE
6"	6"
8"	8"
10"	10"
12"	10"
16"	10"

811 Know what's **below.** **Call** before you dig.

OHM

ALL DRAWINGS AND WRITTEN MATERIALS APPEARING HEREIN CONSTITUTE THE ORIGINAL AND UNPUBLISHED WORK OF YCUA AND THE SAME MAY NOT BE DUPLICATED, DISTRIBUTED, OR DISCLOSED WITHOUT PRIOR WRITTEN CONSENT OF YCUA

REVISIONS

STANDARD WATER MAIN DETAILS

YPSILANTI COMMUNITY UTILITIES AUTHORITY
2777 STATE ROAD
YPSILANTI, MICHIGAN 48198–9112
(734) 484–4600
FAX: (734) 544–7221
WWW.YCUA.ORG
YCUA ENVIRONMENTAL LEADERS

DATE	SCALE	SHEET
09/25/19	NO SCALE	14

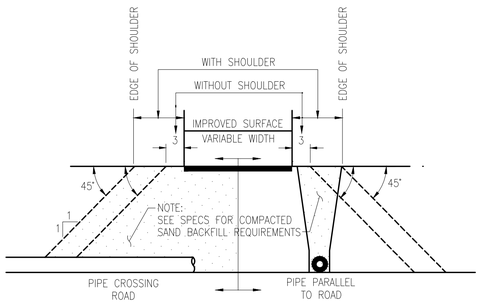

BACKFILL IN THE AREA OF STREETS, ALLEYS SIDEWALKS, DRIVES & PARKING LOTS

NOT TO SCALE

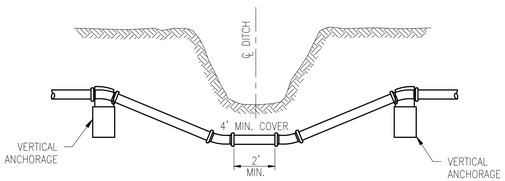

USE FIELD-LOK GASKETS AT ALL NECESSARY NON-MECHANICAL JOINTS PER APPROVED RESTRAINING SCHEDULE

STANDARD DITCH CROSSING

NOT TO SCALE

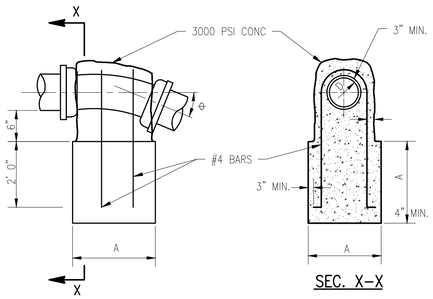

DETAIL OF VERTICAL ANCHORAGE

NOT TO SCALE

DIA. OF WATER MAIN	BEND	A	NUMBER OF BARS
D	θ		
6"	22 1/2°	2'-0"	2
	45°	3'-3"	2
8"	22 1/2°	3'-3"	2
	45°	4'-0"	3
12"	11 1/4°	3'-3"	2
	22 1/2°	4'-0"	3
16"	11 1/4°	3'-3"	2
	22 1/2°	4'-0"	3
20"	11 1/4°	4'-0"	2
	22 1/2°	5'-0"	3
24"	11 1/4°	4'-0"	2
	22 1/2°	5'-0"	3

NOTE:
WHERE CONCRETE ENCASEMENT IS SPECIFIED FOR NEW UTILITY A 6" MINIMUM LAYER OF MECHANICALLY COMPACTED SAND SHALL BE MAINTAINED BETWEEN EX. UTILITY & TOP OF CONCRETE ENCASEMENT

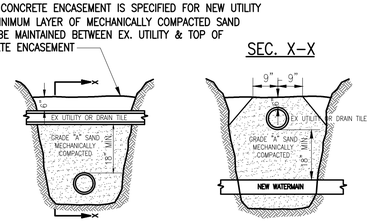

COMPACTED SAND SHALL EXTEND FOR 9" EACH SIDE OF EXISTING PIPE, AT 6" ABOVE EXISTING PIPE & SHALL SLOPE OUT AT A 1:1 (45°) SLOPE TO THE BOTTOM OF THE TRENCH

STANDARD PIPE SUPPORT

NOT TO SCALE

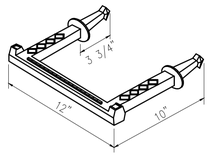

MANHOLE STEP

M.A. PSI-375
USE AS REQUIRED

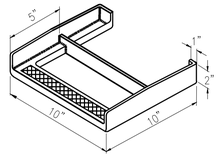

STANDARD MANHOLE STEP

EJ 8500
USE AS REQUIRED

INSTALLED IN ECCENTRIC WELLS ONLY.
CONCENTRIC WELLS WILL NOT BE INSTALLED WITH STEPS.

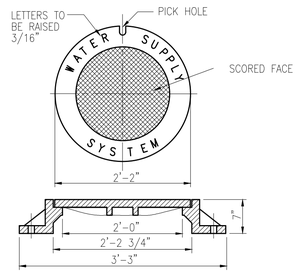

STANDARD FRAME & COVER

EJ #1040
USE AS REQUIRED

PIPE RESTRAINT SCHEDULE

THE FOLLOWING TABLE IS A JOINT RESTRAINT SCHEDULE (DIPRA) FOR GROUND-BURIED DUCTILE IRON OR PVC PIPE. LENGTHS OF PIPE RESTRAINT ARE GIVEN IN FEET.

PIPE DIAMETER	TEES, 90°, PLUGS	45° BENDS	22 ½° BENDS	REDUCERS
6"	40	25	25	30
8"	55	25	25	30
12"	80	35	25	55
16"	100	40	25	60
24"	135	56	25	65

BASED UPON

INTERNAL PRESSURE:	180
PIPE DEPTH:	5
BEDDING CLASS:	TYPE 4
SOIL TYPE:	GOOD SAND
SAFETY FACTOR:	2

1. IF PIPE DIAMETER IS NOT LISTED IN THIS TABLE; THE NEXT LARGEST PIPE SHALL BE USED. THIS TABLE IS BASED ON A TEST PRESSURE OF 180 PSI (OPERATING PRESSURE PLUS WATER HAMMER).
2. FOR OTHER TEST PRESSURES, ALL VALUES TO BE INCREASED OR DECREASED PROPORTIONALLY. THE VALUES PROVIDED OF RESTRAINT LENGTH ARE IN EACH DIRECTION FROM THE POINT OF DEFLECTION OR TERMINATION EXCEPT FOR TEES, AT WHICH ONLY THE BRANCH IN THE DIRECTION OF THE STEM.
3. IF TIE RODS ARE USED, USE FOUR RODS MINIMUM AND ADD 1/8 INCH TO BAR DIAMETER AS CORROSION ALLOWANCE. SIZE REDUCTION IS BASED UPON THE PIPE DIAMETER SHOWN IN THIS TABLE.
4. MANUFACTURER'S RESTRAINT SCHEDULE AND SPECIFIC SITE CONDITIONS MAY MODIFY THE ABOVE SCHEDULE. ANY ALTERNATIVE SCHEDULE SHALL BE SUBMITTED TO YCUA FOR APPROVAL.

TRACER WIRE DETAILS

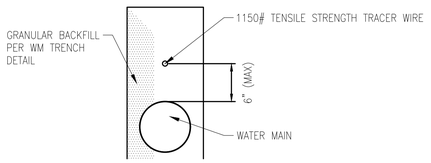

OPEN CUT MAIN LINE TRENCH

NOT TO SCALE

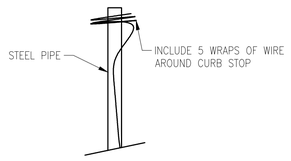

CURB BOX WIRE COIL

NOT TO SCALE

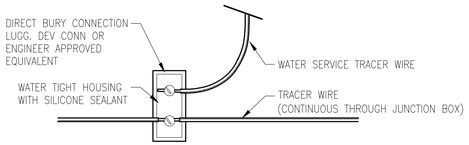

MAIN LINE JUNCTION BOX

NOT TO SCALE

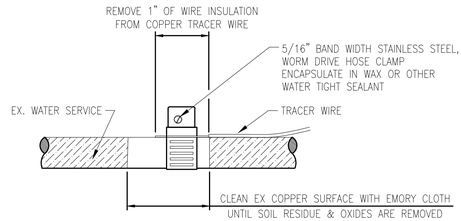

WATER SERVICE TERMINATION

NOT TO SCALE

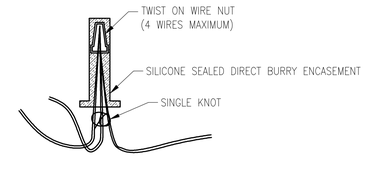

SPLICE CONNECTOR

NOT TO SCALE

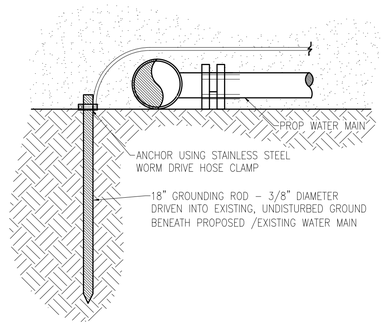

GROUNDING ROD TERMINATION

NOT TO SCALE

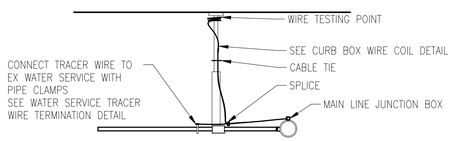

CURB STOP CONNECTION

NOT TO SCALE

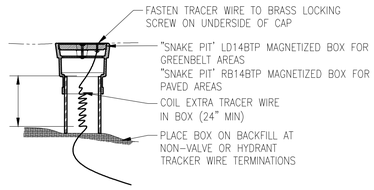

TRACER WIRE TEST POINT

NOT TO SCALE

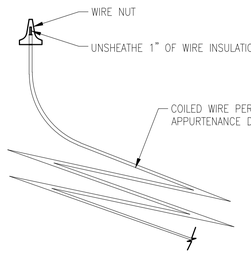

WIRE TESTING POINT

NOT TO SCALE

811 Know what's **below.** **Call** before you dig.

OHM

REVISIONS

ALL DRAWINGS AND WRITTEN MATERIALS APPEARING HEREIN CONSTITUTE THE ORIGINAL AND UNPUBLISHED WORK OF YCUA AND THE SAME MAY NOT BE DUPLICATED, DISTRIBUTED, OR DISCLOSED WITHOUT PRIOR WRITTEN CONSENT OF YCUA

STANDARD WATER MAIN DETAILS

YPSILANTI COMMUNITY UTILITIES AUTHORITY
2777 STATE ROAD
YPSILANTI, MICHIGAN 48198-9112
(734) 484-4600
FAX: (734) 544-7221
WWW.YCUA.ORG
YCUA ENVIRONMENTAL LEADERS

DATE	SCALE	SHEET
09/25/19	NO SCALE	15

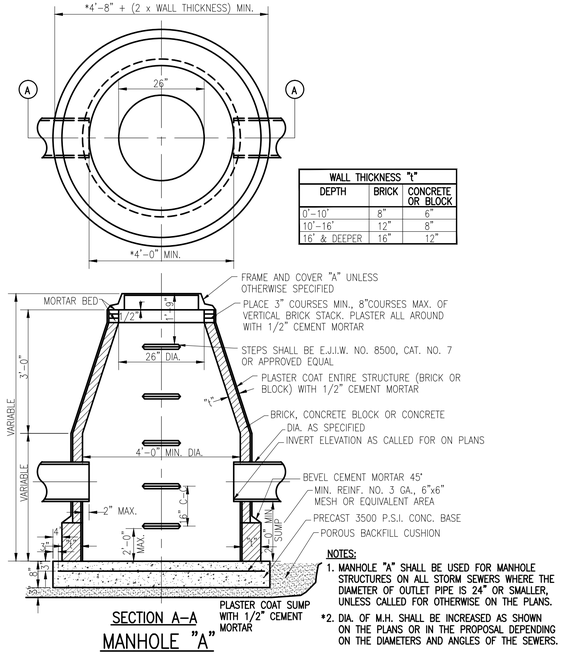

WALL THICKNESS "t"		
DEPTH	BRICK	CONCRETE OR BLOCK
0'-10'	8"	6"
10'-16'	12"	8"
16' & DEEPER	16"	12"

SECTION A-A
MANHOLE "A"

NOTES:
1. MANHOLE "A" SHALL BE USED FOR MANHOLE STRUCTURES ON ALL STORM SEWERS WHERE THE DIAMETER OF OUTLET PIPE IS 24" OR SMALLER, UNLESS CALLED FOR OTHERWISE ON THE PLANS.
*2. DIA. OF M.H. SHALL BE INCREASED AS SHOWN ON THE PLANS OR IN THE PROPOSAL DEPENDING ON THE DIAMETERS AND ANGLES OF THE SEWERS.

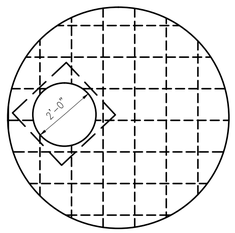

TOP SLAB

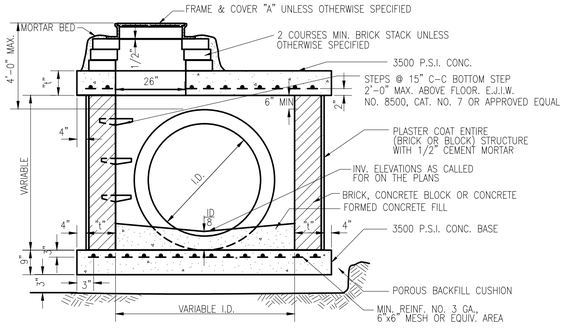

OUTLET I.D.	M.H. D	TOP SLAB "T"	WALLS "t"	REINFORCING STEEL (SLAB)
24" OR LESS	4'-0"	9"	8"	3/4" @ 9" EACH WAY
30"	*4'-0"	9"	8"	3/4" @ 9" EACH WAY
36"	*4'-0"	9"	12"	3/4" @ 9" EACH WAY
42"	*5'-0"	10"	12"	3/4" @ 9" EACH WAY
48" 54"	*6'-0"	11"	12"	7/8" @ 9" EACH WAY

TYPICAL SECTION
MANHOLE "D"

M.H. D	TOP SLAB "T"	WALLS "t"	REINFORCING STEEL (SLAB)
7'-0"	12"	12"	7/8" @ 9" EACH WAY
8'-0"	12"	12"	1" @ 9" EACH WAY

NOTES:
*1. DIA. SHALL BE INCREASED AS SHOWN ON PLANS OR IN THE PROPOSAL DEPENDING ON THE ANGLE OF THE SEWERS.
2. MH. "D" SHALL BE USED WHERE THE DEPTH OF COVER FROM THE TOP OF CASTING TO THE TOP OF SEWER IS LESS THAN 4'-0", MH. "D" SHALL BE CONSTRUCTED WITH A 2' SUMP WHERE DIAMETER OF OUTLET SEWER IS 24" OR LESS.

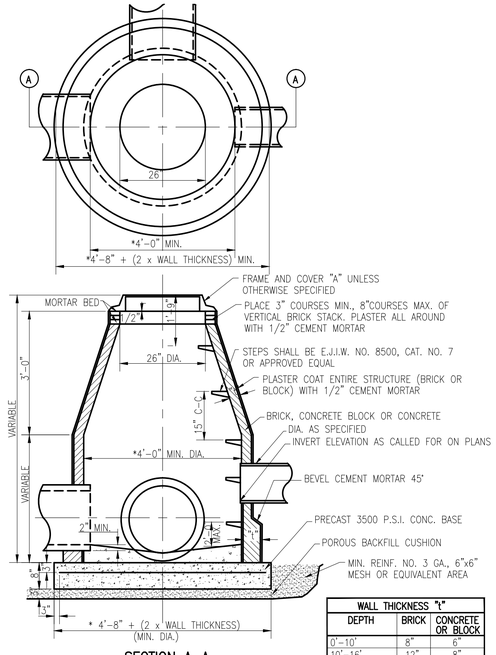

WALL THICKNESS "t"		
DEPTH	BRICK	CONCRETE OR BLOCK
0'-10'	8"	6"
10'-16'	12"	8"
16' & DEEPER	16"	12"

SECTION A-A
MANHOLE "B"

NOTES:
1. MANHOLE "B" SHALL BE USED FOR MANHOLE STRUCTURES ON ALL STORM SEWERS WHERE THE DIAMETER OF OUTLET PIPE IS 24" OR SMALLER, UNLESS CALLED FOR OTHERWISE ON THE PLANS.
*2. DIA. OF M.H. SHALL BE INCREASED AS SHOWN ON THE PLANS OR IN THE PROPOSAL DEPENDING ON THE DIAMETERS AND ANGLES OF THE SEWERS.

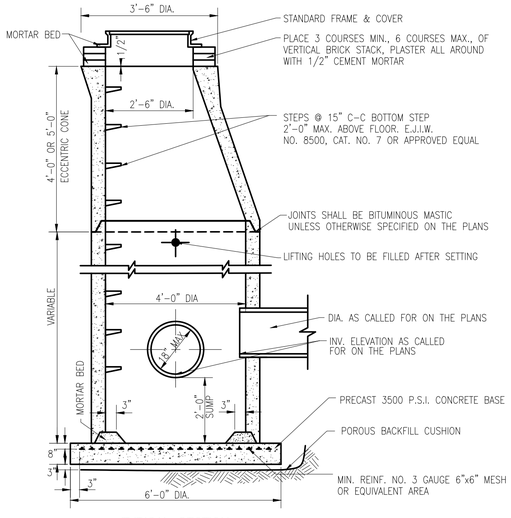

TYPICAL SECTION
PRECAST MANHOLE "E"

NOTES:
1. THIS MANHOLE SHALL BE USED ONLY WHEN MEETING CONDITIONS STATED IN THE "GENERAL MANHOLE NOTES", ITEM NO. 2A
2. PRECAST UNITS SHALL MEET THE REQUIREMENTS SPECIFIED BY A.S.T.M. C-478-68.

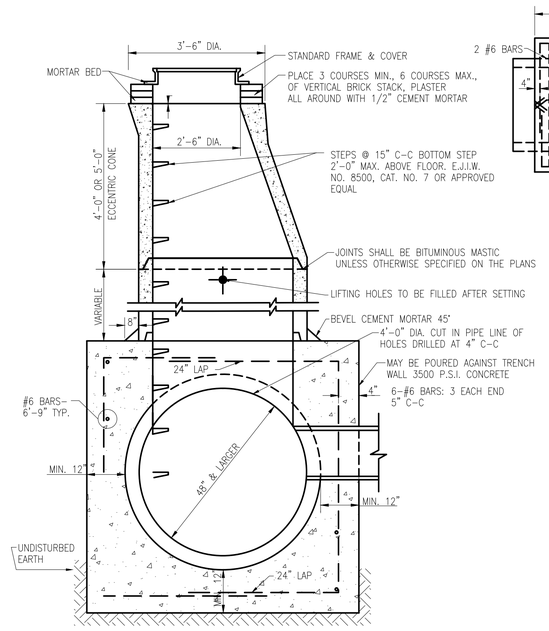

TYPICAL SECTION
PRECAST MANHOLE "C"

NOTES:
1. MANHOLE "C" SHALL BE USED FOR MANHOLE STRUCTURES ON ALL STORM SEWERS WHERE 48" OR LARGER DIA. PIPES INTERSECT.
2. PRECAST UNITS SHALL MEET THE REQUIREMENTS SPECIFIED BY A.S.T.M. C-478-68.

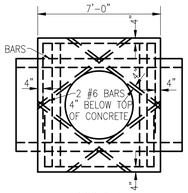

ROOF PLAN
SCALE: 1/4"=1'

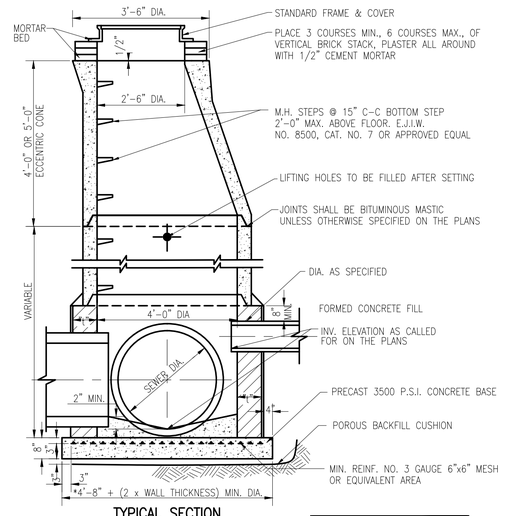

WALL THICKNESS "t"		
DEPTH	BRICK	CONCRETE OR BLOCK
0'-10'	8"	6"
10'-16'	12"	8"
16' & DEEPER	16"	12"

TYPICAL SECTION
PRECAST MANHOLE "F"

NOTES:
1. THIS MANHOLE SHALL BE USED ONLY WHEN MEETING CONDITIONS STATED IN THE "GENERAL MANHOLE NOTES", ITEM NO. 2A
2. PRECAST UNITS SHALL MEET REQUIREMENTS SPECIFIED BY A.S.T.M. C-478-68.
*3. DIAMETER OF MANHOLE SHALL BE INCREASED AS SHOWN ON PLANS OR IN THE PROPOSAL, DEPENDING ON THE DIAMETERS AND ANGLES OF THE SEWERS.

GENERAL NOTES FOR
STORM SEWER MANHOLES

1. ALL MATERIALS AND WORKMANSHIP SHALL BE IN ACCORDANCE WITH THE CURRENT STANDARDS AND SPECIFICATIONS OF THE TOWNSHIP OF YPSILANTI AND YCUA.
2. CONTRACTOR SHALL CONSTRUCT MANHOLES WITH PRECAST REINFORCED CONCRETE UNITS ("E", "F", AND "I") IN LIEU OF CONCRETE, BRICK AND BLOCK MANHOLES ("A" AND "B") IN ACCORDANCE WITH THE FOLLOWING CONDITIONS:
   A. MAXIMUM DIAMETER OF SEWER OUTLET IN ANY PRECAST UNIT SHALL BE 18" (MANHOLE "E" ONLY).
   B. NO OPENINGS SHALL BE MADE IN PRECAST UNITS WHICH WOULD LEAVE LESS THAN 24" OF UNDISTURBED PRECAST PIPE OR WOULD REMOVE MORE THAN 30% OF THE CIRCUMFERENCE ALONG ANY HORIZONTAL PLANE.
   C. STRUCTURES FOR SEWERS LARGER THAN 18", OR THOSE NOT MEETING THE OPENING REQUIREMENTS, SHALL BE BUILT OF BLOCK OR BRICK UP TO A MINIMUM OF 8" ABOVE THE TOP OF SEWER, WITH PRECAST UNITS BEING USED ABOVE THIS POINT. WHERE PRECAST UNITS REST ON THE BLOCK OR BRICK, THE GROOVE IN THE PRECAST UNIT SHALL BE FILLED WITH MORTAR.
   D. OPENINGS FOR THE OUTLET SEWER SHALL BE PRECAST WITH A DIAMETER OF 3 INCHES LARGER THAN THE OUTSIDE DIAMETER OF THE OUTLET PIPE. ALL OTHER OPENINGS SHALL BE MADE IN THE FIELD AFTER MANHOLE HAS BEEN CONSTRUCTED.
3. ALL VERTICAL OPENINGS IN CONCRETE BLOCK STRUCTURE WALLS SHALL BE COMPLETELY FILLED WITH MORTAR. ALL VERTICAL WALL JOINTS SHALL BE CEMENT POINTED.
4. A "POURED 3500 P.S.I. CONCRETE BASE" WITHOUT STEEL REINFORCEMENT MAY BE SUBSTITUTED FOR PRECAST BASE WHEN APPROVED BY THE TOWNSHIP ENGINEER. A POROUS BACKFILL CUSHION WILL NOT BE REQUIRED UNDER THE POURED BASE UNLESS CONTRACTOR HAS EXCAVATED BELOW THE REQUIRED ELEVATION, AT WHICH TIME THE ENGINEER WILL DECIDE AS TO THE MERITS OF INCREASING THE THICKNESS OF THE CONCRETE BASE OR THE USE OF A POROUS BACKFILL CUSHION.
5. WHERE UNSTABLE GROUND CONDITIONS ARE ENCOUNTERED, SLAG OR STONE BEDDING SHALL BE USED AS DIRECTED BY THE ENGINEER IN ORDER TO PROVIDE A STABLE FOUNDATION FOR PIPE AND MANHOLES.
6. ALL PIPES ENTERING OR LEAVING A MANHOLE SHALL BE ADEQUATELY SUPPORTED BY POURING 2500 P.S.I. CONCRETE FILL FROM UNDISTURBED EARTH TO SPRINGLINE.
7. WHEREVER EXISTING MANHOLES OR SEWER PIPE ARE TO BE TAPPED, DRILL HOLES AT 4" CENTER TO CENTER AROUND PERIPHERY OR OPENING TO CREATE A PLANE OF WEAKNESS BEFORE BREAKING SECTION OUT.

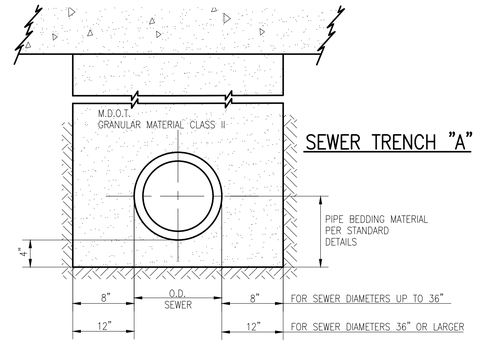

SEWER TRENCH "A"

NOTES:
1. TRENCH "A" SHALL BE USED UNDER ROAD SURFACES, PAVEMENT, SIDEWALK, CURB, AGGREGATE & PAVED DRIVES AND WHERE THE EDGE OF TRENCH IS WITHIN 3 FEET OF THE PAVEMENT
2. GRANULAR MATERIAL SHALL BE PLACED BY THE "CONTROLLED DENSITY METHOD" OR OTHER MEANS HAVING APPROVAL OF THE ENGINEER AND IS TO BE COMPACTED TO 95% OF MAXIMUM UNIT WEIGHT

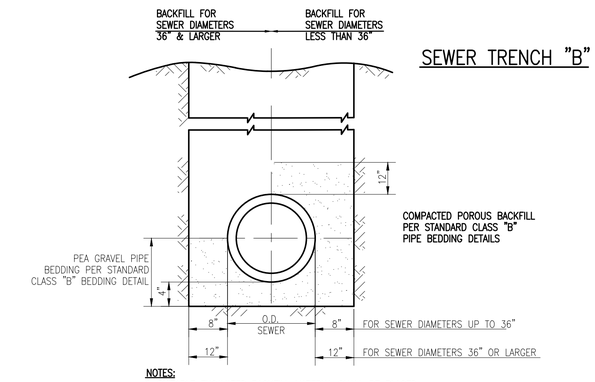

SEWER TRENCH "B"

NOTES:
1. SUITABLE EXCAVATED BACKFILL MATERIAL SHALL BE PLACED IN ONE FOOT LAYERS AND COMPACTED BY MECHANICAL TAMPING OR OTHER EFFECTIVE MEANS HAVING APPROVAL OF THE ENGINEER, TO A DENSITY EQUIVALENT TO THE UNDISTURBED ADJACENT SOIL
2. TRENCH "B" SHALL BE USED UNDER CONDITIONS OTHER THAN SPECIFIED FOR TRENCH "A"

OHM
WWW.OHM-ADVISORS.COM

DATE | CADD | ENG / ARCH | PROJ. MGR | SECTION | TOWN | RANGE | CLIENT. | REVISIONS: | REVISIONS: | SCALE H: V: | JOB # | HORIZ DATUM | VERT DATUM | CITY/VILLAGE/TOWNSHIP | COUNTY

COPYRIGHT 2009 OHM ALL DRAWINGS AND WRITTEN MATERIALS APPEARING HEREIN CONSTITUTE THE ORIGINAL AND UNPUBLISHED WORK OF OHM AND THE SAME MAY NOT BE DUPLICATED, DISTRIBUTED, OR DISCLOSED WITHOUT PRIOR WRITTEN CONSENT OF OHM

YPSILANTI TOWNSHIP / Y.C.U.A.
STANDARD STORM SEWER DETAILS

SHEET
16

DRAWING PATH: S:\CIVIT\Ypsilanti\Twpstandards\cadd\YpsiTownSTM1_2436.dwg Jun 05, 2015 - 1:19pm

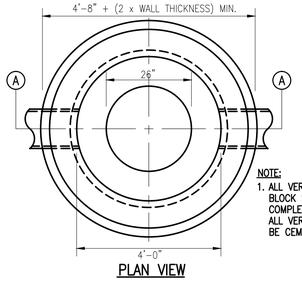

NOTE:
1. ALL VERTICAL HOLES IN CONCRETE BLOCK STRUCTURE WALL SHALL BE COMPLETELY FILLED WITH MORTAR. ALL VERTICAL WALL JOINTS SHALL BE CEMENT POINTED.

PLAN VIEW

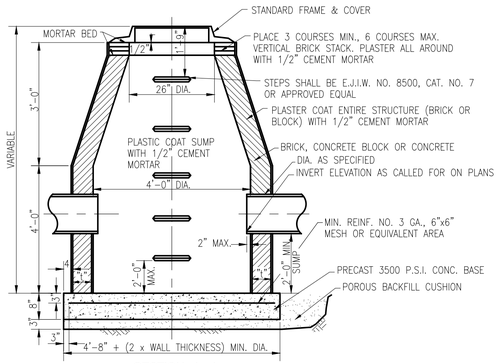

SECTION A–A
CATCH BASIN "A"

NOTE:
1. STANDARD INLET WILL BE USED ONLY WHEN OUTLETTING TO A STRUCTURE HAVING A SUMP OR WHEN OUTLETTING TO A DITCH

PLAN VIEW

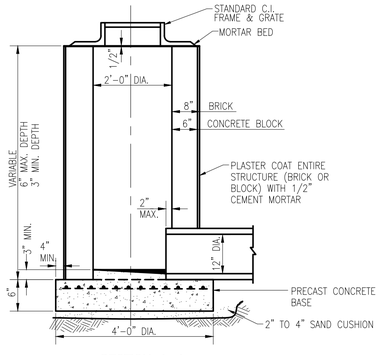

SECTION A–A
STANDARD INLET

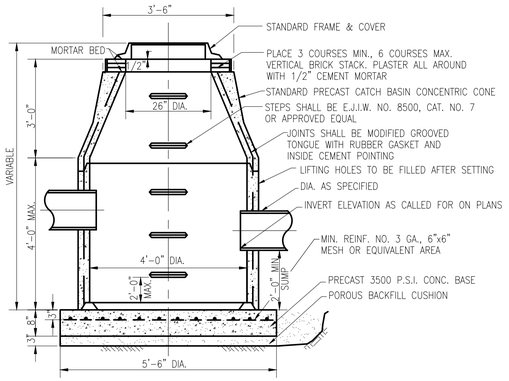

CROSS-SECTION
CATCH BASIN "B"

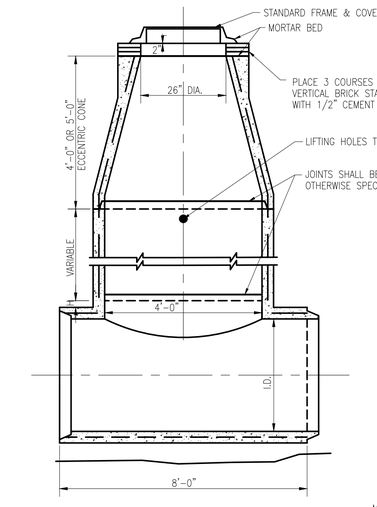

NOTE:
1. PRECAST UNITS SHALL MEET THE REQUIREMENTS SPECIFIED BY A.S.T.M. C-478-68. ALL MANHOLE TEE SECTIONS SHALL BE REINFORCED TO A.S.T.M. C-76, CLASS IV SPECIFICATIONS

H DIMENSION

I.D.	42"	48"	54"	60"	66"	72"	78"	84"	OVER 84"
H	13"	6 1/2"	6 1/2"	1"	1 3/4"	2 1/2"	4"	6"	7"

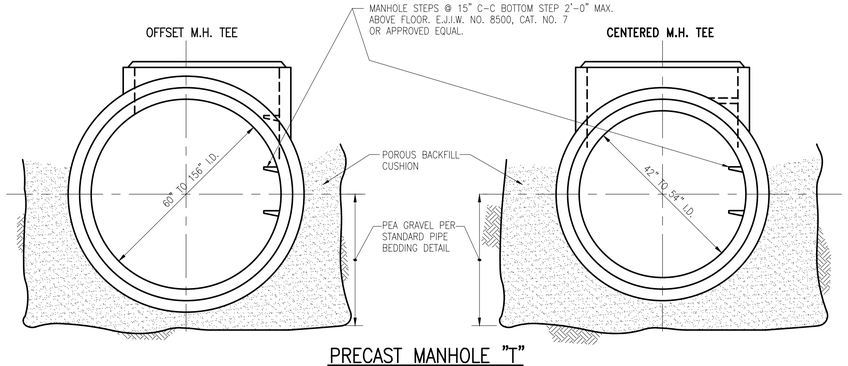

PRECAST MANHOLE "T"

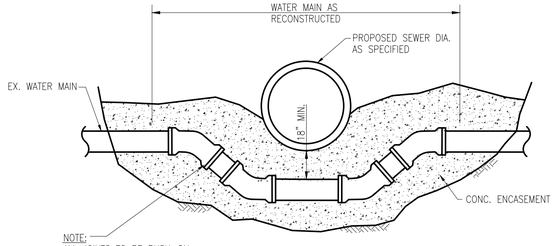

NOTE:
ALL JOINTS TO BE PUSH-ON JOINTS RESTRAINED WITH FIELD-LOK GASKET OR APPROVED EQUAL

WATER MAIN CROSSING (DUCTILE IRON CL. IV)

WATER MAIN CROSSING

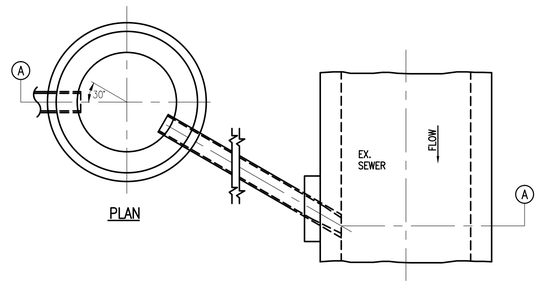

PLAN

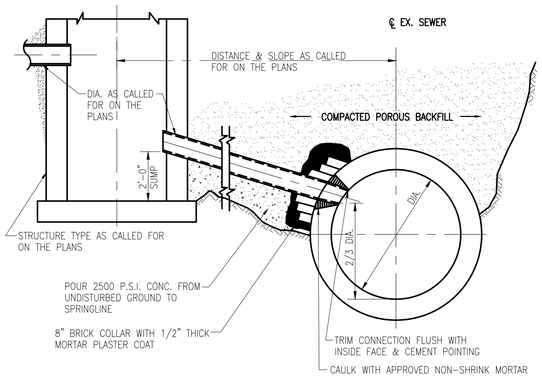

SECTION A–A
TYPICAL CONNECTIONS TO EXISTING SEWERS

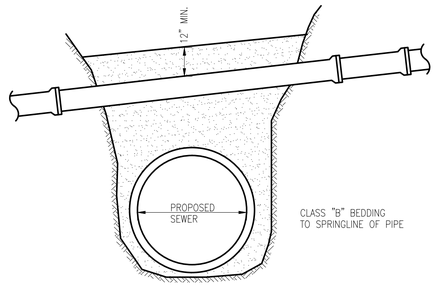

HOUSE CONNECTION CROSSING

NOTE:
1. M.D.O.T. GRANULAR MATERIAL CLASS II PLACED IN 6" LAYERS AND COMPACTED TO A MINIMUM OF 95% OF ITS MAXIMUM UNIT WEIGHT TO A HEIGHT OF 12" ABOVE THE TOP OF THE SEWER LEAD.

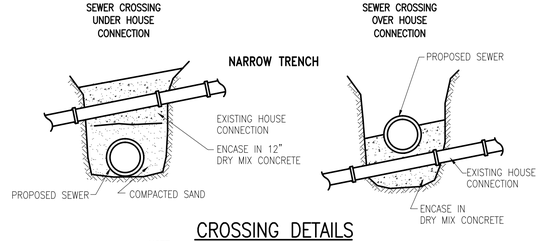

CROSSING DETAILS

NOTE:
1. WHEN UNSTABLE GROUND CONDITIONS ARE ENCOUNTERED STONE, SLAG OR DRY MIX CONCRETE SHALL BE USED TO BACKFILL THE TRENCH TO A HEIGHT 12" ABOVE THE TOP OF THE SEWER LEAD.

OHM
WWW.OHM-ADVISORS.COM

SCALE H: V: | JOB # | HORZ DATUM | VERT DATUM
CITY/VILLAGE/TOWNSHIP | REVISIONS
COUNTY
CLIENT:
TOWN | RANGE | SECTION
PROJ MGR | ENG / ARCH | CADD | DATE
REVISIONS:
REVISIONS:

COPYRIGHT 2009 OHM ALL DRAWINGS AND WRITTEN MATERIALS APPEARING HEREIN CONSTITUTE THE ORIGINAL AND UNPUBLISHED WORK OF OHM AND THE SAME MAY NOT BE DUPLICATED, DISTRIBUTED, OR DISCLOSED WITHOUT PRIOR WRITTEN CONSENT OF OHM

YPSILANTI TOWNSHIP / Y.C.U.A.
STANDARD STORM SEWER DETAILS

SHEET
17

DRAWING PATH: S:\CIVIT\Ypsilanti Twp\standards\cadd\Ypsi Twp STND_2436.dwg Jun 05, 2015 - 1:20pm

OPINION OF PROBABLE CONSTRUCTION COST

ORCHARD, HILTZ & McCLIMENT, INC.
34000 Plymouth Road, Livonia, Michigan, 48150
Telephone: (734) 522-6711 FAX: (734) 466-4557

PROJECT: Ridge Rd Sidewalk
LOCATION: W Side of Ridge Rd b/w Holmes Rd and Mott Rd
WORK: Sidewalk Construction and Rehabilitation

DATE: August 2, 2023
PROJECT #: 0098-23-0020
ESTIMATOR:
CHECKED BY:
CURRENT ENR:

ITEM CODE	DESCRIPTION	UNIT	TOTAL	UNIT PRICE	COST
	CATEGORY 1 - Ridge Rd Sidewalk				
1507051	Audio Video Route Survey	LS	1	$ 2,000.00	$ 2,000.00
1507051	Mobilization, Max. 5%	LS	1	$ 18,215.10	$ 18,215.10
1507051	Traffic Maintenance and Control	LS	1	$ 10,000.00	$ 10,000.00
2020002	Tree, Rem, 19 inch to 36 inch	Ea	3	$ 750.00	$ 2,250.00
2020004	Tree, Rem, 6 inch to 18 inch	Ea	2	$ 500.00	$ 1,000.00
2040020	Curb and Gutter, Rem	Ft	68	$ 20.00	$ 1,360.00
2040025	Fence, Rem	Ft	200	$ 5.00	$ 1,000.00
2040050	Pavt, Rem	Syd	190	$ 20.00	$ 3,800.00
2040055	Sidewalk, Rem	Syd	608	$ 12.00	$ 7,296.00
2047050	Exploratory Excavation	Ea	3	$ 500.00	$ 1,500.00
2047050	Preserve Utility Marker	Ea	2	$ 350.00	$ 700.00
2057002	Station Grading, Case A	Sta	17	$ 2,700.00	$ 45,900.00
2057002	Station Grading, Case B	Sta	12	$ 1,500.00	$ 18,000.00
2080020	Erosion Control, Inlet Protection, Fabric Drop	Ea	7	$ 140.00	$ 980.00
2080036	Erosion Control, Silt Fence	Ft	1927	$ 3.00	$ 5,781.00
2087001	Sprinkler Line, Salv and Reset	Ft	100	$ 7.00	$ 700.00
2087050	Sprinkler Head, Salv and Reset	Ea	12	$ 275.00	$ 3,300.00
3020016	Aggregate Base, 6 inch	Syd	1182	$ 10.00	$ 11,820.00
3060020	Maintenance Gravel	Ton	40	$ 35.00	$ 1,400.00
4037050	Utility Structure Cover, Adj	Ea	4	$ 1,000.00	$ 4,000.00
5010025	Hand Patching	Ton	20	$ 300.00	$ 6,000.00
5012025	HMA, 4EML	Ton	7	$ 150.00	$ 1,050.00
6020100	Conc Pavt, Nonreinf, 6 inch	Syd	80	$ 50.00	$ 4,000.00
8010007	Driveway, Nonreinf Conc, 8 inch	Syd	169	$ 110.00	$ 18,590.00
8020038	Curb and Gutter, Conc, Det F4	Ft	143	$ 50.00	$ 7,150.00
8020050	Driveway Opening, Conc, Det M	Ft	76	$ 30.00	$ 2,280.00
8020075	Spillway, Conc	Ft	28	$ 125.00	$ 3,500.00
8030010	Detectable Warning Surface	Ft	20	$ 100.00	$ 2,000.00
8030030	Curb Ramp Opening, Conc	Ft	28	$ 30.00	$ 840.00
8030044	Sidewalk, Conc, 4 inch	Sft	15071	$ 7.00	$ 105,497.00
8032002	Curb Ramp, Conc, 6 inch	Sft	300	$ 25.00	$ 7,500.00
8080011	Fence, Chain Link, 48 inch	Ft	200	$ 25.00	$ 5,000.00
8107050	Sign, Salv and Reset	Ea	1	$ 300.00	$ 300.00
8110110	Pavt Mrkg, Polyurea, 12 inch, Crosswalk	Ft	212	$ 12.00	$ 2,544.00
8167002	Turf Establishment	Sta	32	$ 1,000.00	$ 32,000.00
8167060	Permit Allowance	Dlr	1	$ 3,000.00	$ 3,000.00
	CATEGORY 2 - Mid-Block Crossing (Alt A)				
2040050	Pavt, Rem	Syd	233	$ 20.00	$ 4,660.00
2057002	Station Grading, Case A	Sta	3	$ 2,700.00	$ 8,100.00

OPINION OF PROBABLE CONSTRUCTION COST

ORCHARD, HILTZ & McCLIMENT, INC.
34000 Plymouth Road, Livonia, Michigan, 48150
Telephone: (734) 522-6711 FAX: (734) 466-4557

PROJECT: Ridge Rd Sidewalk
LOCATION: W Side of Ridge Rd b/w Holmes Rd and Mott Rd
WORK: Sidewalk Construction and Rehabilitation

DATE: August 2, 2023
PROJECT #: 0098-23-0020
ESTIMATOR:
CHECKED BY:
CURRENT ENR:

ITEM CODE	DESCRIPTION	UNIT	TOTAL	UNIT PRICE	COST
2080036	Erosion Control, Silt Fence	Ft	134	$ 3.00	$ 402.00
5012025	HMA, 4EML	Ton	17	$ 150.00	$ 2,550.00
8010007	Driveway, Nonreinf Conc, 8 inch	Syd	28	$ 110.00	$ 3,080.00
8030010	Detectable Warning Surface	Ft	10	$ 100.00	$ 1,000.00
8030044	Sidewalk, Conc, 4 inch	Sft	136	$ 7.00	$ 952.00
8030046	Sidewalk, Conc, 6 inch	Sft	1553	$ 10.00	$ 15,530.00
8032002	Curb Ramp, Conc, 6 inch	Sft	150	$ 25.00	$ 3,750.00
8110110	Pavt Mrkg, Polyurea, 12 inch, Crosswalk	Ft	20	$ 12.00	$ 240.00

SUBTOTAL FOR CATEGORY 1 - Ridge Rd Sidewalk	$ 342,253.10
SUBTOTAL FOR CATEGORY 2 - Mid-Block Crossing (Alt A)	$ 40,264.00
CONTINGENCY (10%)	$ 38,251.71
TOTAL OPINION OF PROBABLE CONSTRUCTION COST =	**$ 420,768.81**

OTHER BUSINESS

BOARD MEMBER UPDATES